MECHANISMS in Modern Engineering Design

A Handbook for Engineers, Designers and Inventors

by IVAN I. ARTOBOLEVSKY, D.Sc.(Eng.)
Member, USSR Academy of Sciences

Volume III

Gear Mechanisms

Translated from the Russian by Nicholas Weinstein

MIR PUBLISHERS MOSCOW

This page is intentionally left blank

First published 1977
Revised from the 1973 Russian edition

На английском языке

© Издательство «Наука», 1973 г., с изменениями
© English translation, Mir Publishers, 1977

This page is intentionally left blank

CONTENTS

Preface 9
Table 1. Classification of Mechanisms Based on Structural Features 11
Table 2. Classification of Mechanisms Based on Functional Features 15

SECTION THIRTEEN. SIMPLE GEAR MECHANISMS 19

1. General-Purpose Three-Link Mechanisms (2289 through 2344) 21
2. General-Purpose Four-Link Mechanisms (2345 through 2352) 70
3. Dwell Mechanisms (2353 through 2379) 76
4. Mechanisms for Generating Curves (2380 through 2384) . 99
5. Sorting and Feeding Mechanisms (2385 through 2391) . 103
6. Link-Length Adjustment Mechanisms (2392, 2393 and 2394) 108
7. Clutch and Coupling Mechanisms (2395 and 2396) 111
8. Indexing Mechanisms (2397) 113
9. Gripping, Clamping and Expanding Mechanisms (2398) . 114
10. Mechanisms of Materials Handling Equipment (2399) . . 115
11. Mechanisms of Other Functional Devices (2400, 2401 and 2402) 116

SECTION FOURTEEN. LEVER-GEAR MECHANISMS . . 119

1. General-Purpose Four-Link Mechanisms (2403 through 2411) 121
2. General-Purpose Five-Link Mechanisms (2412 through 2433) 130
3. General-Purpose Multiple-Link Mechanisms (2434 through 2465) 150
4. Mechanisms for Generating Curves (2466 through 2485) . 182
5. Mechanisms for Mathematical Operations (2486 through 2506) 202
6. Dwell Mechanisms (2507 through 2518) 224
7. Operating Claw Mechanisms of Motion Picture Cameras (2519 through 2522) 236

8. Guiding Mechanisms and Inversors (2523 through 2528) 240
9. Mechanisms of Measuring and Testing Devices (2529 through 2532) 246
10. Piston Machine Mechanisms (2533 and 2534) 250
11. Mechanisms of Vibrating Machines and Devices (2535 and 2536) 252
12. Gripping, Clamping and Expanding Mechanisms (2537 and 2538) 253
13. Clutch and Coupling Mechanisms (2539 and 2540) 255
14. Switching, Engaging and Disengaging Mechanisms (2541) 257
15. Link-Length Adjustment Mechanisms (2542) 258
16. Mechanisms of Other Functional Devices (2543 through 2576) 259

SECTION FIFTEEN. PIN-GEAR MECHANISMS 291

1. General-Purpose Three-Link Mechanisms (2577 through 2591) 293
2. General-Purpose Multiple-Link Mechanisms (2592 through 2595) 306
3. Dwell Mechanisms (2596 through 2622) 310
4. Geneva Wheel Mechanisms (2623 through 2652) 333
5. Sorting and Feeding Mechanisms (2653 and 2654) 363
6. Mechanisms of Other Functional Devices (2655 through 2659) 365

SECTION SIXTEEN. RATCHET-GEAR MECHANISMS . . 371

1. General-Purpose Three-Link Mechanisms (2660 through 2697) 373
2. General-Purpose Four-Link Mechanisms (2698 through 2709) 392
3. General-Purpose Multiple-Link Mechanisms (2710 through 2740) 398
4. Dwell Mechanisms (2741 through 2745) 423
5. Governor Mechanisms (2746 through 2752) 428
6. Mechanisms of Measuring and Testing Devices (2753) . . 433
7. Stop, Detent and Locking Mechanisms (2754 through 2763) 434
8. Brake Mechanisms (2764 and 2765) 439
9. Mechanisms of Materials Handling Equipment (2766 through 2775) 441
10. Sorting and Feeding Mechanisms (2776 through 2780) . . 447
11. Switching, Engaging and Disengaging Mechanisms (2781) 452
12. Mechanisms of Other Functional Devices (2782 through 2790) 453

SECTION SEVENTEEN. CAM-GEAR MECHANISMS . . . 463

1. General-Purpose Multiple-Link Mechanisms (2791 through 2794) 465
2. Dwell Mechanisms (2795 through 2798) 469
3. Sorting and Feeding Mechanisms (2799, 2800 and 2801) . 473
4. Mechanisms of Measuring and Testing Devices (2802 and 2803) 476
5. Mechanisms for Generating Curves (2804) 479
6. Mechanisms of Other Functional Devices (2805 and 2806) 480

SECTION EIGHTEEN. WORM-GEAR MECHANISMS . . 483

1. General-Purpose Three-Link Mechanisms (2807 through 2812) 485
2. General-Purpose Four-Link Mechanisms (2813, 2814 and 2815) 490
3. General-Purpose Multiple-Link Mechanisms (2816 through 2823) 493
4. Dwell Mechanisms (2824, 2825 and 2826) 499
5. Switching, Engaging and Disengaging Mechanisms (2827 and 2828) 502
6. Speed-Change and Reducing Gear Mechanisms (2829) . . 503
7. Mechanisms for Mathematical Operations (2830, 2831 and 2832) 504
8. Mechanisms of Measuring and Testing Devices (2833, 2834 and 2835) 506
9. Mechanisms of Other Functional Devices (2836 through 2842) 509

SECTION NINETEEN. COMPLEX GEAR MECHANISMS . . 515

1. Speed-Change and Reducing Gear Mechanisms (2843 through 2869) 517
2. Planetary Speed-Change and Reducing Gear Mechanisms (2870 through 2899) 546
3. Differential Speed-Change and Reducing Gear Mechanisms (2900 through 2925) 576
4. Strain Wave Gearing Mechanisms (2926 through 2932) . . 602
5. General-Purpose Multiple-Link Mechanisms (2933 through 2944) 609
6. Mechanisms for Mathematical Operations (2945 through 2950) 621
7. Mechanisms of Materials Handling Equipment (2951 through 2958) 627
8. Mechanisms of Vibrating Machines and Devices (2959, 2960 and 2961) 635
9. Clutch and Coupling Mechanisms (2962 and 2963) 637
10. Mechanisms of Measuring and Testing Devices (2964 through 2967) 639
11. Brake Mechanisms (2968) 643
12. Mechanisms of Other Functional Devices (2969 through 2977) 644

Index 653

PREFACE

This third volume of *Mechanisms in Modern Engineering Design* is devoted to gear mechanisms, i.e. mechanisms based on the application of toothed gears. More detailed descriptions are given of the structures of many of the most extensively used mechanisms, together with some data on the kinematic and length relations of their links, and other pertinent information. The schematic representations of the mechanisms and the descriptions are given in the same form as in the first two volumes. The mechanisms presented here have also been systemized on the basis of their structural features, with a second classification—according to their service function—given parallel to the basic classification.

Two tables, similar to those given in Volume I, should enable the reader to easily find the mechanism he requires, either by its structural features or its service function. Besides, the subject index at the back of the book lists the mechanisms in alphabetical order.

The indices of the subgroups are the same as in the first two volumes, but they have been supplemented by new subgroups given for the first time in this volume.

The reader can find all the information he requires on how this handbook is to be used most efficiently, on the conventions applied in the schematical representations and the descriptions, as well as other similar matters, in the preface and introduction published in the first volume.

Grateful acknowledgement is made of the assistance of the staff of the Department of the Theory of Mechanisms and Machines of the USSR Polytechnical Correspondence Institute and the head of this department, Prof. N. I. Levitsky, D.Sc.(Eng.), who carefully reviewed the manuscript and made many valuable suggestions. Especial thanks are due to the

Science Editor, Prof. V.A. Zinovyev, D.Sc.(Eng.), and to Editor N.I. Rozalskaya for their participation and assistance in preparing this volume for publication.

Please send all comments on the shortcomings of this handbook, reports on errors found by the readers and suggestions for future changes and supplementary data to Academician I.I. Artobolevsky, Institute of Mechanical Engineering, Ul. Griboyedova 4, Moscow 101830, U.S.S.R. They will be appreciated.

The English translation of the fourth volume is to be published in 1977.

I.I. Artobolevsky

Table 1

CLASSIFICATION OF MECHANISMS BASED ON STRUCTURAL FEATURES

Group No.	XIII		
Group name	Simple Gear Mechanisms		
Group index	SG		
No.	Name	Sub-group index	Mechanism No.
1	General-purpose three-link mechanisms	3L	2289 through 2344
2	General-purpose four-link mechanisms	4L	2345 through 2352
3	Dwell mechanisms	D	2353 through 2379
4	Mechanisms for generating curves	Ge	2380 through 2384
5	Sorting and feeding mechanisms	SF	2385 through 2391
6	Link-length adjustment mechanisms	LL	2392, 23.3 and 2394
7	Clutch and coupling mechanisms	C	2395 and 2396
8	Indexing mechanisms	I	2397
9	Gripping, clamping and expanding mechanisms	GC	2398
10	Mechanisms of materials handling equipment	MH	2399
11	Mechanisms of other functional devices	FD	2400, 2401 and 2402

Group No.	XIV		
Group name	Lever-Gear Mechanisms		
Group index	LrG		
No.	Name	Sub-group index	Mechanism No.
1	General-purpose four-link mechanisms	4L	2403 through 2411
2	General-purpose five-link mechanisms	5L	2412 through 2433

Table 1 (continued)

Group No.	XIV		
Group name	Lever-Gear Mechanisms		
Group index	LrG		
No.	**Name**	**Sub-group index**	**Mechanism No.**
3	General-purpose multiple-link mechanisms	ML	2434 through 2465
4	Mechanisms for generating curves	Ge	2466 through 2485
5	Mechanisms for mathematical operations	MO	2486 through 2506
6	Dwell mechanisms	D	2507 through 2518
7	Operating claw mechanisms of motion picture cameras	OC	2519 through 2522
8	Guiding mechanisms and inversors	GI	2523 through 2528
9	Mechanisms of measuring and testing devices	M	2529 through 2553
10	Piston machine mechanisms	PM	2533 and 2534
11	Mechanisms of vibrating machines and devices	VM	2535 and 2536
12	Gripping, clamping and expanding mechanisms	GC	2537 and 2538
13	Clutch and coupling mechanisms	C	2539 and 2540
14	Switching, engaging and disengaging mechanisms	SE	2541
15	Link-length adjustment mechanisms	LL	2542
16	Mechanisms of other functional devices	FD	2543 through 2576

Group No.	XV		
Group name	Pin-Gear Mechanisms		
Group index	PG		
No.	**Name**	**Sub-group index**	**Mechanism No.**
1	General-purpose three-link mechanisms	3L	2577 through 2591
2	General-purpose multiple-link mechanisms	ML	2592 through 2595
3	Dwell mechanisms	D	2596 through 2622
4	Geneva wheel mechanisms	GW	2623 through 2652
5	Sorting and feeding mechanisms	SF	2653 and 2654
6	Mechanisms of other functional devices	FD	2655 through 2659

Table 1 (continued)

Group No.	XVI		
Group name	Ratchet-Gear Mechanisms		
Group index	RG		
No.	Name	Sub-group index	Mechanism No.
1	General-purpose three-link mechanisms	3L	2660 through 2697
2	General-purpose four-link mechanisms	4L	2698 through 2709
3	General-purpose multiple-link mechanisms	ML	2710 through 2740
4	Dwell mechanisms	D	2741 through 2745
5	Governor mechanisms	G	2746 through 2752
6	Mechanisms of measuring and testing devices	M	2753
7	Stop, detent and locking mechanisms	SD	2754 through 2763
8	Brake mechanisms	Br	2764 and 2765
9	Mechanisms of materials handling equipment	MH	2766 through 2775
10	Sorting and feeding mechanisms	SF	2776 through 2780
11	Switching, engaging and disengaging mechanisms	SE	2781
12	Mechanisms of other functional devices	FD	2782 through 2790

Group No.	XVII		
Group name	Cam-Gear Mechanisms		
Group index	CmG		
No.	Name	Sub-group index	Mechanism No.
1	General-purpose multiple-link mechanisms	ML	2791 through 2794
2	Dwell mechanisms	D	2795 through 2798
3	Sorting and feeding mechanisms	SF	2799, 2800 and 2801
4	Mechanisms of measuring and testing devices	M	2802 and 2803
5	Mechanisms for generating curves	Ge	2804
6	Mechanisms of other functional devices	FD	2805 and 2806

Table 1 (continued)

Group No.	XVIII		
Group name	Worm-Gear Mechanisms		
Group index	WG		
No.	**Name**	**Sub-group index**	**Mechanism No.**
1	General-purpose three-link mechanisms	3L	2807 through 2812
2	General-purpose four-link mechanisms	4L	2813, 2814 and 2815
3	General-purpose multiple-link mechanisms	ML	2816 through 2823
4	Dwell mechanisms	D	2824, 2825 and 2826
5	Switching, engaging and disengaging mechanisms	SE	2827 and 2828
6	Speed-change and reducing gear mechanisms	SR	2829
7	Mechanisms for mathematical operations	MO	2830, 2831 and 2832
8	Mechanisms of measuring and testing devices	M	2833, 2834 and 2835
9	Mechanisms of other functional devices	FD	2836 through 2842

Group No.	XIX		
Group name	Complex Gear Mechanisms		
Group index	CxG		
No.	**Name**	**Sub-group index**	**Mechanism No.**
1	Speed-change and reducing gear mechanisms	SR	2843 through 2869
2	Planetary speed-change and reducing gear mechanisms	PR	2870 through 2899
3	Differential speed-change and reducing gear mechanisms	DR	2900 through 2925
4	Strain wave gearing mechanisms	SW	2926 through 2932
5	General-purpose multiple-link mechanisms	ML	2933 through 2944
6	Mechanisms for mathematical operations	MO	2945 through 2950
7	Mechanisms of materials handling equipment	MH	2951 through 2958
8	Mechanisms of vibrating machines and devices	VM	2959, 2960 and 2961
9	Clutch and coupling mechanisms	C	2962 and 2963
10	Mechanisms of measuring and testing devices	M	2964 through 2967
11	Brake mechanisms	Br	2968
12	Mechanisms of other functional devices	FD	2969 through 2977

Table 2

CLASSIFICATION OF MECHANISMS BASED ON FUNCTIONAL FEATURES

No.	Subgroup index	Subgroup name	Group index						
			SG	LrG	PG	RG	CmG	WG	CxG
1	Br	Brake mechanisms				2764 and 2765			2968
2	C	Clutch and coupling mechanisms	2395 and 2396	2539 and 2540					2962 and 2963
3	D	Dwell mechanisms	2353 through 2379	2507 through 2518	2596 through 2622	2741 through 2745	2795 through 2798	2824 through 2826	
4	DR	Differential speed-change and reducing gear mechanisms							2900 through 2925
5	FD	Mechanisms of other functional devices	2400 through 2402	2543 through 2576	2655 through 2659	2782 through 2790	2805 and 2806	2836 through 2842	2969 through 2977
6	G	Governor mechanisms				2746 through 2752			
7	GC	Gripping, clamping and expanding mechanisms	2398	2537 and 2538					

Table 2 (continued)

No.	Subgroup index	Subgroup name	Group index						
			SG	LrG	PG	RG	CmG	WG	CxG
8	Ge	Mechanisms for generating curves	2380 through 2384	2466 through 2485			2804		
9	GI	Guiding mechanisms and inversors		2523 through 2528					
10	GW	Geneva wheel mechanisms			2623 through 2652				
11	I	Indexing mechanisms	2397						
12	3L	General-purpose three-link mechanisms	2289 through 2344		2577 through 2591	2660 through 2697		2807 through 2812	
13	4L	General-purpose four-link mechanisms	2345 through 2352	2403 through 2411		2698 through 2709		2813 through 2815	
14	5L	General-purpose five-link mechanisms		2412 through 2433					

Table 2 (continued)

No.	Subgroup index	Subgroup name	Group index						
			SG	LrG	PG	RG	CmG	WG	CxG
15	LL	Link-length adjustment mechanisms	2392 through 2394	2542					
16	M	Mechanisms of measuring and testing devices		2529 through 2532		2752	2802 and 2803	2833 through 2835	2964 through 2967
17	MH	Mechanisms of materials handling equipment	2399			2766 through 2775			2951 through 2958
18	ML	General-purpose multiple-link mechanisms		2434 through 2465	2592 through 2595	2710 through 2740	2791 through 2794	2816 through 2823	2933 through 2944
19	MO	Mechanisms for mathematical operations		2486 through 2506				2830 through 2832	2945 through 2950
20	OC	Operating claw mechanisms of motion picture cameras		2519 through 2522					
21	PM	Piston machine mechanisms		2533 and 2534					

Table 2 (continued)

No.	Subgroup index	Subgroup name	Group Index						
			SG	LrG	PG	RG	CmG	WG	CxG
22	PR	Planetary speed-change and reducing gear mechanisms							2870 through 2899
23	SD	Stop, detent and locking mechanisms				2754 through 2763			
24	SE	Switching, engaging and disengaging mechanisms		2541		2781		2827 and 2828	
25	SF	Sorting and feeding mechanisms	2385 through 2391		2653 and 2654	2776 through 2780	2799 through 2801		
26	SR	Speed-change and reducing gear mechanisms						2829	2843 through 2869
27	SW	Strain wave gearing mechanisms							2926 through 2932
28	VM	Mechanisms of vibrating machines and devices		2535 and 2536					2959 through 2961

SECTION THIRTEEN

Simple Gear Mechanisms

SG

1. General-Purpose Three-Link Mechanisms 3L (2289 through 2344)
2. General-Purpose Four-Link Mechanisms 4L (2345 through 2352)
3. Dwell Mechanisms D (2353 through 2379)
4. Mechanisms for Generating Curves Ge (2380 through 2384)
5. Sorting and Feeding Mechanisms SF (2385 through 2391)
6. Link-Length Adjustment Mechanisms LL (2392, 2393, and 2394)
7. Clutch and Coupling Mechanisms C (2395 and 2396)
8. Indexing Mechanisms I (2397)
9. Gripping, Clamping and Spreading Mechanisms GC (2398)
10. Mechanisms of Materials Handling Equipment MH (2399)
11. Mechanisms of Other Functional Devices FD (2400, 2401 and 2402)

2289	THREE-LINK ELLIPTICAL CENTRODE GEARING	SG 3L

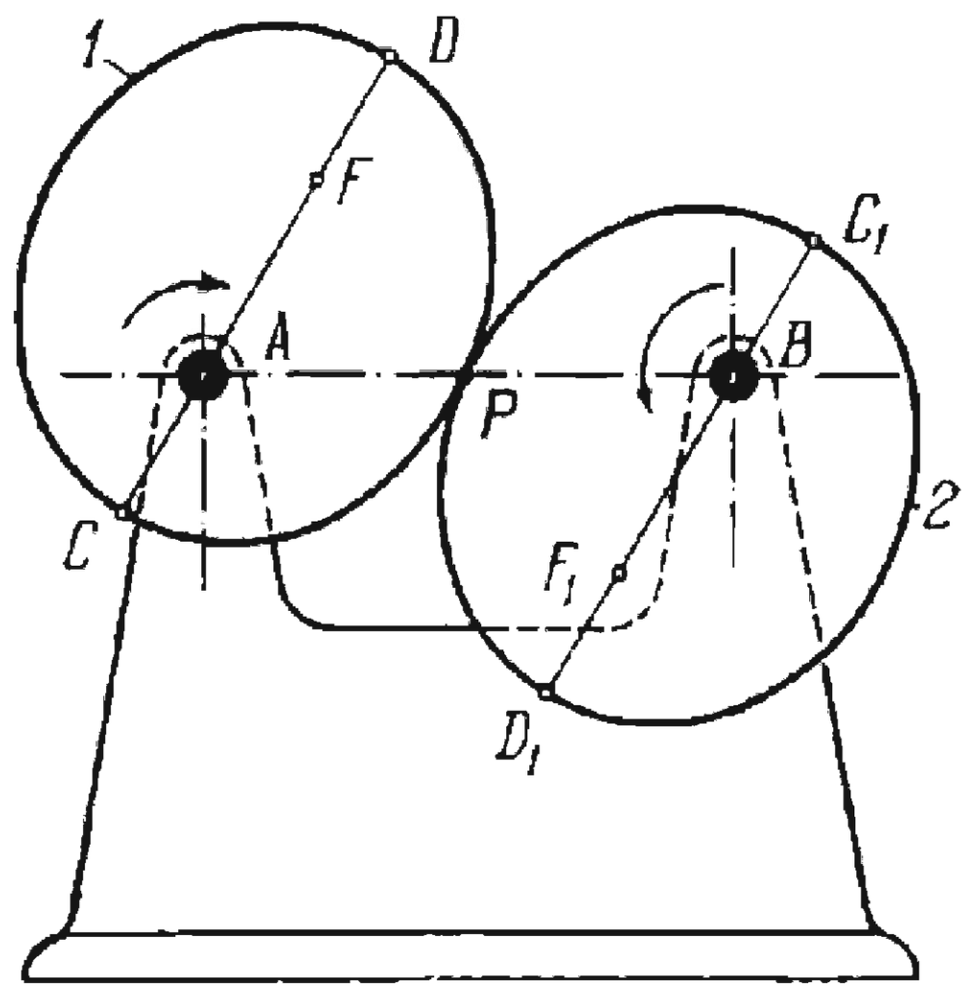

Wheels *1* and *2*, whose outlines are two identical ellipses, rotate about fixed axes *A* and *B* which coincide with foci of these ellipses. Their outlines are centrodes in the relative motion of the wheels. Without taking the sign into account, the transmission ratio in each position of the mechanism is

$$i_{12}=\frac{\omega_1}{\omega_2}=\frac{\overline{BP}}{\overline{AP}}$$

where ω_1 and ω_2 are the angular velocities of wheels *1* and *2*, and *P* is the point of contact of the outlines and always lies on line *AB*. The average transmission ratio in a full cycle of motion of the mechanism is $i_{12}=1$. If the distances from the centres of rotation of the ellipses to their other foci, $\overline{AF}=\overline{BF_1}$ are denoted by *c* and their major axes $\overline{C_1D_1}=\overline{AB}$ by *l*, then the transmission ratio varies once each cycle within the limits from

$$i_{min}=\frac{1-k}{1+k} \quad \text{to} \quad i_{max}=\frac{1+k}{1-k}$$

where $k=c/l$. Teeth are to be provided on the outlines of wheels *1* and *2* to obtain the full cycle of positive motion.

2290	THREE-LINK SINGLE-LOBE LOGARITHMIC-CURVE CENTRODE GEARING	SG 3L

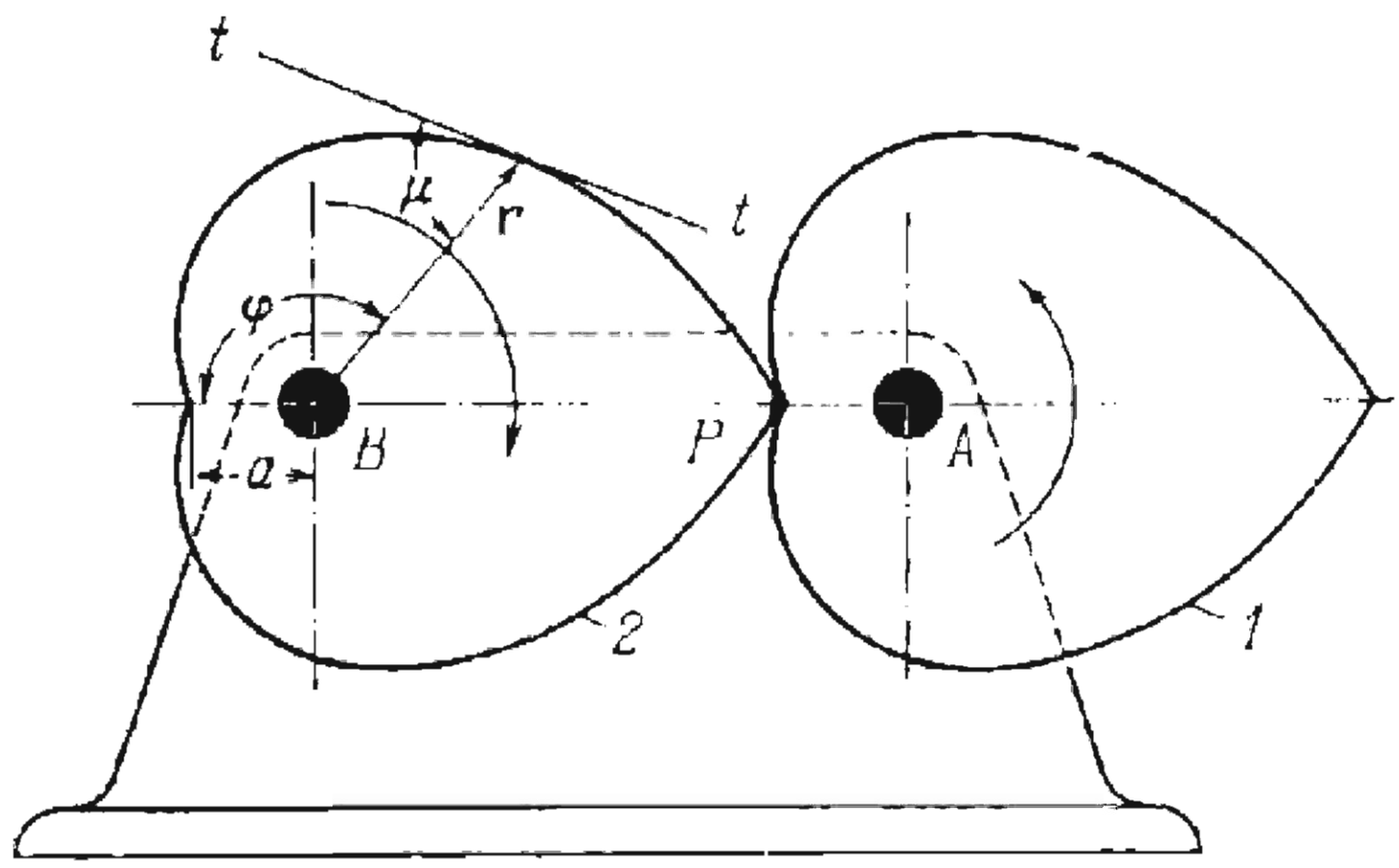

Wheels *1* and *2* rotate about fixed axes *A* and *B*. The outline of each wheel is composed of two identical and symmetric portions of a logarithmic spiral with the equation

$$\mathbf{r} = ae^{m\varphi}$$

where $\mathbf{r}$ = radius vector of the outline
a = minimum radius vector
m = cot μ
μ = constant angle between tangent *t-t* to the curve and radius vector $\mathbf{r}$.

The outlines of the wheels are centrodes in their relative motion. Without taking the sign into account, the transmission ratio in each position of the mechanism is

$$i_{12} = \frac{\omega_1}{\omega_2} = \frac{\overline{BP}}{\overline{AP}}$$

where ω_1 and ω_2 are the angular velocities of wheels *1* and *2*, and *P* is the point of contact of the outlines and always lies on line *AB*. The average transmission ratio in a full cycle of motion of the mechanism is $i_{12} = 1$. The transmission ratio varies once each cycle within the limits from

$$i_{\min} = \frac{1}{e^{m\pi}} \quad \text{to} \quad i_{\max} = e^{m\pi}.$$

Teeth are to be provided on the outlines of wheels *1* and *2* to obtain the full cycle of positive motion.

2291	THREE-LINK TWO-LOBE LOGARITHMIC-CURVE CENTRODE GEARING	SG 3L

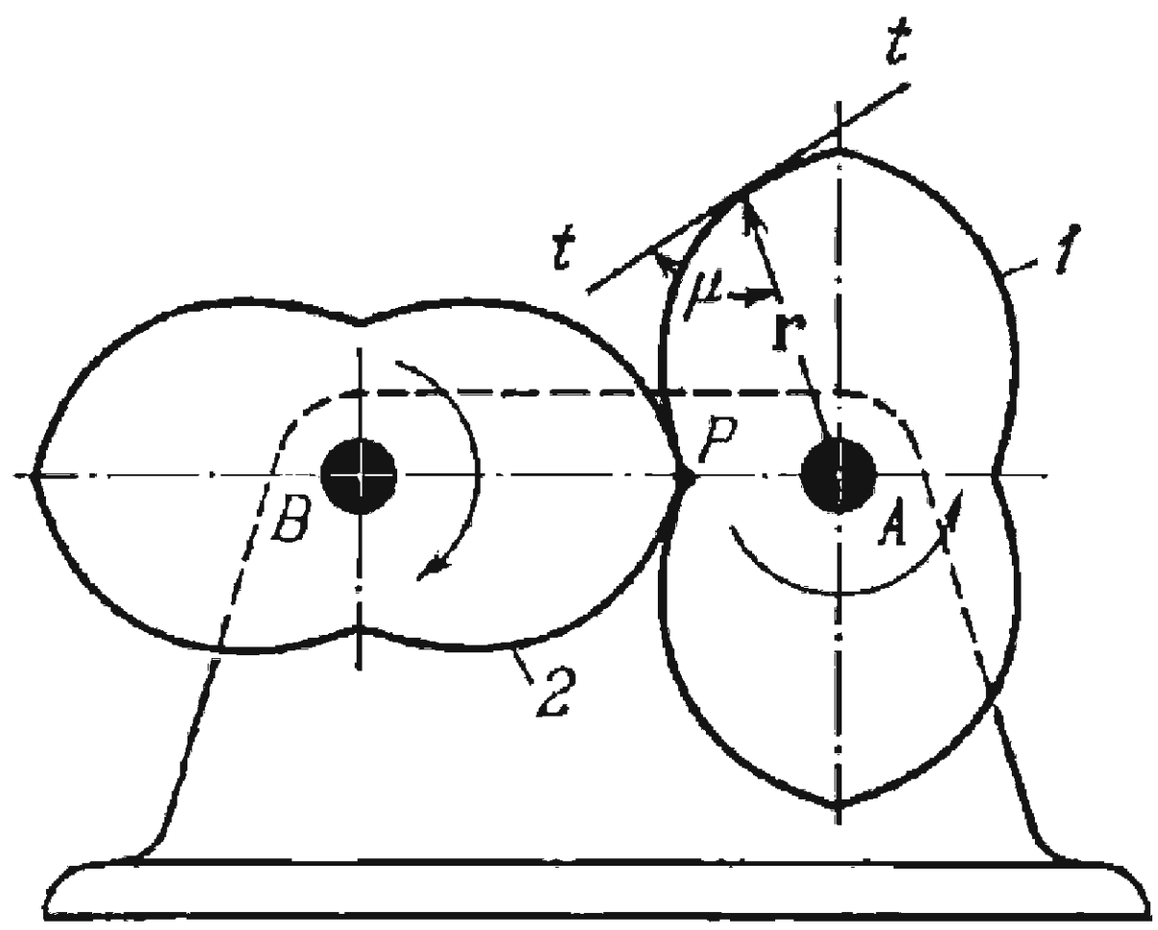

Wheels *1* and *2* rotate about fixed axes *A* and *B*. The outline of each wheel is composed of four identical portions of a logarithmic spiral, arranged symmetrically in pairs. The outlines of the wheels are centrodes in their relative motion. Without taking the sign into account, the transmission ratio in each position of the mechanism is

$$i_{12}=\frac{\omega_1}{\omega_2}=\frac{\overline{BP}}{\overline{AP}}$$

where ω_1 and ω_2 are the angular velocities of wheels *1* and *2*, and *P* is the point of contact of the outlines and always lies on line *AB*. The average transmission ratio in a full cycle of the mechanism is $i_{12}=1$. The transmission ratio varies twice each cycle within the limits from

$$i_{min}=\frac{1}{e^{\frac{m\pi}{2}}} \quad \text{to} \quad i_{max}=e^{\frac{m\pi}{2}}$$

where $m=\cot\mu$ and μ is the constant angle between tangent *t-t* to the curve and radius vector **r**. Teeth are to be provided on the outlines of wheels *1* and *2* to obtain the full cycle of positive motion.

2292	THREE-LINK THREE-LOBE LOGARITHMIC-CURVE CENTRODE GEARING	SG 3L

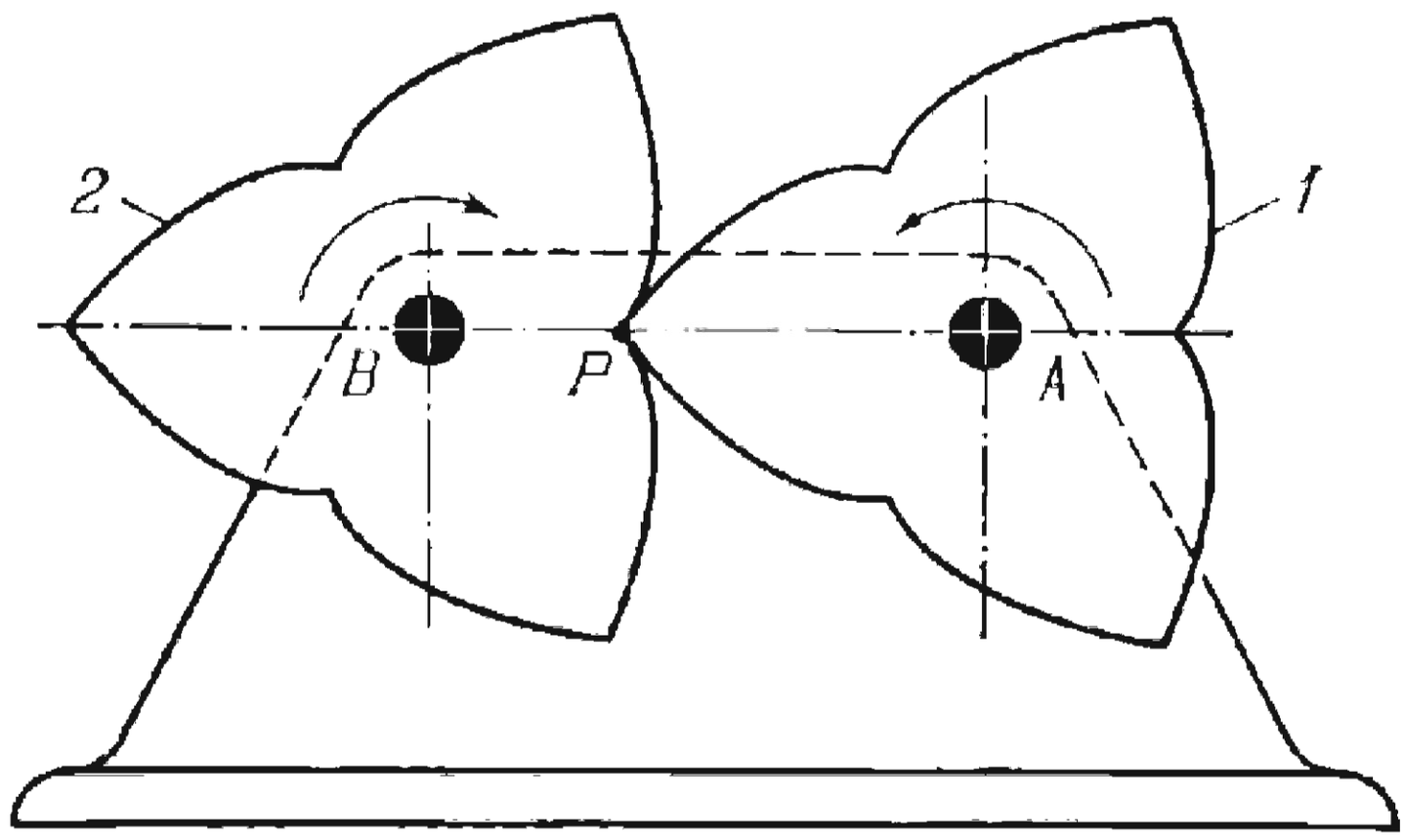

Wheels *1* and *2* rotate about fixed axes *A* and *B*. The outline of each wheel is composed of six identical portions of a logarithmic spiral, arranged symmetrically in pairs. The outlines of the wheels are centrodes in their relative motion. Without taking the sign into account, the transmission ratio in each position of the mechanism is

$$i_{12}=\frac{\omega_1}{\omega_2}=\frac{\overline{BP}}{\overline{AP}}$$

where ω_1 and ω_2 are the angular velocities of wheels *1* and *2*, and *P* is the point of contact of the outlines and always lies on line *AB*. The average transmission ratio in a full cycle of the mechanism is $i_{12}=1$. The transmission ratio varies three times each cycle within the limits from

$$i_{min}=\frac{1}{2} \quad \text{to} \quad i_{max}=2.$$

Teeth are to be provided on the outlines of wheels *1* and *2* to obtain the full cycle of positive motion.

2293	THREE-LINK FOUR-LOBE LOGARITHMIC-CURVE CENTRODE GEARING	SG 3L

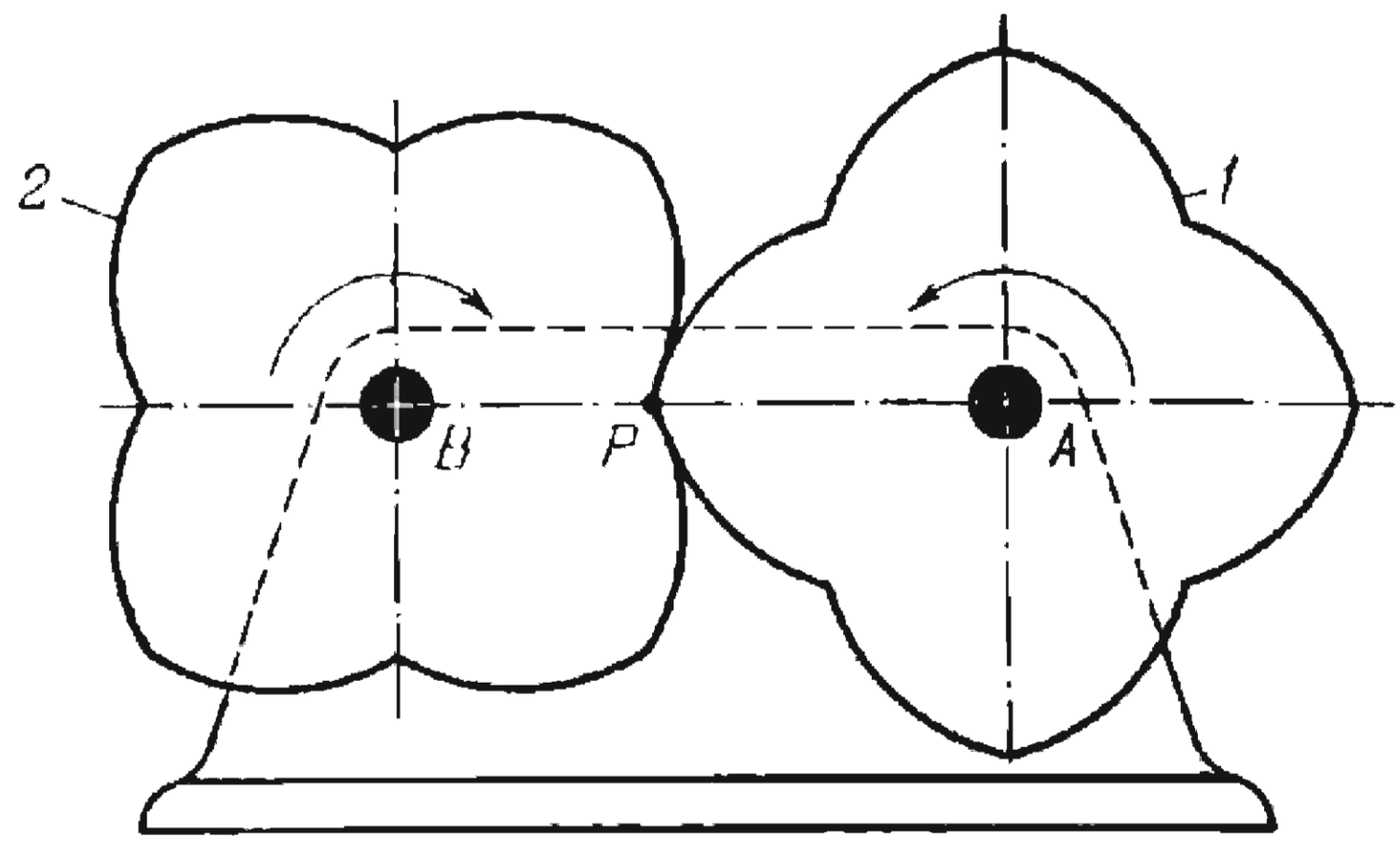

Wheels *1* and *2* rotate about fixed axes *A* and *B*. The outline of each wheel is composed of eight identical portions of a logarithmic spiral, arranged symmetrically in pairs. The outlines of the wheels are centrodes in their relative motion. Without taking the sign into account, the transmission ratio in each position of the mechanism is

$$i_{12}=\frac{\omega_1}{\omega_2}=\frac{\overline{BP}}{\overline{AP}}$$

where ω_1 and ω_2 are the angular velocities of wheels *1* and *2*, and *P* is the point of contact of the outlines and always lies on line *AB*. The average transmission ratio in a full cycle of the mechanism is $i_{12}=1$. The transmission ratio varies four times each cycle within the limits from

$$i_{\min}=\frac{1}{\sqrt{2}} \quad \text{to} \quad i_{\max}=\sqrt{2}.$$

Teeth are to be provided on the outlines of wheels *1* and *2* to obtain the full cycle of positive motion.

2294	THREE-LINK TWO-LOBE OVAL CENTRODE GEARING	SG 3L

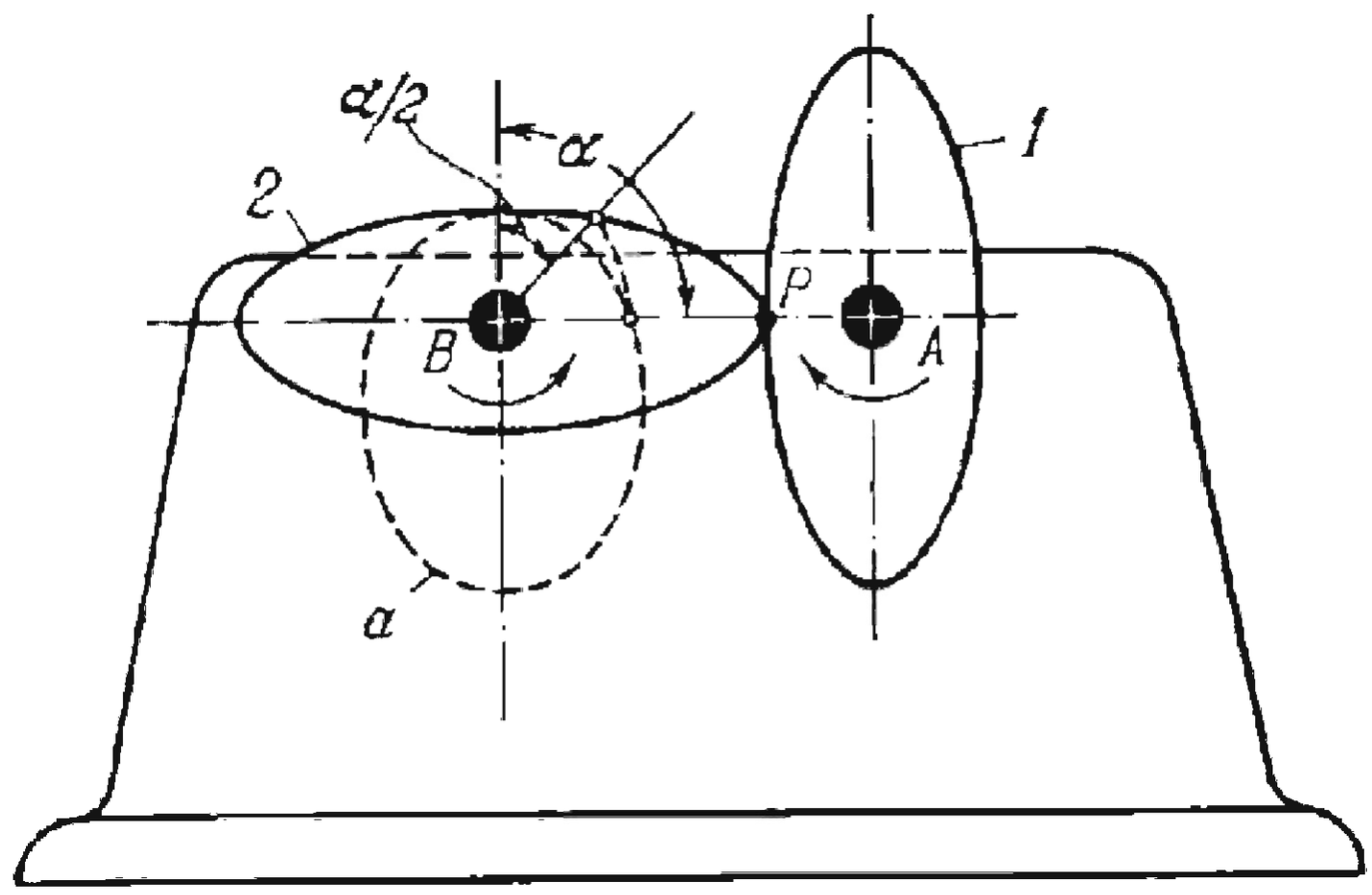

Wheels *1* and *2* rotate about fixed axes *A* and *B*. The outline of each wheel is composed of two identical and symmetric portions of an oval-type curve. These portions of the outline are constructed as follows: the radius vector of a point on ellipse *a* (measured from one of its foci at the angle α from the vertical axis) is equal to the radius vector of the corresponding point on the oval-type curve, measured likewise from the same focus, but at the angle $\alpha/2$. The outlines of the wheels are centrodes in their relative motion. Without taking the sign into account, the transmission ratio in each position of the mechanism is

$$i_{12}=\frac{\omega_1}{\omega_2}=\frac{\overline{BP}}{\overline{AP}}$$

where ω_1 and ω_2 are the angular velocities of wheels *1* and *2*, and *P* is the point of contact of the outlines and always lies on line *AB*. The average transmission ratio in a full cycle is $i_{12}=1$. The transmission ratio varies twice each cycle within the limits from

$$i_{\min}=\frac{1-k}{1+k} \quad \text{to} \quad i_{\max}=\frac{1+k}{1-k}$$

where $k=c/l$, *c* is the distance between the foci of ellipse *a* and *l* is the major axis of ellipse *a*. Teeth are to be provided on the outlines of wheels *1* and *2* to obtain the full cycle of positive motion.

2295	THREE-LINK THREE-LOBE OVAL CENTRODE GEARING	SG 3L]

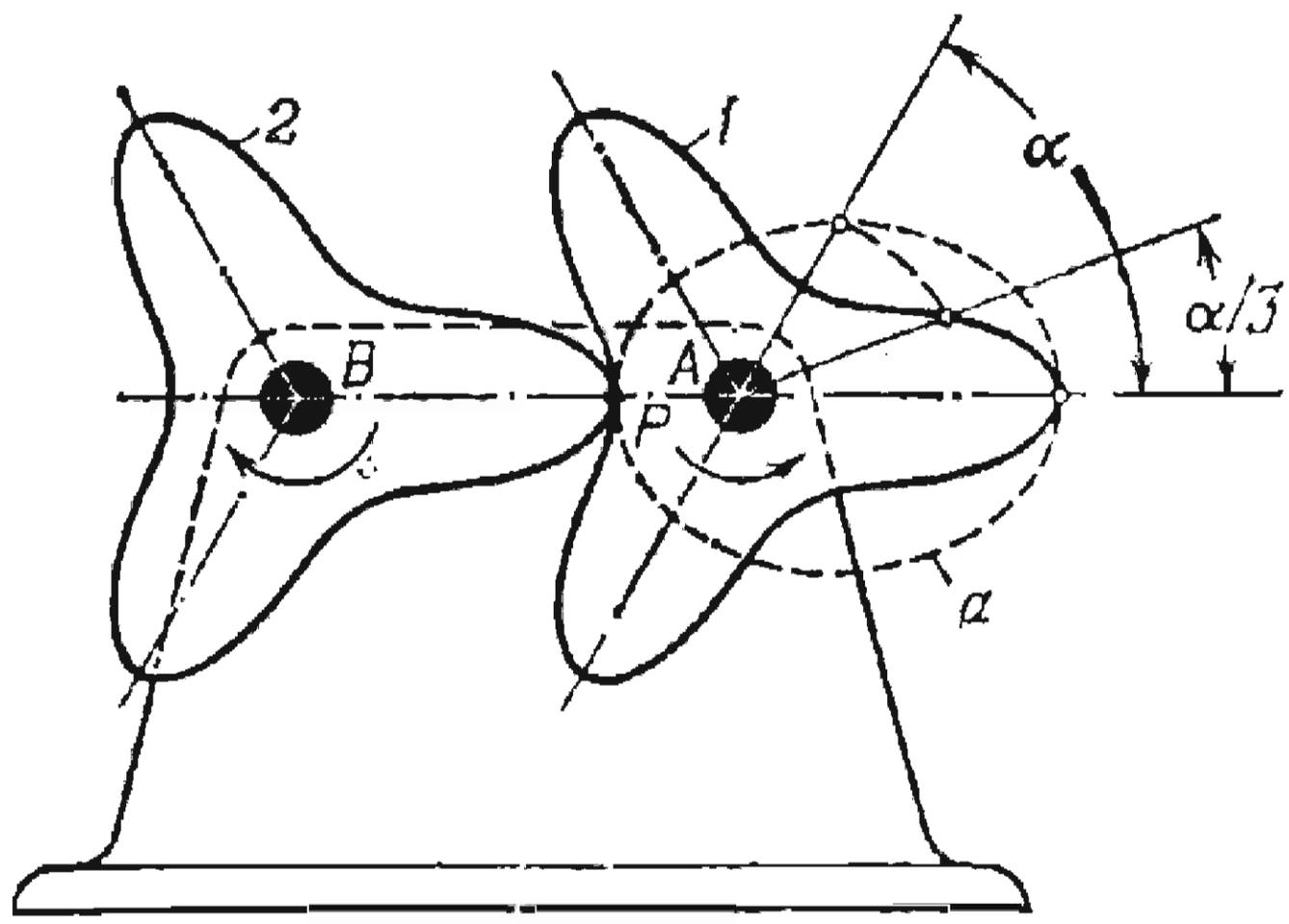

Wheels *1* and *2* rotate about fixed axes *A* and *B*. The outline of each wheel is composed of six identical portions of an oval-type curve, arranged symmetrically in pairs. These portions of the outline are constructed as follows: the radius vector of a point on ellipse *a* (measured from one of its foci at the angle α from the horizontal axis) is equal to the radius vector of the corresponding point on the oval-type curve, measured likewise from the same focus, but at the angle α/3. The outlines of the wheels are centrodes in their relative motion. Without taking the sign into account, the transmission ratio in each position of the mechanism is

$$i_{12}=\frac{\omega_1}{\omega_2}=\frac{\overline{BP}}{\overline{AP}}$$

where ω_1 and ω_2 are the angular velocities of wheels *1* and *2*, and *P* is the point of contact of the outlines and always lies on line *AB*. The average transmission ratio in a full cycle is $i_{12}=1$. The transmission ratio varies three times each cycle within the limits from

$$i_{min}=\frac{1-k}{1+k} \quad \text{to} \quad i_{max}=\frac{1+k}{1-k}$$

where $k=c/l$, *c* is the distance between the foci of ellipse *a* and *l* is the major axis of ellipse *a*. Teeth are to be provided on the outlines of wheels *1* and *2* to obtain the full cycle of positive motion.

2296	THREE-LINK FOUR-LOBE OVAL CENTRODE GEARING	SG 3L

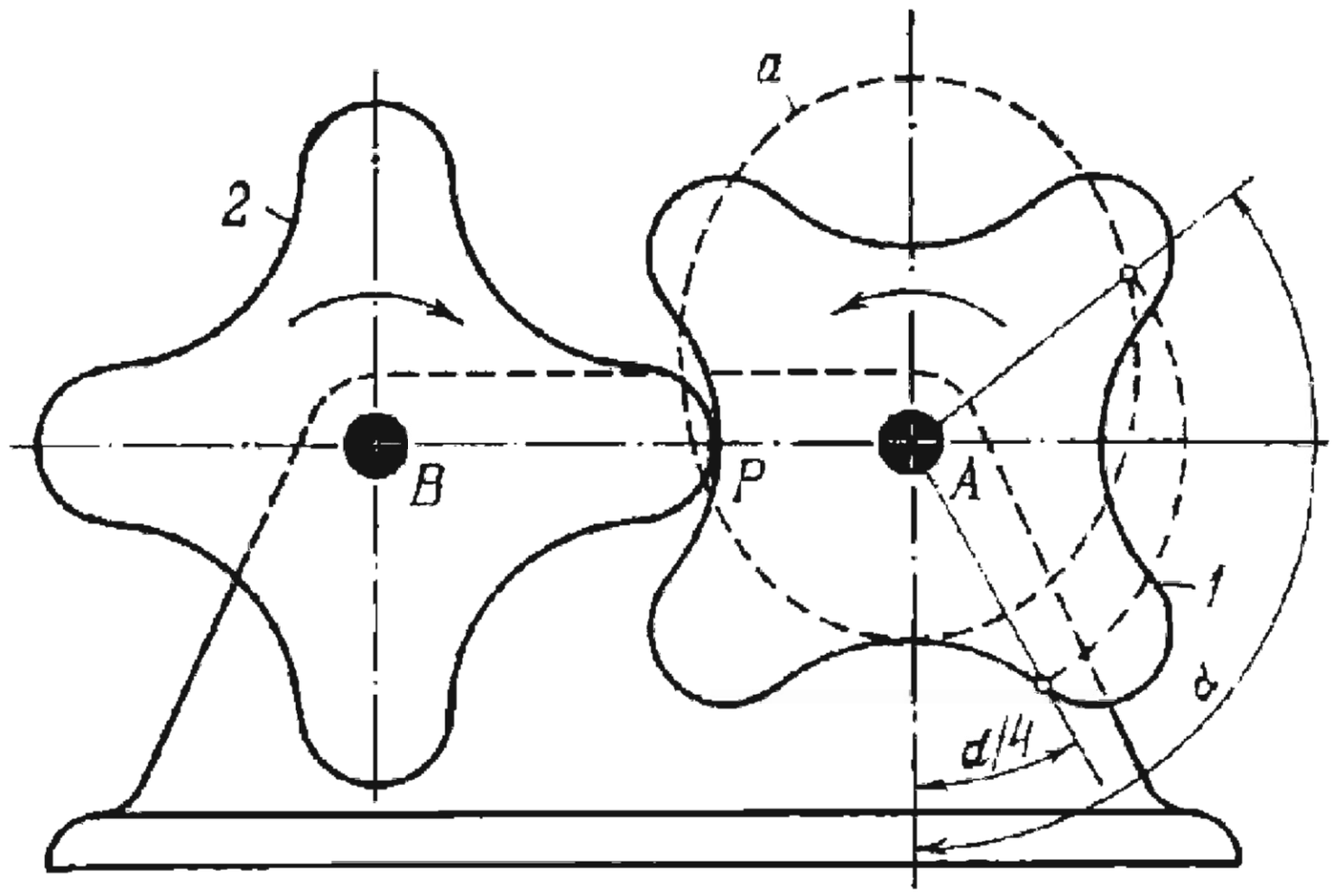

Wheels *1* and *2* rotate about fixed axes *A* and *B*. The outline of each wheel is composed of eight identical portions of an oval-type curve, arranged symmetrically in pairs. These portions of the outline are constructed as follows: the radius vector of a point on ellipse *a* (measured from one of its foci at the angle α from the vertical axis) is equal to the radius vector of the corresponding point on the oval-type curve, measured likewise from the same focus, but at the angle $\alpha/4$. The outlines of the wheels are centrodes in their relative motion. Without taking the sign into account, the transmission ratio in each position of the mechanism is

$$i_{12}=\frac{\omega_1}{\omega_2}=\frac{\overline{BP}}{\overline{AP}}$$

where ω_1 and ω_2 are the angular velocities of wheels *1* and *2*, and *P* is the point of contact of the outlines and always lies on line *AB*. The average transmission ratio in a full cycle is $i_{12}=1$. The transmission ratio varies four times each cycle within the limits from

$$i_{\min}=\frac{1-k}{1+k} \quad \text{to} \quad i_{\max}=\frac{1+k}{1-k}$$

where $k=c/l$, *c* is the distance between the foci of ellipse *a* and *l* is the major axis of ellipse *a*. Teeth are to be provided on the outlines of wheels *1* and *2* to obtain the full cycle of positive motion.

2297	THREE-LINK OVAL CENTRODE GEARING WITH TWO- AND THREE-LOBE WHEELS	SG 3L

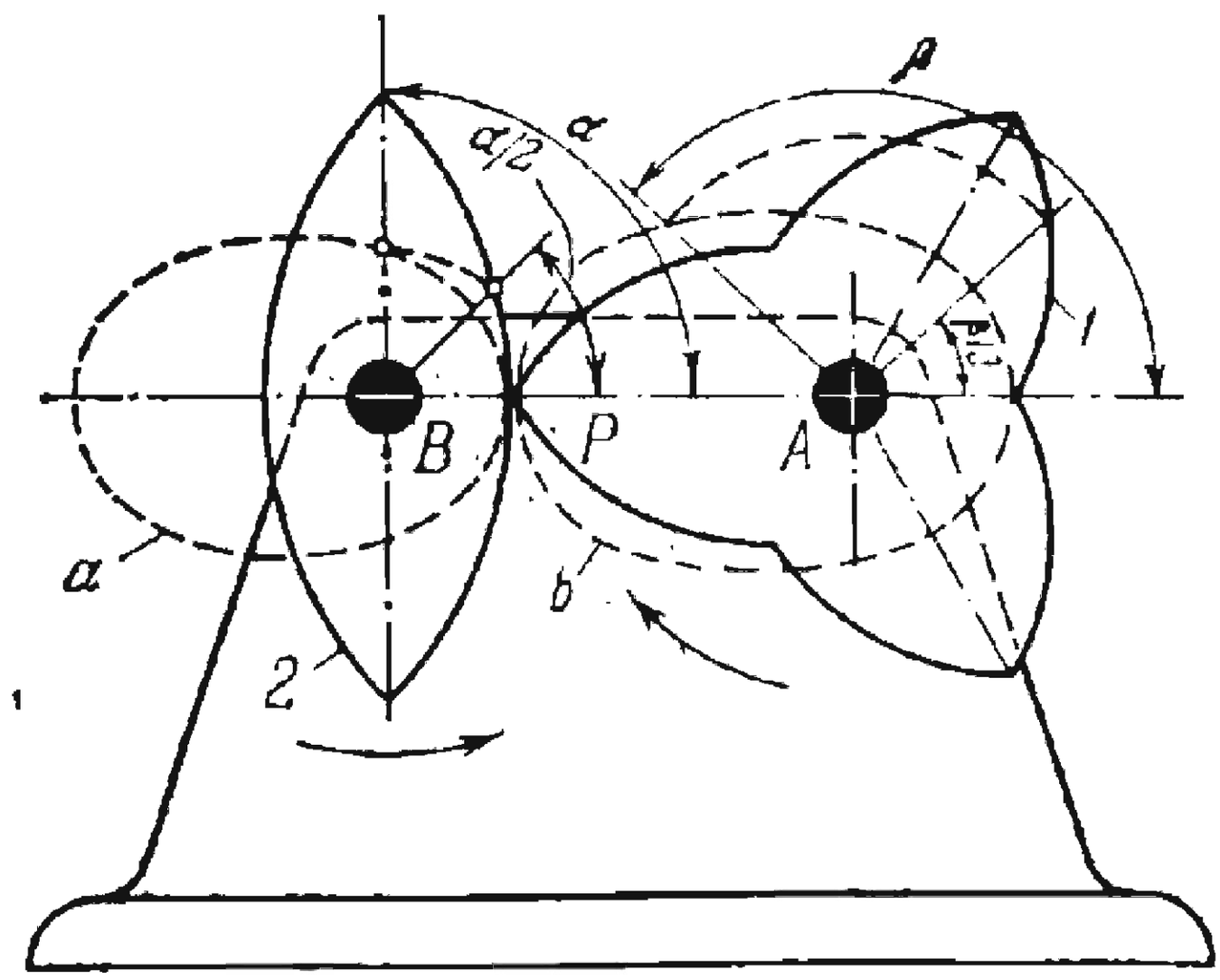

Wheels *1* and *2* rotate about fixed axes *A* and *B*. The outline of wheel *2* is composed of four identical portions of an oval-type curve, arranged symmetrically in pairs. These portions of the outline are constructed as follows: the radius vector of a point on ellipse *a* (measured from one of its foci at the angle α from the horizontal axis) is equal to the radius vector of the corresponding point on the oval-type curve, measured likewise from the same focus, but at the angle $\alpha/2$. The outline of wheel *1* is composed of six identical portions of an oval-type curve, arranged symmetrically in pairs. These portions of the outline are constructed as follows: the radius vector of a point on ellipse *b* (measured from one of its foci at the angle of β from the horizontal axis) is equal to the radius vector of the corresponding point on the oval-type curve, measured likewise from the same focus, but at the angle $\beta/3$. The outlines of wheels *1* and *2* are centrodes in their relative motion. Without taking the sign into account, the transmission ratio in each position of the mechanism is

$$i_{12}=\frac{\omega_1}{\omega_2}=\frac{\overline{BP}}{\overline{AP}}$$

where ω_1 and ω_2 are the angular velocities of wheels *1* and *2*, and *P* is the point of contact of the outlines and always lies on line *AB*. The average transmission ratio in a full cycle is $i_{21}=\frac{3}{2}=1.5$. The transmission ratio varies within the limits from

$$i_{\min}=\frac{1-k}{1+k} \quad \text{to} \quad i_{\max}=\frac{1+k}{1-k}$$

where $k=c/l$, *c* is the distance between the foci of ellipse *a* and *l* is the major axis of ellipse *a*. Teeth are to be provided on the outlines of wheels *1* and *2* to obtain the full cycle of positive motion.

2298	THREE-LINK ELLIPTICAL AND OVAL CENTRODE GEARING	SG 3L

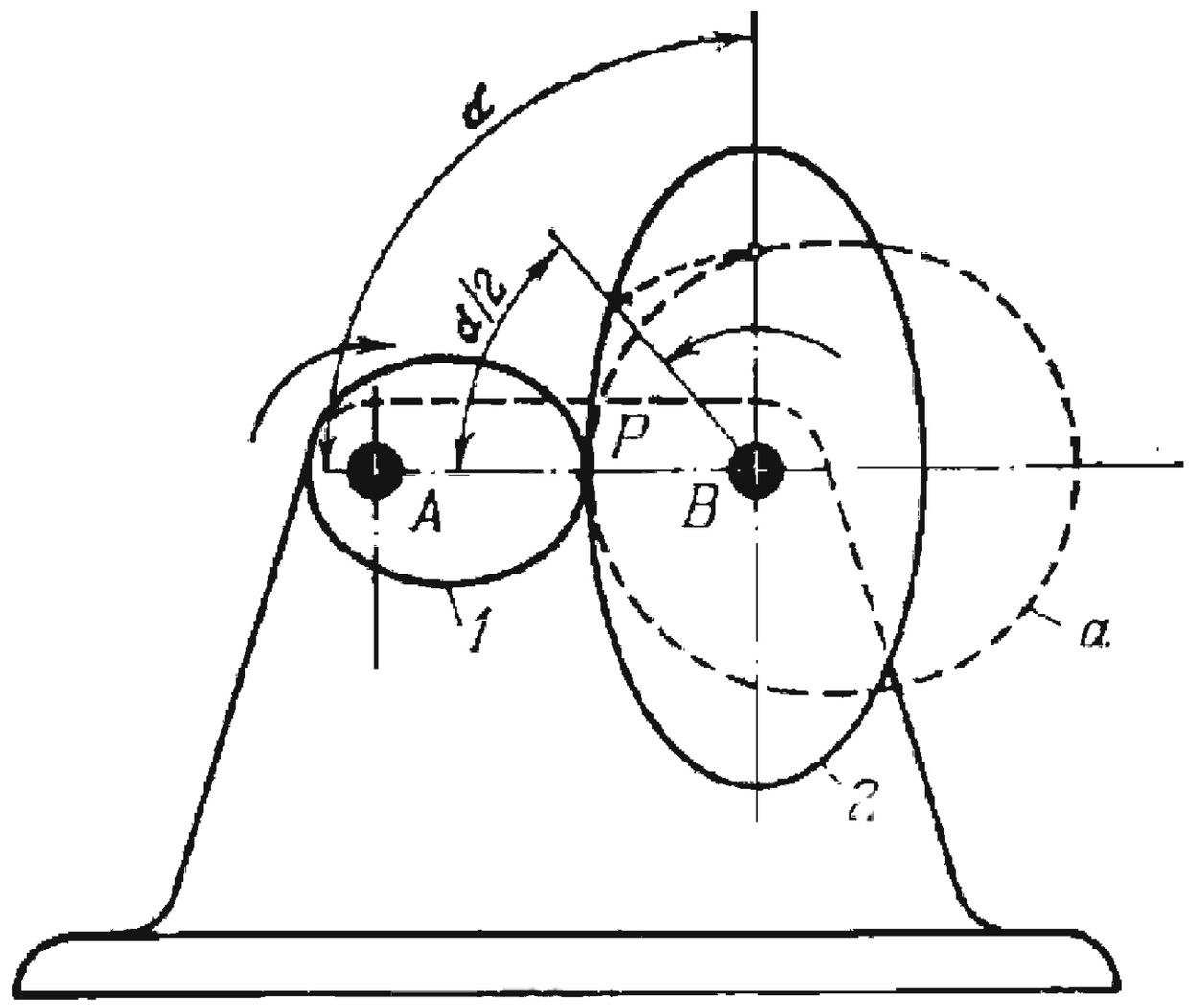

Wheels *1* and *2* rotate about fixed axes *A* and *B*. The outline of wheel *1* is an ellipse with a focus at point *A*. The outline of wheel *2* is composed of two identical portions of an oval-type curve, arranged symmetrically. These portions of the outline are constructed as follows: the radius vector of a point on ellipse *a* (measured from one of its foci at the angle α from the horizontal axis) is equal to the radius vector of the corresponding point on the oval-type curve, measured likewise from the same focus, but at the angle $\alpha/2$. The ratio of the lengths of the outlines of wheels *2* and *1* is $n = 2$. The outlines of wheels *1* and *2* are centrodes in their relative motion. Without taking the sign into account, the transmission ratio in each position of the mechanism is

$$i_{12}=\frac{\omega_1}{\omega_2}=\frac{\overline{BP}}{\overline{AP}}$$

where ω_1 and ω_2 are the angular velocities of wheels *1* and *2*, and *P* is the point of contact of the outlines and always lies on line *AB*. The average transmission ratio in a full cycle is $i_{12} = 2$. The transmission ratio varies within the limits from

$$i_{\min}=\frac{l_1}{l_2}\,\frac{1-k_1}{1+k_2} \quad \text{to} \quad i_{\max}=\frac{l_1}{l_2}\,\frac{1+k_1}{1-k_2}$$

where $k_1 = c_1/l_1$, $k_2 = c_2/l_2$, c_1 and c_2 are the distances between the foci of ellipse *a* and between those of elliptic wheel *1*, and l_1 and l_2 are the major axes of these ellipses. Teeth are to be provided on the outlines of wheels *1* and *2* to obtain the full cycle of positive motion.

2299	THREE-LINK ELLIPTICAL AND OVAL CENTRODE GEARING	SG 3L

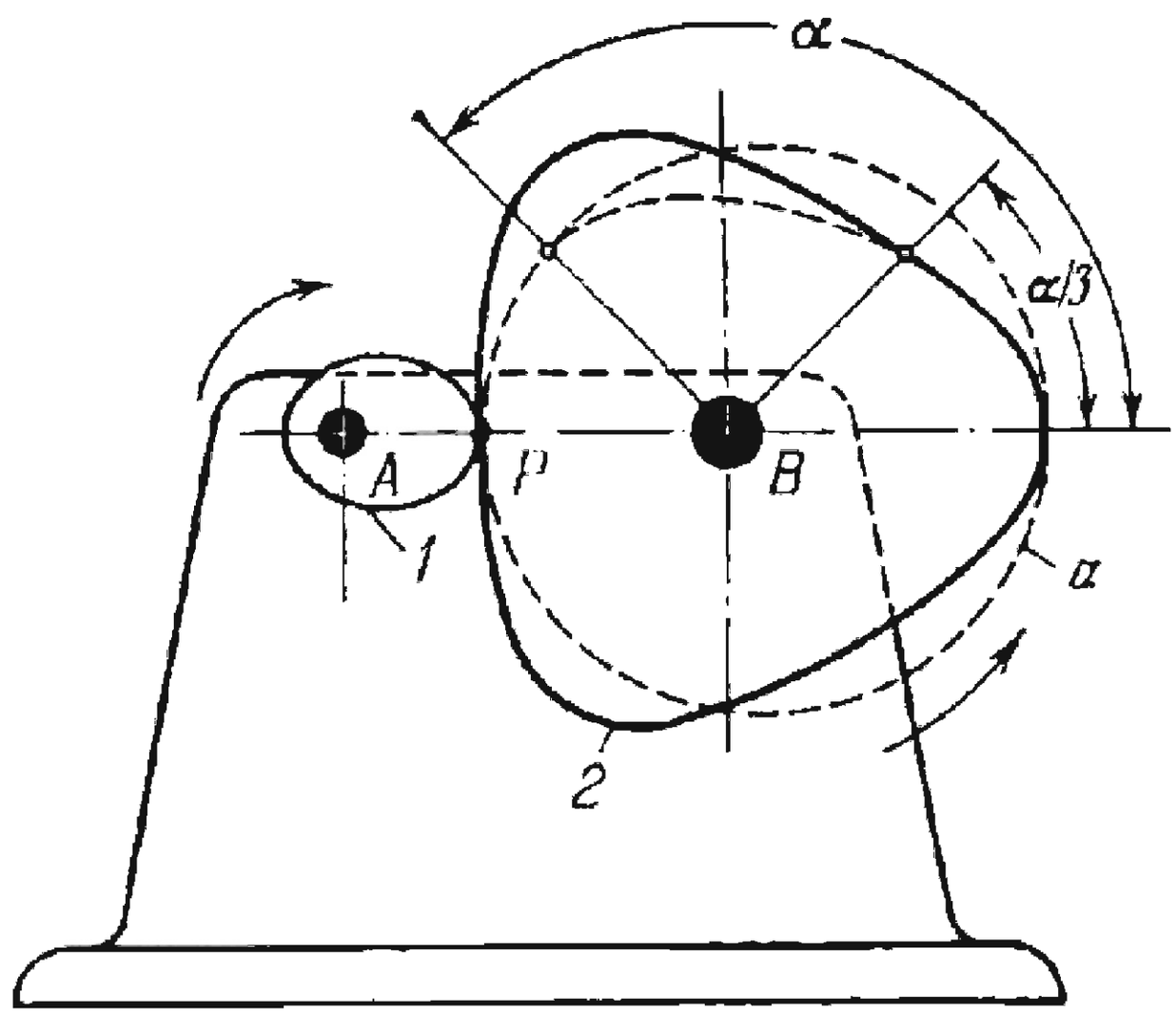

Wheels *1* and *2* rotate about fixed axes *A* and *B*. The outline of wheel *1* is an ellipse with a focus at point *A*. The outline of wheel *2* is composed of three identical portions of an oval-type curve, arranged symmetrically. These portions of the outline are constructed as follows: the radius vector of a point on ellipse *a* (measured from one of its foci at the angle α from the horizontal axis) is equal to the radius vector of the corresponding point on the oval-type curve, measured likewise from the same focus, but at the angle $\alpha/3$. The ratio of the lengths of the outlines of wheels *2* and *1* is $n = 3$. The outlines of wheels *1* and *2* are centrodes in their relative motion. Without taking the sign into account, the transmission ratio in each position of the mechanism is

$$i_{12} = \frac{\omega_1}{\omega_2} = \frac{\overline{BP}}{\overline{AP}}$$

where ω_1 and ω_2 are the angular velocities of wheels *1* and *2*, and *P* is the point of contact of the outlines and always lies on line *AB*. The average transmission ratio in a full cycle is $i_{12} = 3$. The transmission ratio varies within the limits from

$$i_{min} = \frac{l_1}{l_2}\,\frac{1-k_1}{1+k_2} \quad \text{to} \quad i_{max} = \frac{l_1}{l_2}\,\frac{1+k_1}{1-k_2}$$

where $k_1 = c_1/l_1$, $k_2 = c_2/l_2$, c_1 and c_2 are the distances between the foci of ellipse *a* and between those of elliptic wheel *1*, and l_1 and l_2 are the major axes of these ellipses. Teeth are to be provided on the outlines of wheels *1* and *2* to obtain the full cycle of positive motion.

2300	THREE-LINK CENTRODE GEARING WITH CIRCULAR AND NONCIRCULAR WHEELS	SG 3L

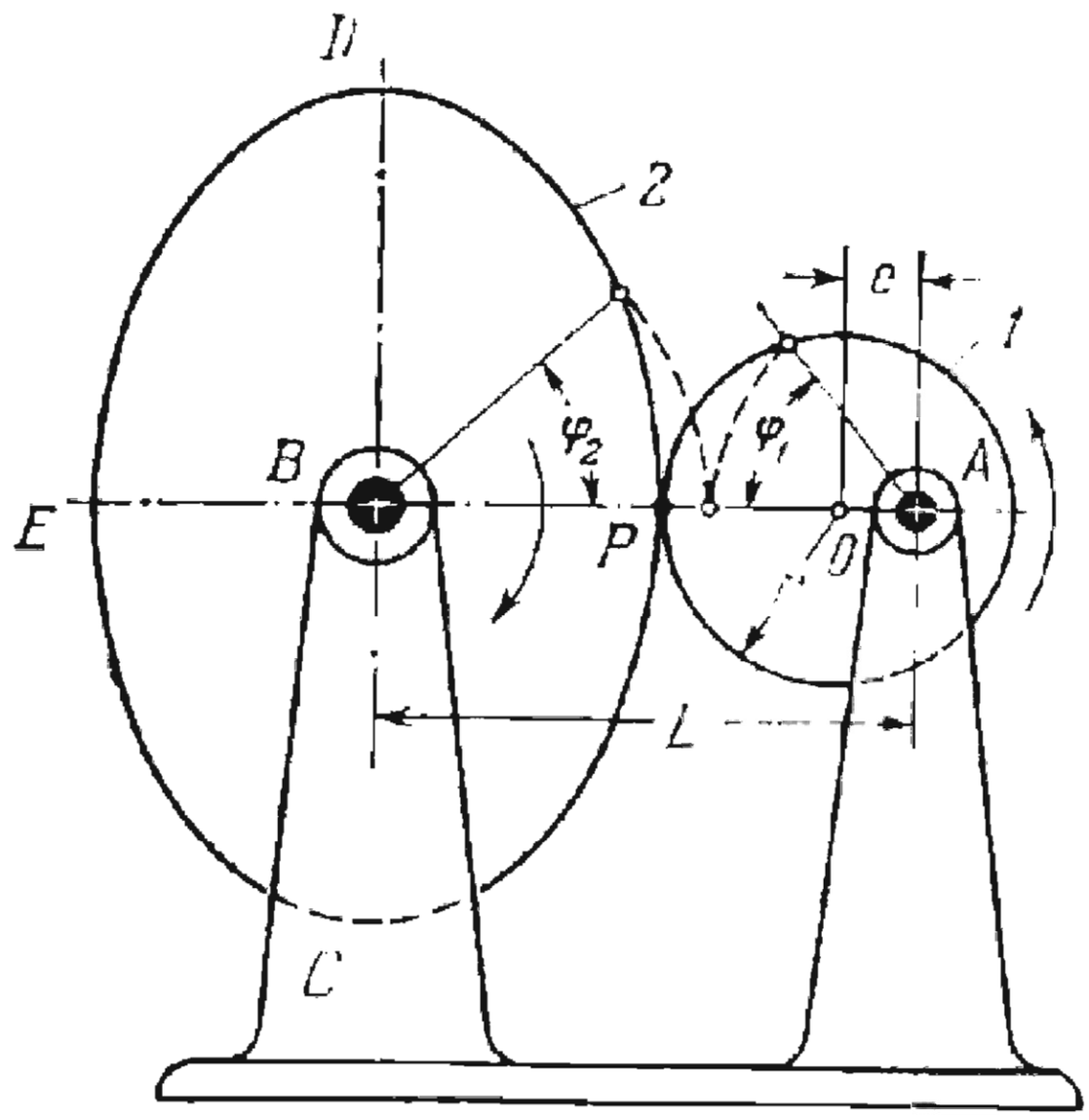

Wheels *1* and *2* rotate about fixed axes *A* and *B*. The outline of wheel *1* is a circle with its centre at point *O*. The outline of wheel *2* is composed of two identical curves, *DPC* and *DEC*, arranged symmetrically. The centre-to-centre distance *L* complies with the condition

$$L \cong r(1+i)\left[1-\frac{(i-2)\,\varepsilon^2}{4i}+\frac{(-3i^3+2i^2+12i+24)\,\varepsilon^4}{64i^3}\right]$$

where r is the radius of circular wheel *1*, $\varepsilon = e/r$ is the ratio of the eccentricity e to the radius r and i is the average transmission ratio $i = i_{12} = 1, 2, 3, 4, \ldots$. Angles φ_1 and φ_2 of rotation of centrodes *1* and *2* are related as follows:

$$\varphi_2 = \int_{\varphi_2}^{\varphi_1} \frac{\sqrt{r^2-e^2\sin^2\varphi_1}-e\cos\varphi_1}{L-\sqrt{r^2-e^2\sin^2\varphi_1}+e\cos\varphi_1}\,d\varphi_1.$$

The outlines of wheels *1* and *2* are centrodes in their relative motion. Without taking the sign into account, the transmission ratio in each position of the mechanism is

$$i_{12} = \frac{\omega_1}{\omega_2} = \frac{\overline{BP}}{\overline{AP}}$$

where ω_1 and ω_2 are the angular velocities of wheels *1* and *2*, and *P* is the point of contact of the outlines and always lies on line *AB*. Expressed in terms of the parameters of the wheels, the transmission ratio is

$$i_{12} = \frac{L}{\sqrt{r^2-e^2\sin^2\varphi_1}-e\cos\varphi_1}-1.$$

The transmission ratio varies within the limits from

$$i_{\min} = \frac{1-\varepsilon}{m-(1-\varepsilon)} \quad \text{to} \quad i_{\max} = \frac{1+\varepsilon}{m-(1+\varepsilon)}$$

where $m = L/r$. The average transmission ratio of the given version is $i_{12} = 2$. The length of each arc, *DPC* or *DEC*, equals $2\pi r$. Teeth are to be provided on the outlines of wheels *1* and *2* to obtain the full cycle of positive motion.

2301 THREE-LINK EXTERNAL CIRCULAR TOOTHED GEARING

SG 3L

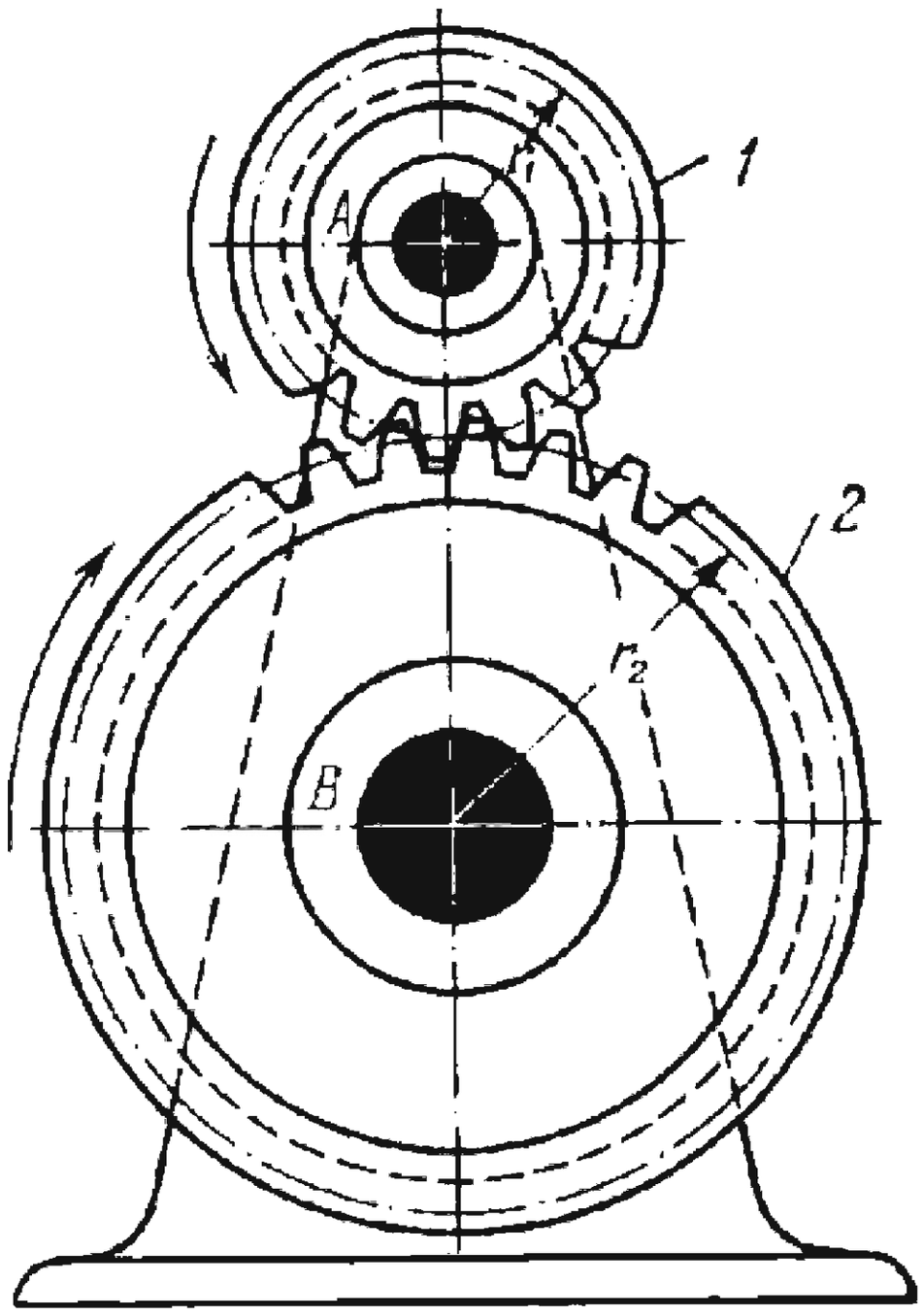

Toothed gears *1* and *2* rotate in opposite directions about fixed axes *A* and *B*. Taking the sign of the angular velocities ω_1 and ω_2 of gears *1* and *2* into account, the transmission ratio of the mechanism is

$$i_{12}=\frac{\omega_1}{\omega_2}=-\frac{r_2}{r_1}=-\frac{z_2}{z_1}$$

where r_1 and r_2 are the pitch radii, and z_1 and z_2 are the numbers of teeth of gears *1* and *2*.

2302 THREE-LINK INTERNAL CIRCULAR TOOTHED GEARING

SG 3L

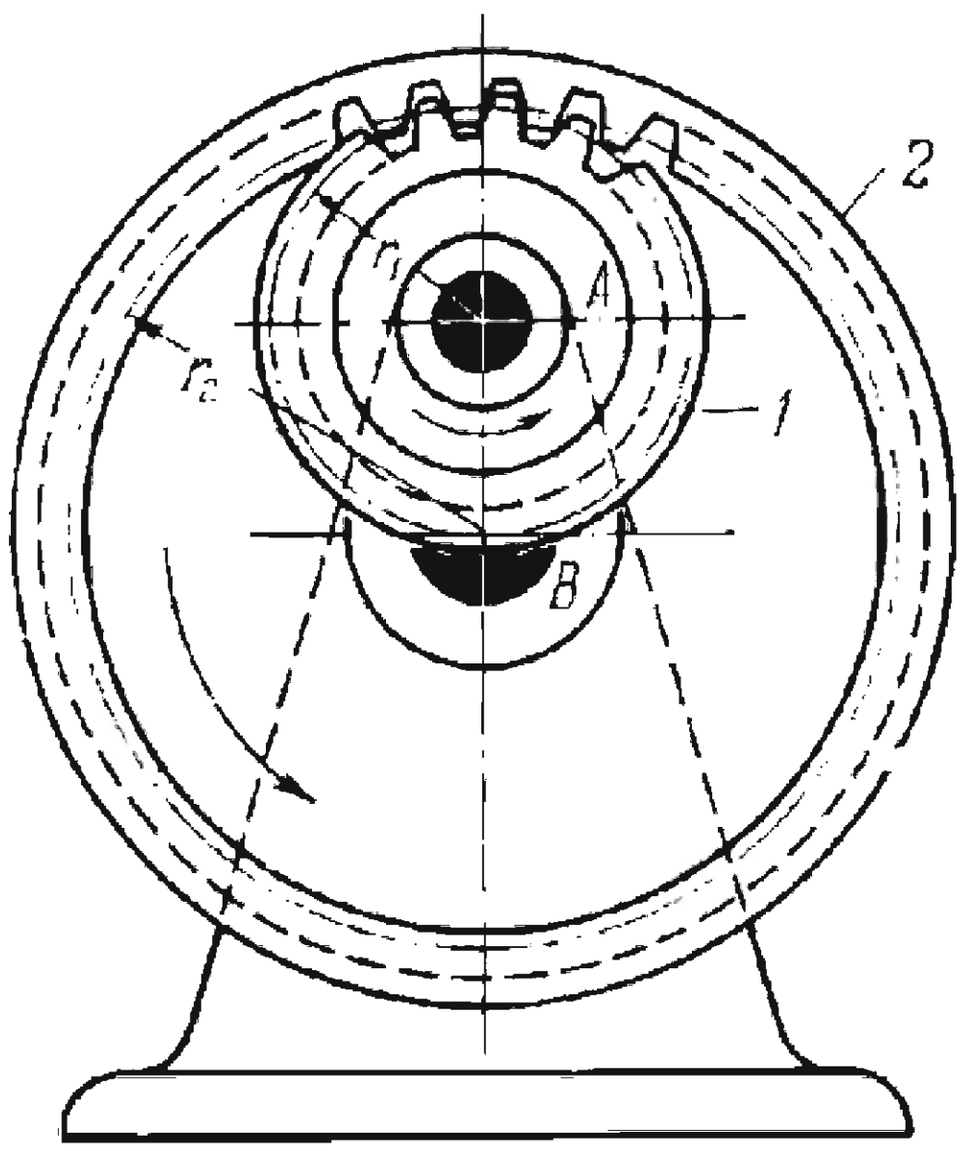

Toothed pinion *1* and internal gear *2* rotate in the same direction about fixed axes *A* and *B*. Taking the sign of the angular velocities ω_1 and ω_2 of pinion *1* and gear *2* into account, the transmission ratio of the mechanism is

$$i_{12}=\frac{\omega_1}{\omega_2}=\frac{r_2}{r_1}=\frac{z_2}{z_1}$$

where r_1 and r_2 are the pitch radii and z_1 and z_2 are the numbers of teeth of pinion *1* and gear *2*.

2303 THREE-LINK TOOTHED RACK-AND-PINION GEARING

SG 3L

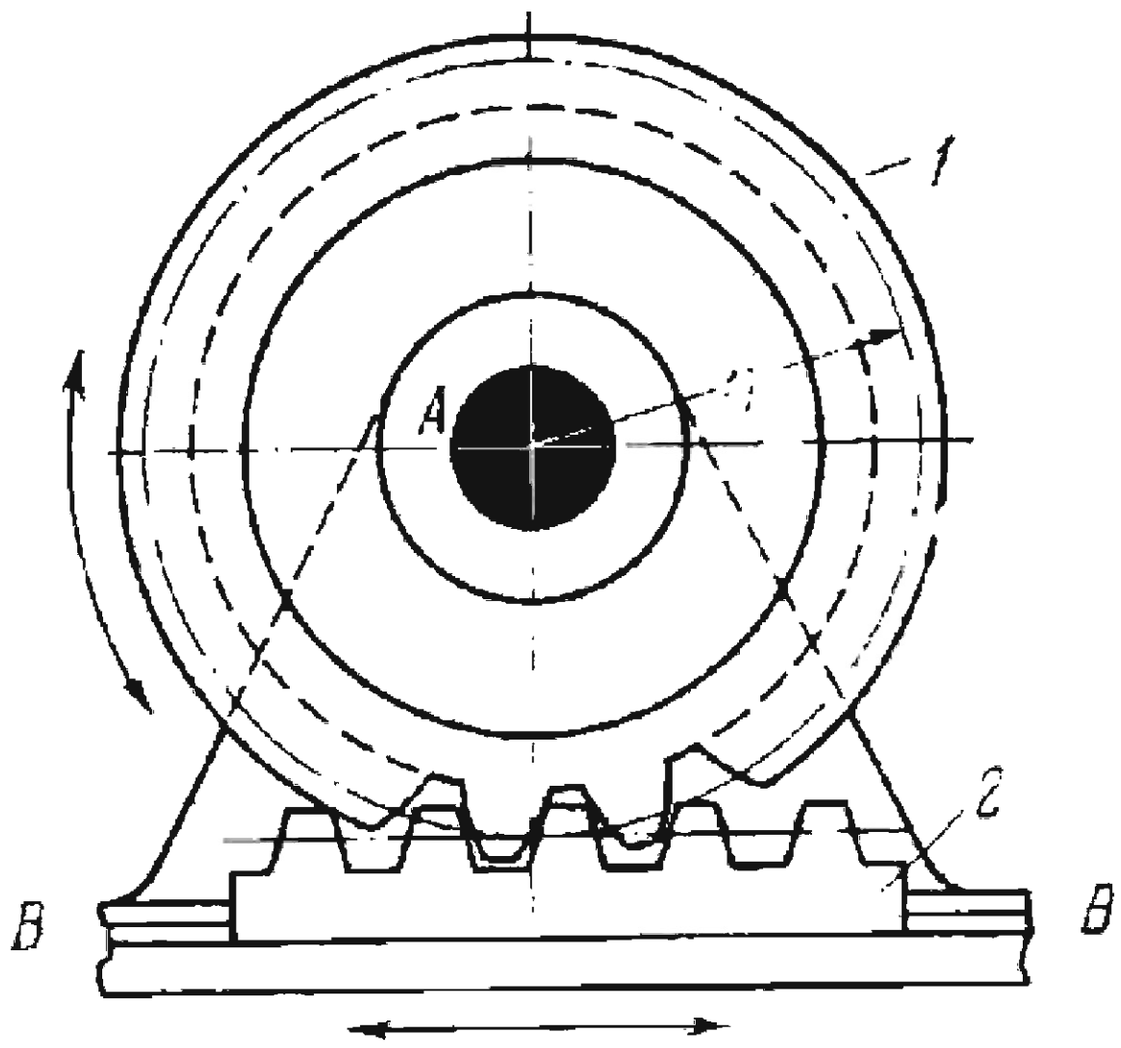

Toothed pinion *1* rotates about fixed axis *A*. Toothed rack *2* slides along fixed guides *B-B*. The velocity of rack *2* is

$$v_2 = \omega_1 r_1$$

where ω_1 is the angular velocity and r_1 is the pitch radius of pinion *1*.

2304 THREE-LINK INTERNAL TOOTHED GEARING WITH STRAIGHT-PROFILE GEARS

SG 3L

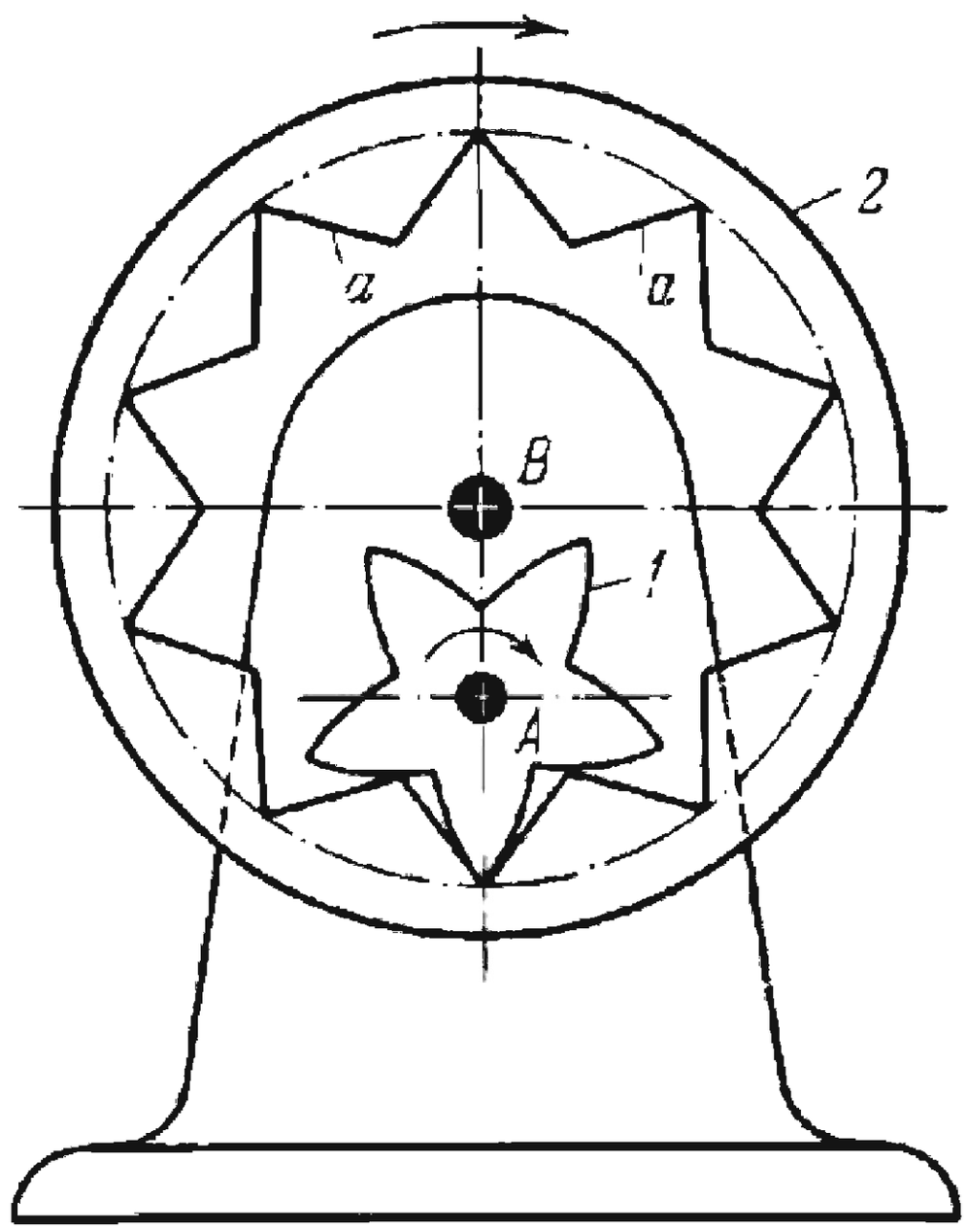

Pinion *1* rotates about fixed axis *A* and meshes with internal gear *2* which rotates about fixed axis *B*. The tooth profiles *a* of gear *2* are straight lines. The transmission ratio is

$$i_{12} = \frac{\omega_1}{\omega_2} = \frac{n_1}{n_2} = \frac{z_2}{z_1} = 2$$

where ω_1 and ω_2 are the angular velocities, n_1 and n_2 are the rpm and z_1 and z_2 are the numbers of teeth of pinion *1* and gear *2*.

2305	THREE-LINK EXTERNAL CIRCULAR PLANETARY TOOTHED GEARING	SG 3L

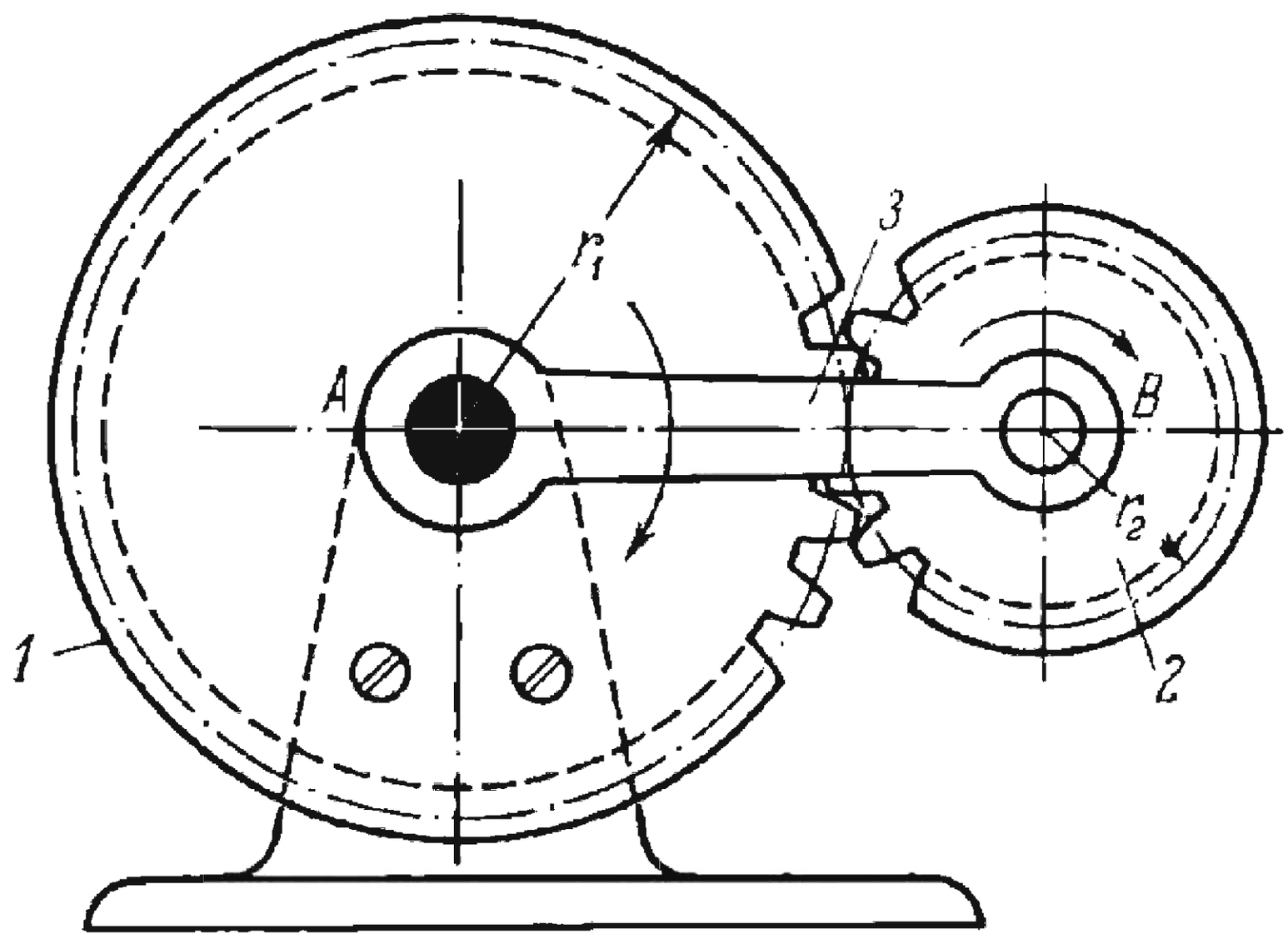

Sun gear *1* is rigidly attached to the base. Planet gear *2* rotates about axis *B* of carrier *3* which, in turn, rotates about fixed axis *A*. Taking the sign of the angular velocities ω_2 and ω_3 of gear *2* and carrier *3* into account, the transmission ratio of the mechanism is

$$i_{23}=\frac{\omega_2}{\omega_3}=1+\frac{r_1}{r_2}=1+\frac{z_1}{z_2}$$

where r_1 and r_2 are the pitch radii, and z_1 and z_2 are the numbers of teeth of gears *1* and *2*. The paths of points of gear *2* are epicycloids.

2306	THREE-LINK INTERNAL CIRCULAR PLANETARY TOOTHED GEARING	SG 3L

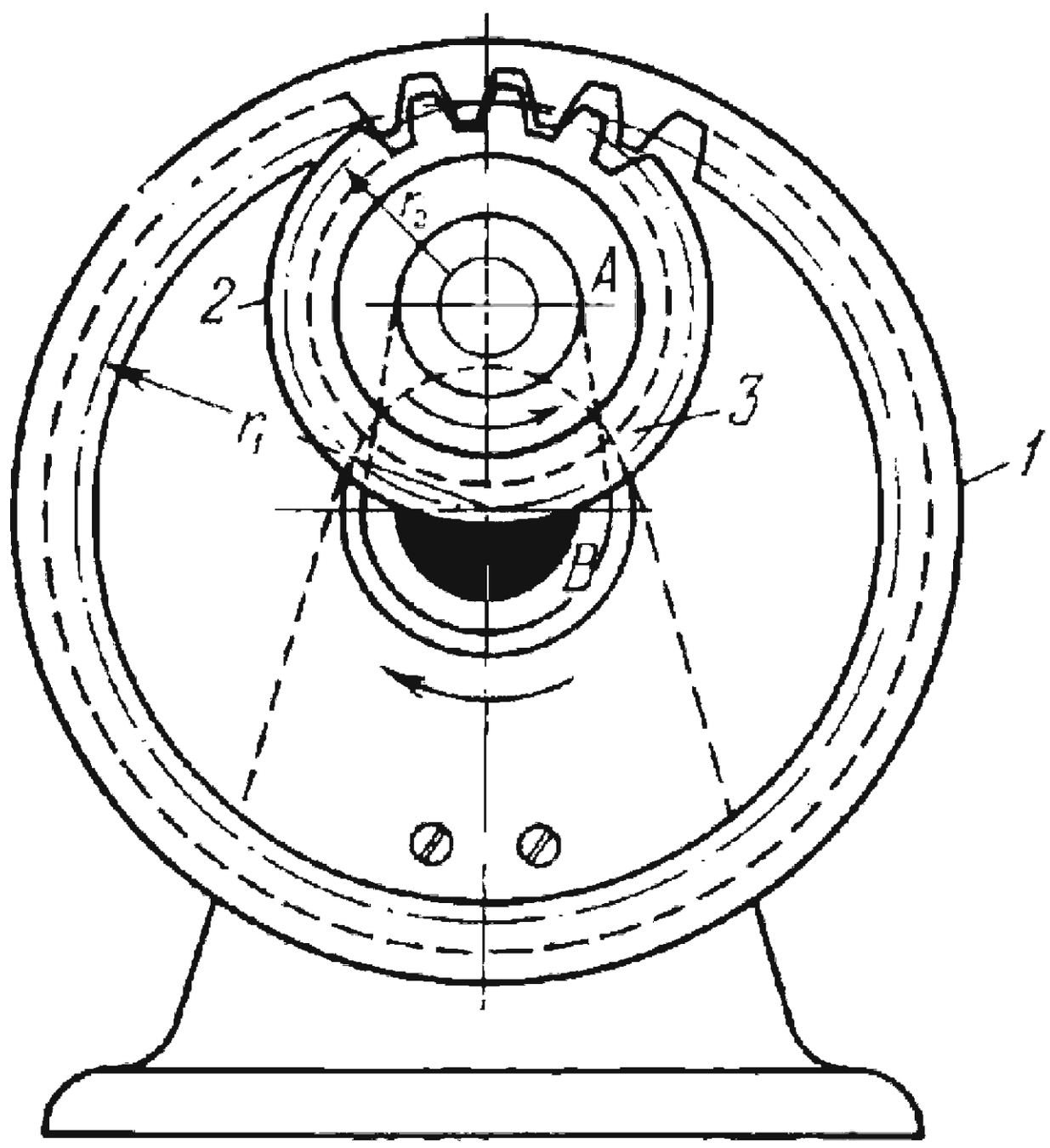

Internal sun gear *1* is rigidly attached to the base. Planet gear *2* rotates about axis *A* of carrier *3* which, in turn, rotates about fixed axis *B*. Taking the sign of the angular velocities ω_2 and ω_3 of gear *2* and carrier *3* into account, the transmission ratio of the mechanism is

$$i_{23} = \frac{\omega_2}{\omega_3} = 1 - \frac{r_1}{r_2} = 1 - \frac{z_1}{z_2}$$

where r_1 and r_2 are the pitch radii, and z_1 and z_2 are the numbers of teeth of gears *1* and *2*. The paths of points of gear *2* are hypocycloids.

2307 THREE-LINK RACK-AND-PINION PLANETARY TOOTHED GEARING

SG 3L

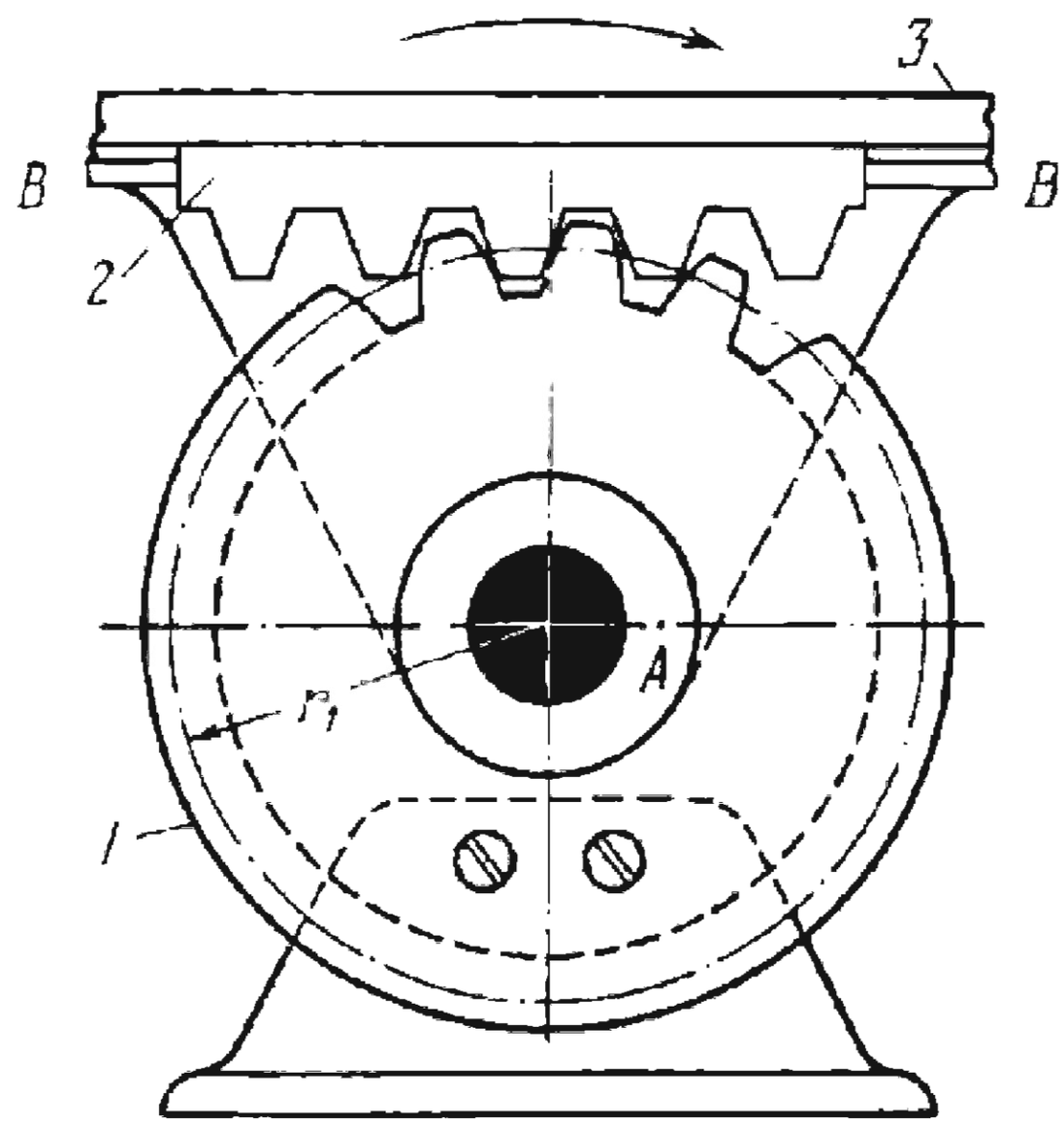

Toothed pinion *1* is rigidly attached to the base. Rack *2* slides along guides *B-B* of carrier *3* which, in turn, rotates about fixed axis *A*. Angular velocity ω_2 of the rack equals angular velocity ω_3 of the carrier. The velocity of sliding motion of rack *2* in guides *B-B* is

$$v = \omega_2 r_1$$

where r_1 is the pitch radius of pinion *1*. The paths of the points of rack *2* are involutes of a circle of radius r_1.

2308 THREE-LINK NONCIRCULAR SPIRAL TOOTHED GEARING

SG 3L

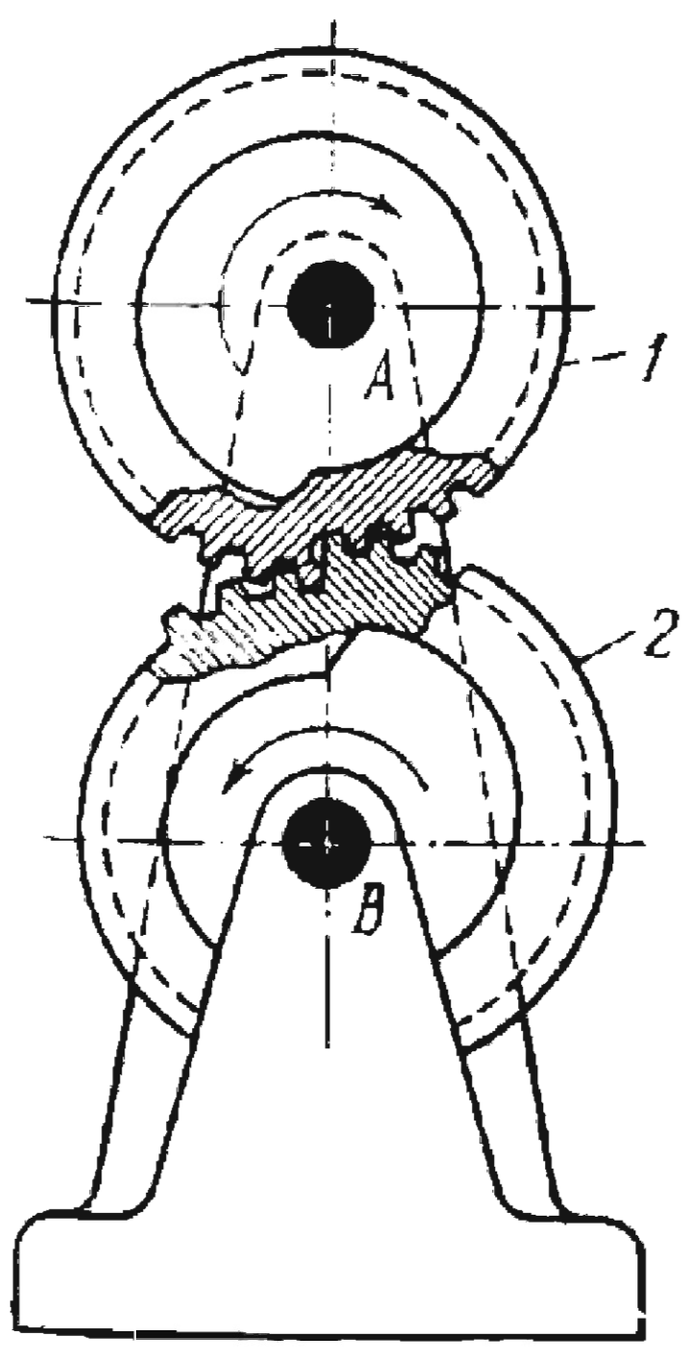

Noncircular toothed gears *1* and *2* rotate about fixed axes *A* and *B*. The centrodes of the gears are identical spirals. If driving gear *1* rotates at uniform velocity, driven gear *2* rotates with nonuniform velocity. An impact occurs between meshing gears *1* and *2* at the instant of transition from the ends of the spirals to their beginnings.

2309	THREE-LINK TOOTHED GEARING WITH CIRCULAR-ECCENTRIC AND NONCIRCULAR GEARS	SG 3L

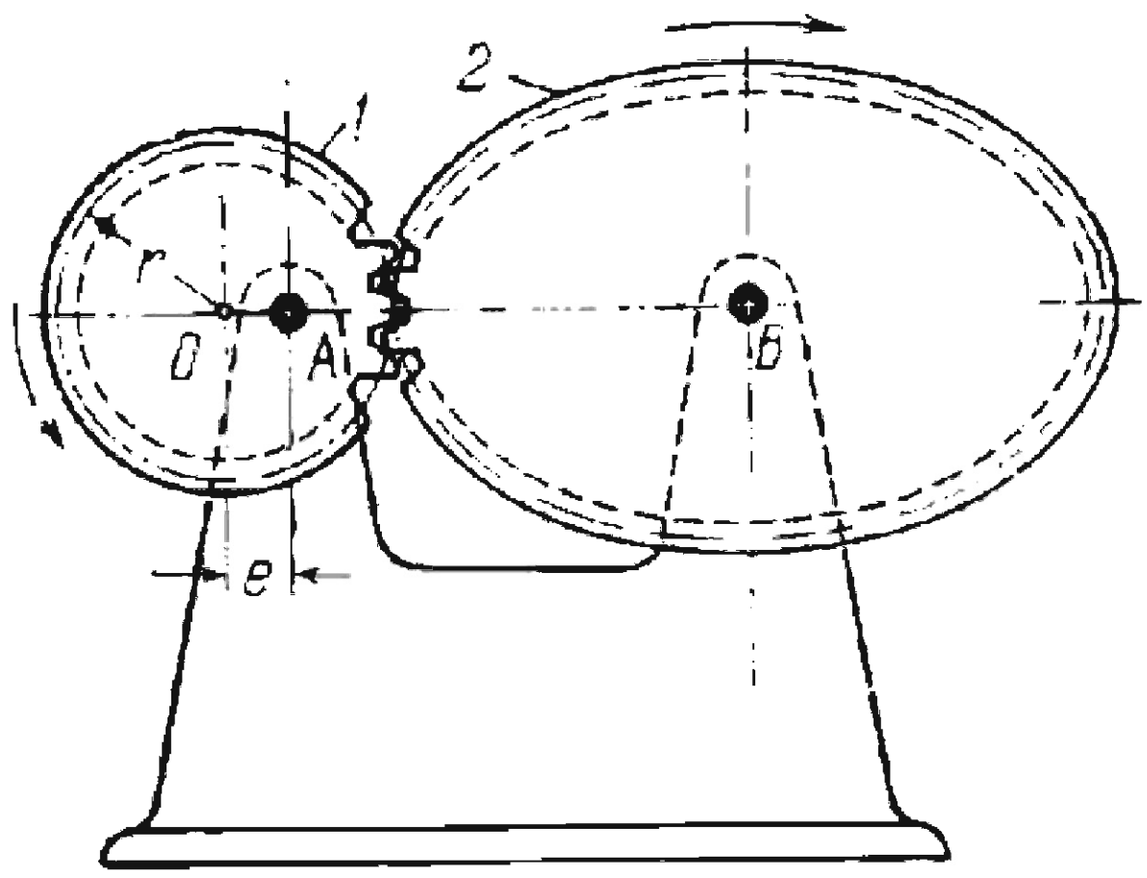

Gears *1* and *2* rotate about fixed axes *A* and *B*. The centre *O* of gear *1* is located eccentrically with respect to its axis *A* of rotation. The eccentricity equals *e*. The pitch radius of gear *1* equals *r*. The length of the centrode of gear *2* equals $4\pi r$. The average transmission ratio in a full cycle of the mechanism is

$$i_{12} = \frac{z_2}{z_1} = 2$$

where z_1 and z_2 are the numbers of teeth of gears *1* and *2*. The transmission ratio varies twice each cycle within the limits from

$i_{min} = 1.73$ to $i_{max} = 2.33$ at $e = 0.1r$
$i_{min} = 1.57$ to $i_{max} = 2.60$ at $e = r/6$
$i_{min} = 1.50$ to $i_{max} = 2.75$ at $e = 0.2\,r$
$i_{min} = 1.40$ to $i_{max} = 3.00$ at $e = r/4$
$i_{min} = 1.31$ to $i_{max} = 3.29$ at $e = 0.3\,r$
$i_{min} = 1.25$ to $i_{max} = 3.50$ at $e = r/3$
$i_{min} = 1.14$ to $i_{max} = 4.00$ at $e = 0.4\,r$
$i_{min} = 1.00$ to $i_{max} = 5.00$ at $e = 0.5\,r$
$i_{min} = 0.88$ to $i_{max} = 6.50$ at $e = 0.6\,r$
$i_{min} = 0.80$ to $i_{max} = 8.00$ at $e = 2r/3$
$i_{min} = 0.77$ to $i_{max} = 9.00$ at $e = 0.7\,r$
$i_{min} = 0.72$ to $i_{max} = 11.0$ at $e = 3r/4$

2310	THREE-LINK TOOTHED GEARING WITH CIRCULAR-ECCENTRIC AND NONCIRCULAR GEARS	SG 3L

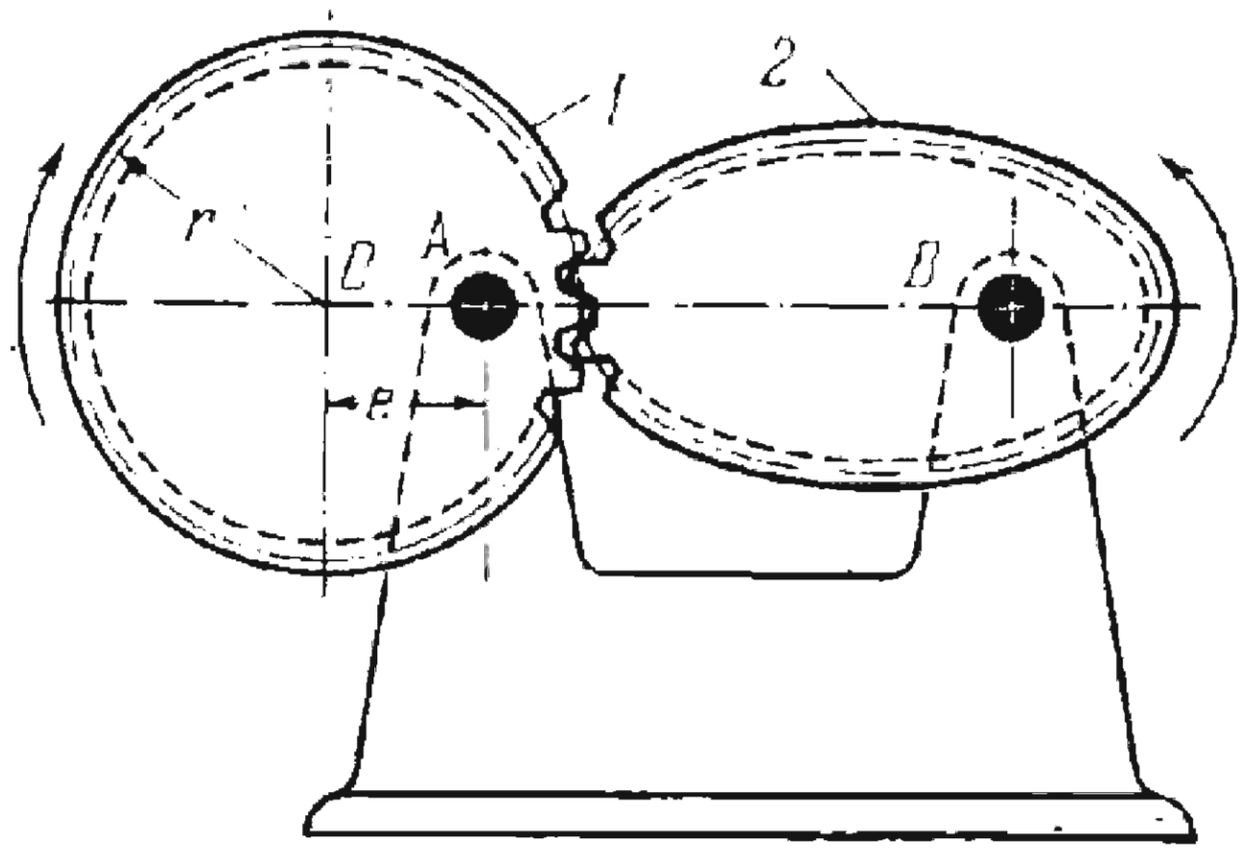

Gears *1* and *2* rotate about fixed axes *A* and *B*. The centre *O* of gear *1* is located eccentrically with respect to its axis *A* of rotation. The eccentricity equals *e*. The pitch radius of gear *1* equals *r*. The length of the centrode of gear *2* equals $2\pi r$. The average transmission ratio in a full cycle of the mechanism is

$$i_{12} = \frac{z_2}{z_1} = 1$$

where z_1 and z_2 are the numbers of teeth of gears *1* and *2*. The transmission ratio varies once each cycle within the limits from

$i_{min} = 0.82$ to $i_{max} = 1.23$ at $e = 0.1\,r$
$i_{min} = 0.73$ to $i_{max} = 1.41$ at $e = r/6$
$i_{min} = 0.68$ to $i_{max} = 1.53$ at $e = 0.2\,r$
$i_{min} = 0.63$ to $i_{max} = 1.71$ at $e = r/4$
$i_{min} = 0.57$ to $i_{max} = 1.92$ at $e = 0.3\,r$
$i_{min} = 0.54$ to $i_{max} = 2.08$ at $e = r/3$
$i_{min} = 0.49$ to $i_{max} = 2.47$ at $e = 0.4\,r$
$i_{min} = 0.42$ to $i_{max} = 3.25$ at $e = 0.5\,r$
$i_{min} = 0.36$ to $i_{max} = 4.45$ at $e = 0.6\,r$
$i_{min} = 0.33$ to $i_{max} = 5.67$ at $e = 2r/3$
$i_{min} = 0.32$ to $i_{max} = 6.48$ at $e = 0.7\,r$
$i_{min} = 0.30$ to $i_{max} = 8.13$ at $e = 3r/4$

2311	THREE-LINK TOOTHED GEARING WITH CIRCULAR-ECCENTRIC AND NONCIRCULAR GEARS	SG 3L

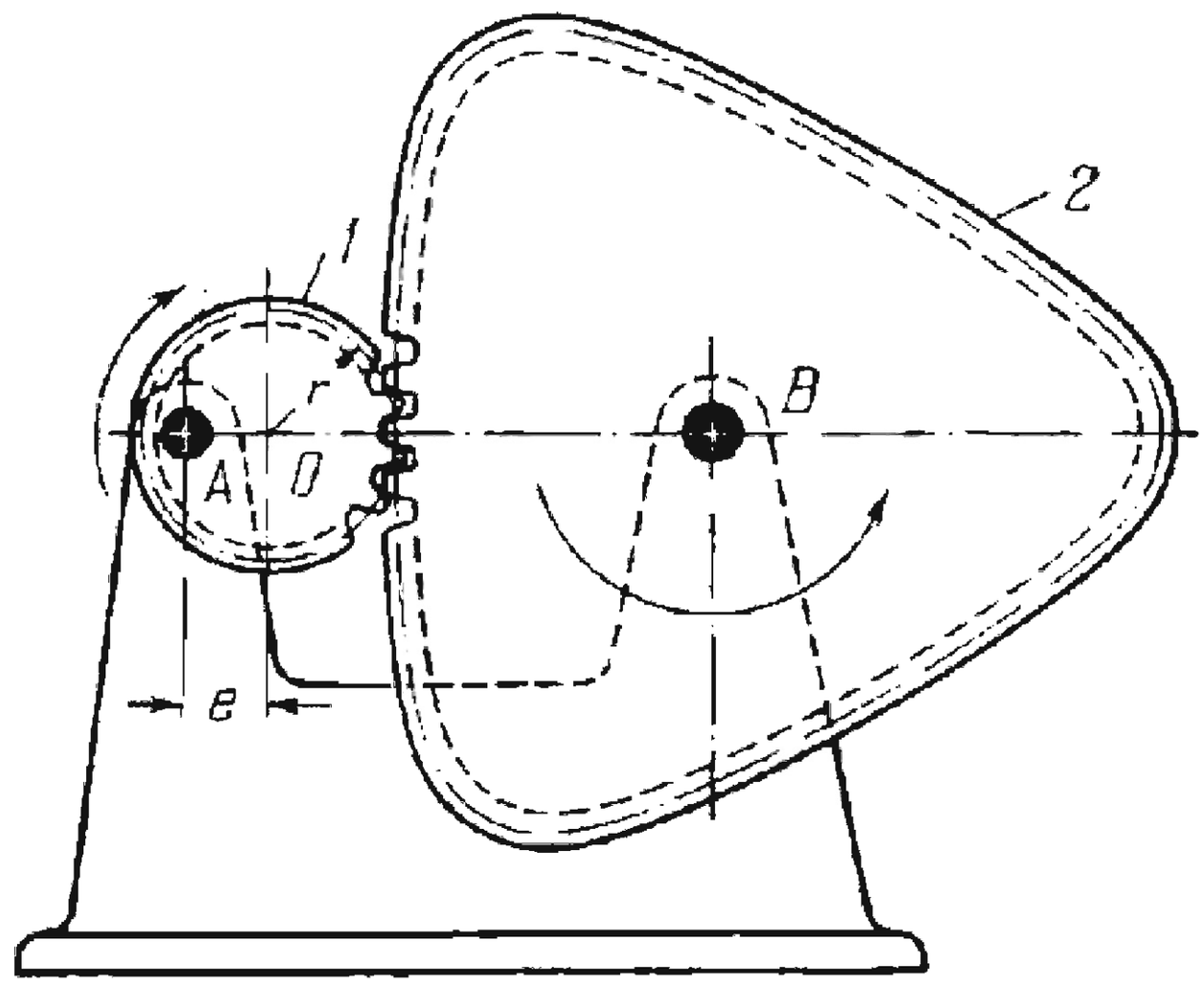

Gears *1* and *2* rotate about fixed axes *A* and *B*. The centre *O* of gear *1* is located eccentrically with respect to its axis *A* of rotation. The eccentricity equals *e*. The pitch radius of gear *1* equals *r*. The length of the centrode of gear *2* equals $6\pi r$. The average transmission ratio in a full cycle of the mechanism is

$$i_{12} = \frac{z_2}{z_1} = 3$$

where z_1 and z_2 are the numbers of teeth of gears *1* and *2*. The transmission ratio varies three times each cycle within the limits from

$i_{min} = 2.65$ to $i_{max} = 3.44$ at $e = 0.1\,r$
$i_{min} = 2.42$ to $i_{max} = 3.79$ at $e = r/6$
$i_{min} = 2.32$ to $i_{max} = 3.98$ at $e = 0.2\,r$
$i_{min} = 2.18$ to $i_{max} = 4.31$ at $e = r/4$
$i_{min} = 2.05$ to $i_{max} = 4.67$ at $e = 0.3\,r$
$i_{min} = 1.97$ to $i_{max} = 4.94$ at $e = r/3$
$i_{min} = 1.81$ to $i_{max} = 5.58$ at $e = 0.4\,r$
$i_{min} = 1.61$ to $i_{max} = 6.83$ at $e = 0.5\,r$
$i_{min} = 1.42$ to $i_{max} = 8.70$ at $e = 0.6\,r$
$i_{min} = 1.31$ to $i_{max} = 10.6$ at $e = 2r/3$
$i_{min} = 1.26$ to $i_{max} = 11.8$ at $e = 0.7\,r$
$i_{min} = 1.18$ to $i_{max} = 16.3$ at $e = 3r/4$

2312	THREE-LINK CENTRODE GEARING WITH A NONCIRCULAR PINION AND A RACK	SG 3L

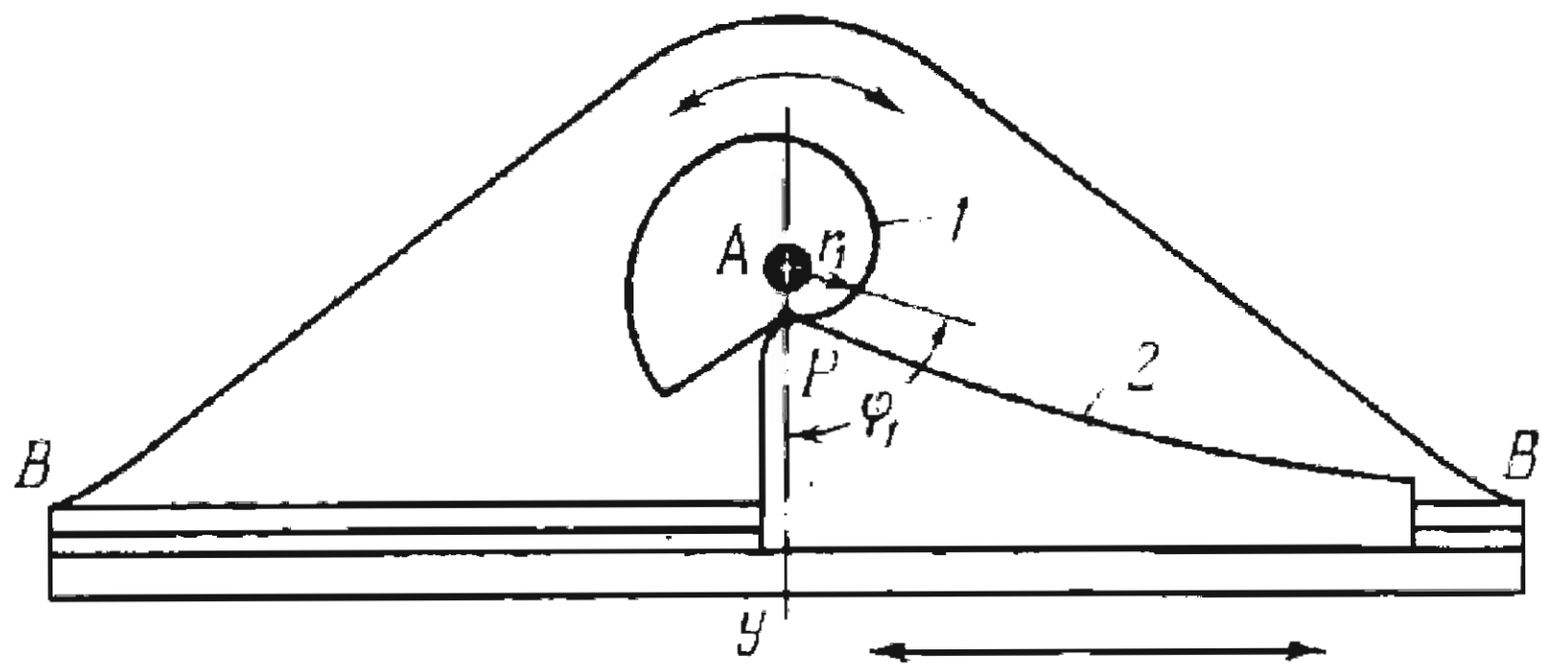

Wheel *1* rotates about fixed axis *A*. Rack *2* slides along fixed straight guides *B-B*. The outlines of wheel *1* and rack *2* are centrodes in their relative motion. The angle φ_1 of rotation and angular velocity ω_1 of wheel *1* are related to the displacement s_2 and velocity v_2 of rack *2* by the equation

$$\frac{v_2}{\omega_1} = \frac{ds_2}{d\varphi_1} = \overline{AP}$$

where *P* is the point of contact of the outlines and always lies on line *Ay* which is perpendicular to the axis of guides *B-B*. The outline of wheel *1* is composed of a portion of an Archimedian spiral with the equation

$$r_1 = 2a\varphi_1$$

where r_1 is the radius vector and *a* is the constant factor of the spiral. The displacement of rack *2* is

$$s_2 = a\varphi_1^2$$

i.e. the mechanism generates a quadratic relationship and the outline of rack *2* is a portion of a parabola.

2313	THREE-LINK TOOTHED GEARING WITH ALTERNATING ROTATION OF THE DRIVEN GEAR	SG 3L

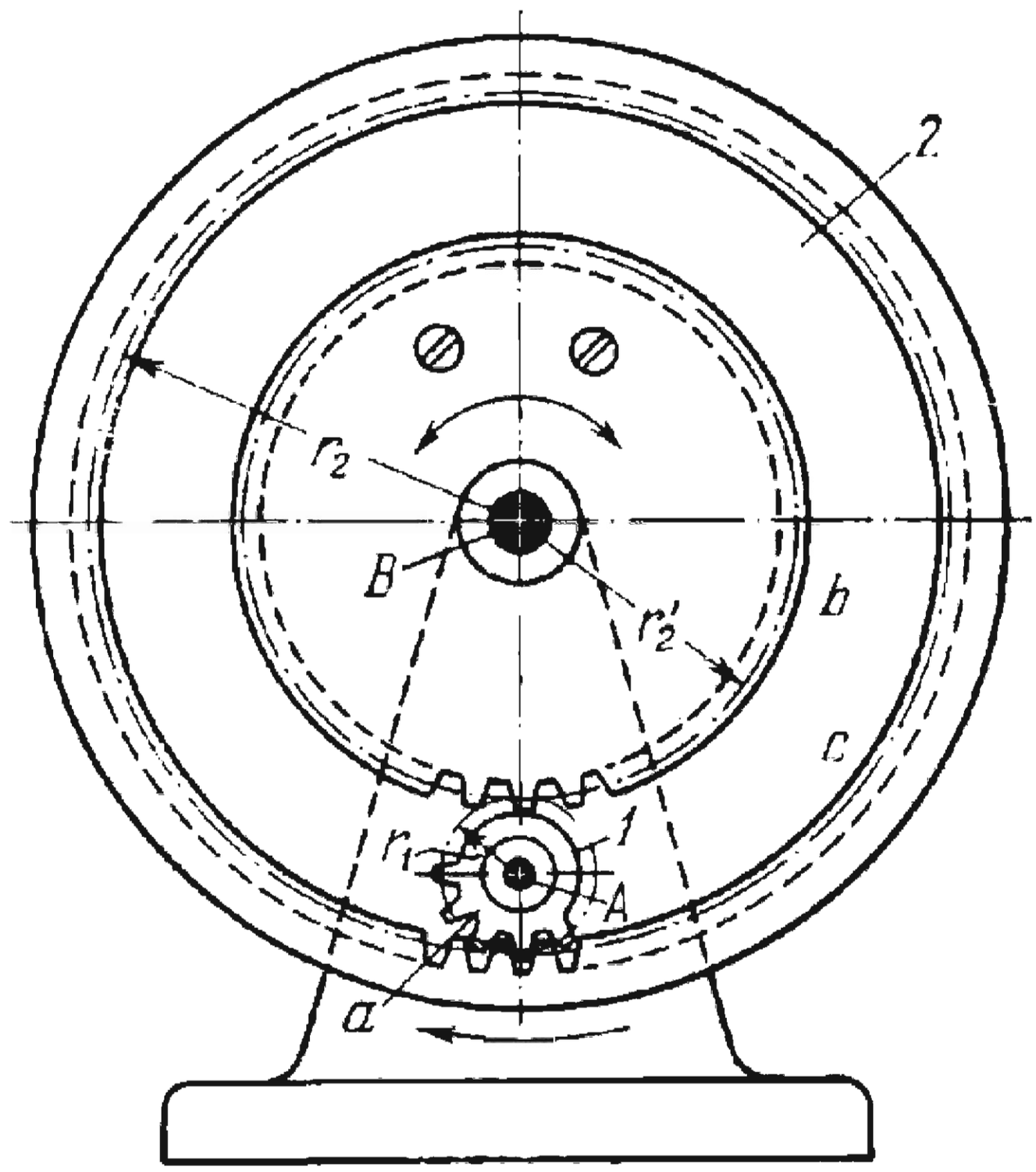

Pinion *1* is designed as a segment gear and rotates about fixed axis *A*. Gear *2* has external teeth *b* and internal teeth *c* that mesh alternately with pinion *1*, and rotates about fixed axis *B*. When pinion *1* rotates constantly in one direction, driven gear *2* rotates alternately in each direction. Angle φ_2 of clockwise rotation of gear *2* is

$$\varphi_2 = \frac{r_1}{r_2}\varphi_1$$

and angle φ_2' of counterclockwise rotation of gear *2* is

$$\varphi_2' = \frac{r_1}{r_2'}\varphi_1$$

where r_1, r_2 and r_2' are the pitch radii of gears *1* and *2*, and angle φ_1 is the angle of rotation of gear *1*. Angle φ_2' is larger than angle φ_2 by the ratio

$$\frac{r_2}{r_2'}$$

i.e.

$$\varphi_2' = \frac{r_2}{r_2'}\varphi_2$$

To ensure continuous rotation of gear *2* with short stops only at the extreme positions (at reversal) of the toothed segment, gear *1* is to be designed so that the segment begins to mesh with internal teeth *c* at the instaut it runs out of engagement with external teeth *b*. Impacts at the instant of engagement are avoided by the provision of supplementary conjugate cam surfaces having profiles with special curves.

2314	THREE-LINK TOOTHED GEARING WITH A TWO-STAGE TRANSMISSION RATIO	SG 3L

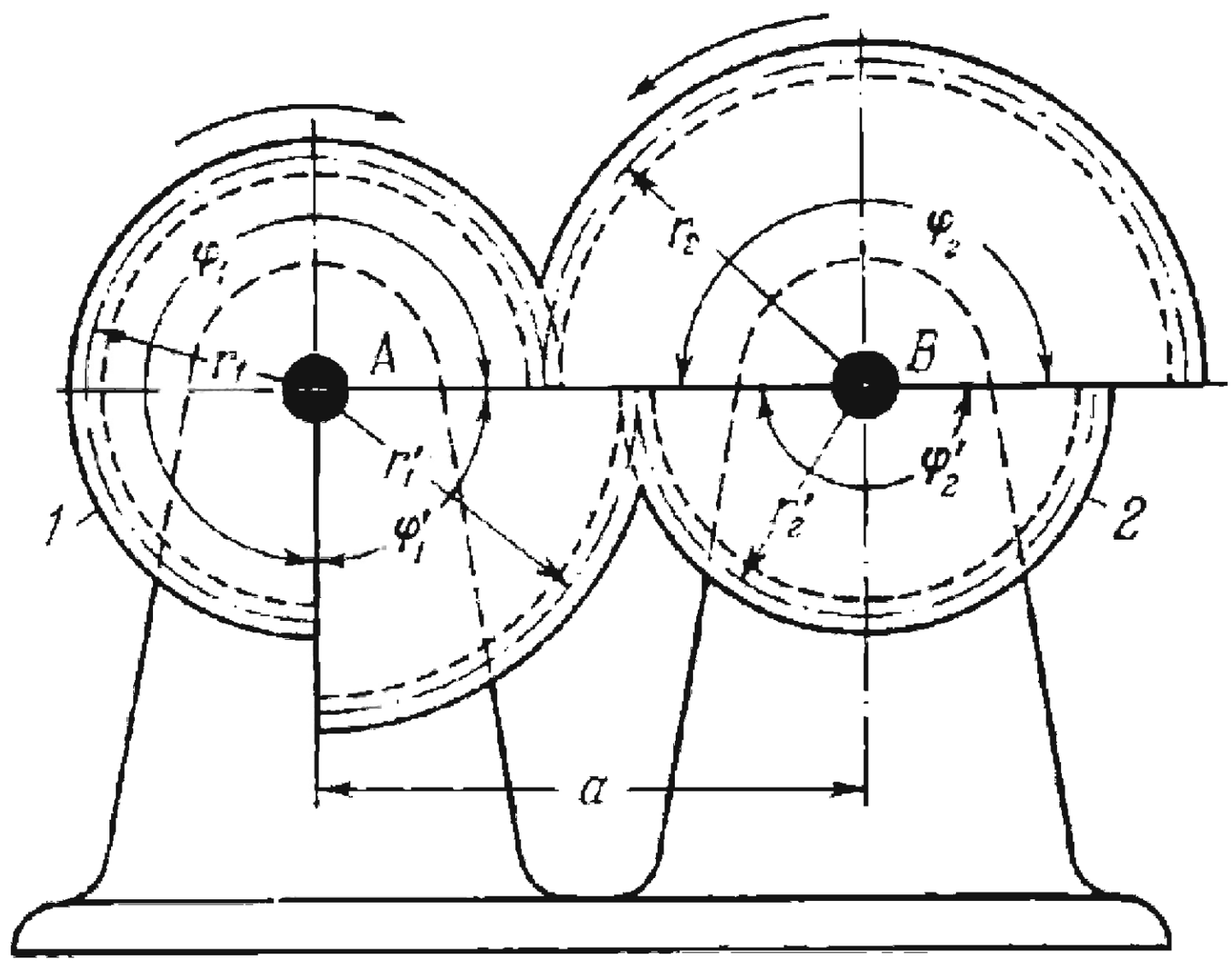

Gears *1* and *2* rotate about fixed axes *A* and *B*. Each gear is composed of two gear segments with the pitch radii r_1, r_1', r_2 and r_2'. Taking the sign of the angular velocities into account, the transmission ratio of the mechanism changes twice each cycle and equals

$$i_{12} = \frac{\omega_1}{\omega_2} = -\frac{r_2}{r_1} = -\frac{z_2}{z_1} \quad \text{and} \quad i_{12}' = \frac{\omega_1'}{\omega_2'} = -\frac{r_2'}{r_1'} = -\frac{z_2'}{z_1'}$$

where ω_1, ω_1', ω_2 and ω_2' are the angular velocities of gears *1* and *2*, and z_1, z_1', z_2 and z_2' are the numbers of teeth of full gears having the same pitch radii as the corresponding gear segments. The pitch radii of the gear segments are related to their central angles φ_1, $\varphi_1' = 2\pi - \varphi_1$, φ_2 and $\varphi_2' = 2\pi - \varphi_2$ by the conditions:

$$r_1 = \frac{a\varphi_2}{\varphi_1 + \varphi_2} \qquad r_1' = \frac{a\varphi_2'}{\varphi_1' + \varphi_2'}$$

$$r_2 = \frac{a\varphi_1}{\varphi_1 + \varphi_2} \qquad r_2' = \frac{a\varphi_1'}{\varphi_1' + \varphi_2'}$$

where a is the centre-to-centre distance. For the given mechanism $\varphi_1 = 3\varphi_1'$ and $\varphi_2 = \varphi_2'$. Therefore, $r_1 = 0.4\,a$, $r_2 = 0.6\,a$, $r_1' = 0.67\,a$ and $r_2' = 0.33\,a$. Impacts at the instants of transition from the engagement of one pair of gear segments to that of the other pair are avoided by the provision of supplementary conjugate cam surfaces having profiles with special curves.

2315	THREE-LINK TOOTHED GEARING WITH A THREE-STAGE TRANSMISSION RATIO	SG 3L

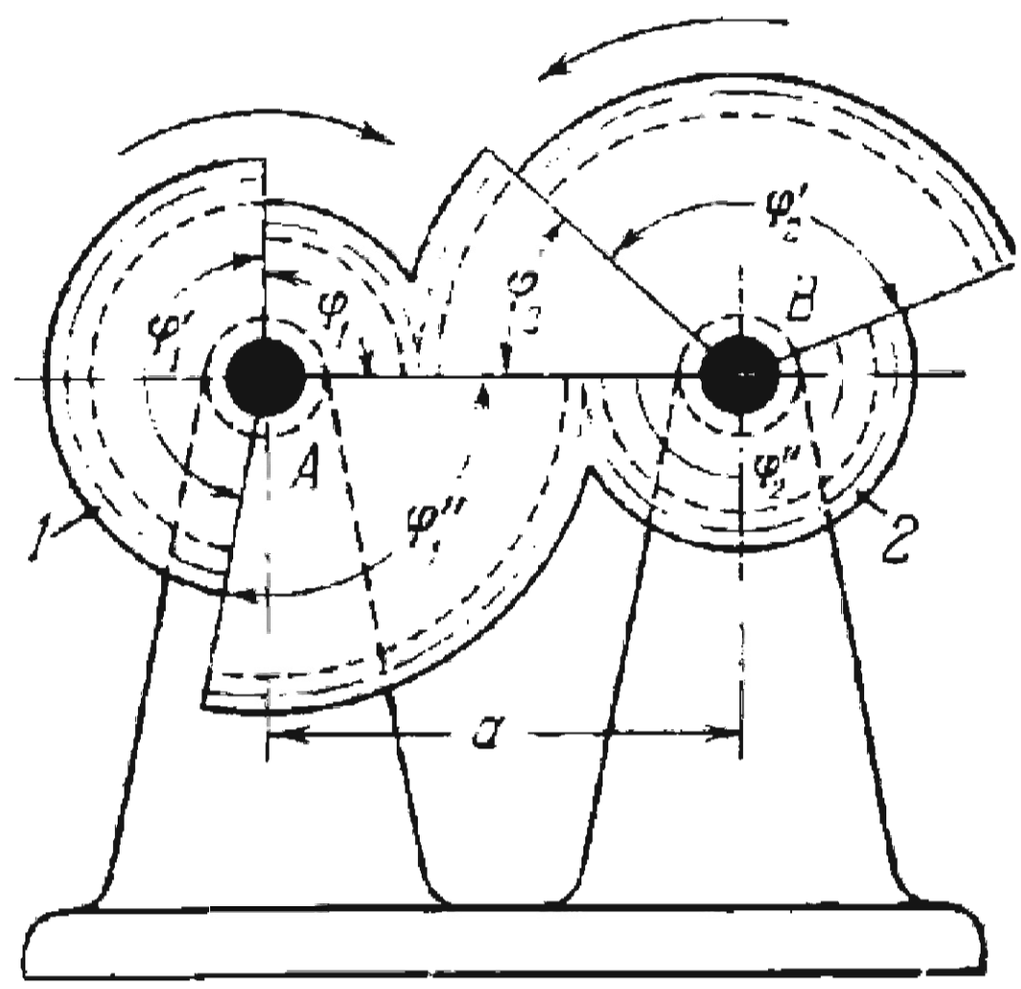

Gears *1* and *2* rotate about fixed axes *A* and *B*. Each gear is composed of three gear segments with the pitch radii r_1, r_1', r_1'', r_2, r_2' and r_2''. Taking the sign of the angular velocities into account, the transmission ratio of the mechanism changes three times each cycle and equals

$$i_{12}=\frac{\omega_1}{\omega_2}=-\frac{r_2}{r_1}=-\frac{z_2}{z_1}\ ;\qquad i_{12}'=\frac{\omega_1'}{\omega_2'}=-\frac{r_2'}{r_1'}=-\frac{z_2'}{z_1'}\ \text{and}$$

$$i_{12}''=\frac{\omega_1''}{\omega_2''}=-\frac{r_2''}{r_1''}=-\frac{z_2''}{z_1''}$$

where ω_1, ω_1', ω_1'', ω_2, ω_2' and ω_2'' are the angular velocities of gears *1* and *2*, and z_1, z_1', z_1'', z_2, z_2' and z_2'' are the numbers of teeth of full gears having the same pitch radii as the corresponding gear segments. The pitch radii of the gear segments are related to their central angles φ_1, φ_1', φ_1'', φ_2, φ_2' and φ_2'' by the conditions

$$r_1=\frac{a\varphi_2}{\varphi_1+\varphi_2}\ ;\qquad r_1'=\frac{a\varphi_2'}{\varphi_1'+\varphi_2'}\ ;\qquad r_1''=\frac{a\varphi_2''}{\varphi_1''+\varphi_2''}\ ;$$

$$r_2=\frac{a\varphi_1}{\varphi_1+\varphi_2}\ ;\qquad r_2'=\frac{a\varphi_1'}{\varphi_1'+\varphi_2'}\ \text{and}\ \ r_2''=\frac{a\varphi_1''}{\varphi_1''+\varphi_2''}$$

where a is the centre-to-centre distance. Impacts at the instants of transition from the engagement of one pair of gear segments to that of another pair are avoided by the provision of supplementary conjugate cam surfaces having profiles with special curves.

2316	THREE-LINK TOOTHED GEARING WITH DOUBLE-RIM CIRCULAR AND NONCIRCULAR GEARS	SG 3L

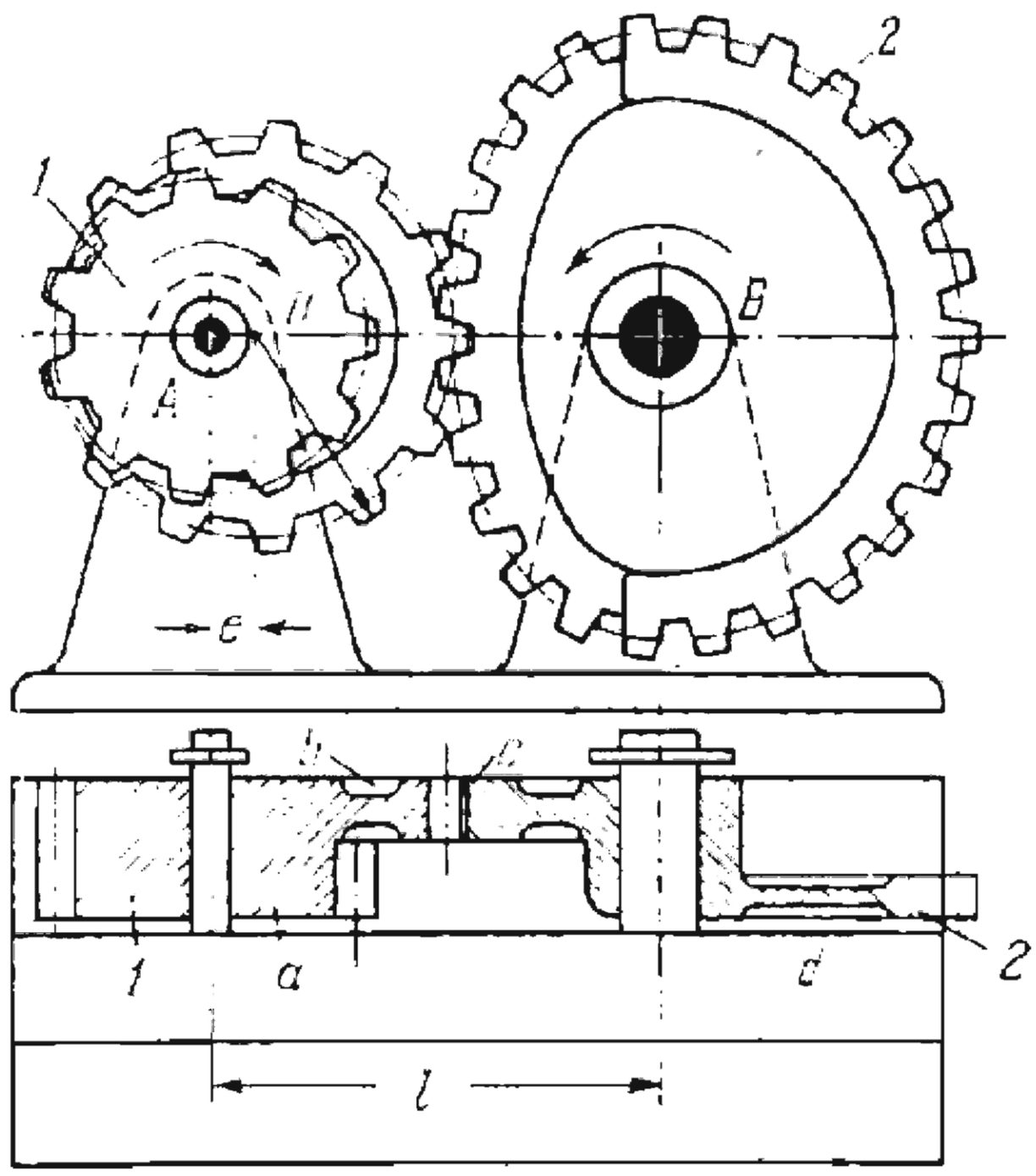

Gears *1* and *2* rotate about fixed axes *A* and *B*. Double-rim gear *1* is composed of circular gears *a* and *b*. The geometric centre of gear *a* coincides with axis *A*. The geometric centre *O* of gear *b* has the eccentricity *e*. Gear *2* is composed of half of noncircular gear *c* and half of circular gear *d*. Gear *2* makes one revolution to two revolutions of gear *1*, and the average transmission ratio in a full cycle is $i_{12} = 2$. When portions *a* and *d* of gears *1* and *2* are in mesh, the transmission ratio is constant and equals $i_{12} = 2$. When portions *b* and *c* of gears *1* and *2* are in mesh, the transmission ratio varies within the limits from

$$i_{\min} = \frac{1-\varepsilon}{m-(1-\varepsilon)} \quad \text{to} \quad i_{\max} = \frac{1+\varepsilon}{m-(1+\varepsilon)}$$

where $\varepsilon = \frac{e}{r_1}$, $m = \frac{l}{r_1}$, r_1 is the pitch radius of gear *b* and *l* is the centre-to-centre distance.

2317	THREE-LINK TOOTHED GEARING WITH ALTERNATING ROTATION OF THE DRIVEN GEAR	SG 3L

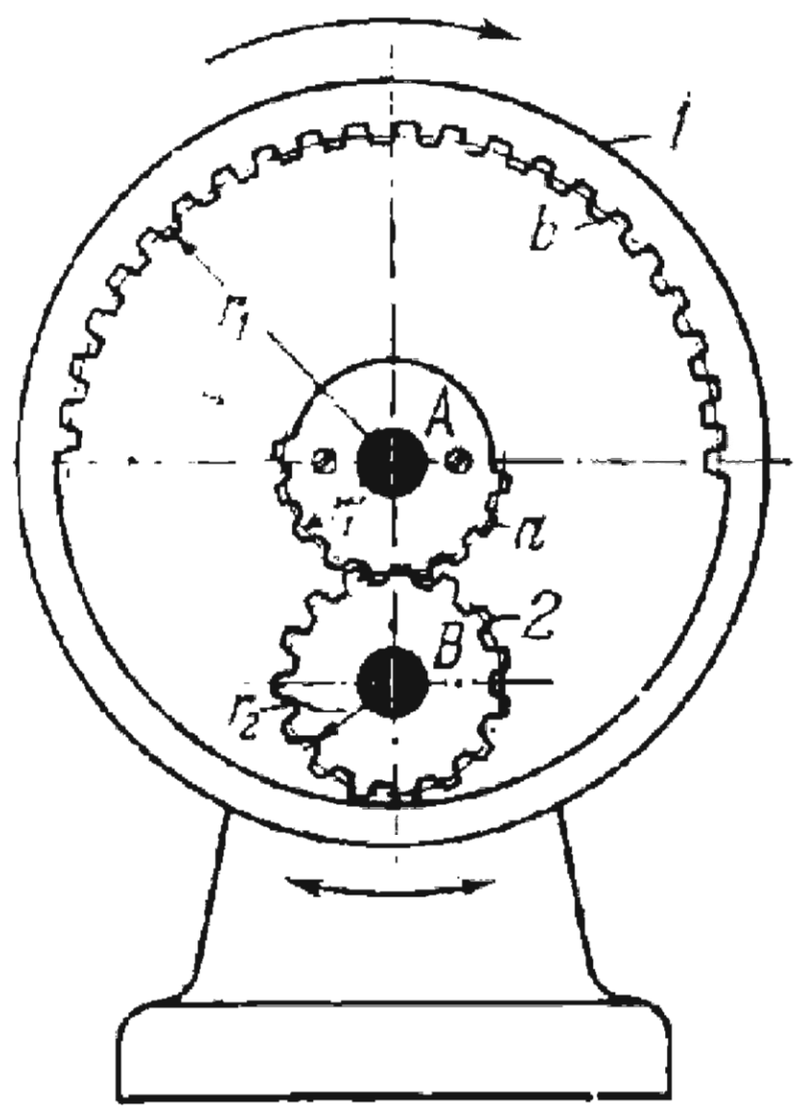

Composite gear *1* has teeth located on external *a* and internal *b* semicircular arcs, and rotates about fixed axis *A*. Pinion *2* rotates about fixed axis *B*. Pitch radii r_1, r_1' and r_2 of gears *1* and *2* comply with the condition $r_1 = 3r_1' = 3r_2$. When gear *1* rotates constantly in one direction, driven pinion *2* rotates alternately in each direction. Angle φ_2' of clockwise rotation of pinion *2* is

$$\varphi_2' = 3\varphi_1$$

and angle φ_2 of counterclockwise rotation of pinion *2* is

$$\varphi_2 = \varphi_1.$$

To ensure continuous rotation of pinion *2* with only short stops at the extreme positions (at reversal), gear *1* is to be designed so that pinion *2* begins to mesh with internal teeth *b* at the instant it runs out of mesh with external teeth *a*. Impacts at the instant of engagement are avoided by the provision of supplementary conjugate cam surfaces having profiles with special curves.

2318	THREE-LINK TOOTHED GEARING WITH A FOUR-STAGE TRANSMISSION RATIO	SG 3L

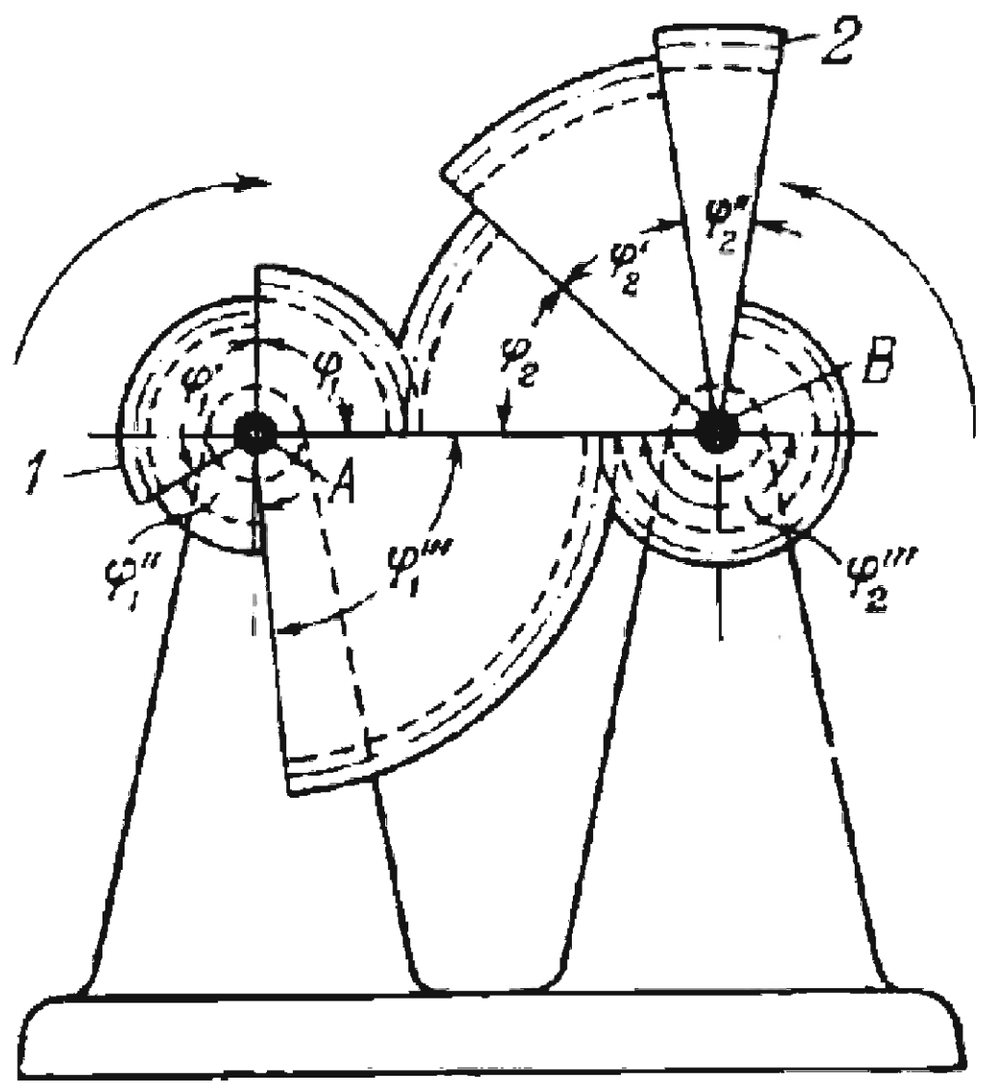

Gears *1* and *2* rotate about fixed axes *A* and *B*. Each gear is composed of four gear segments with the pitch radii r_1, r_1', r_1'', r_1''', r_2, r_2', r_2'' and r_2'''. Taking the sign of the angular velocities into account, the transmission ratio changes four times each cycle and equals

$$i_{12}=\frac{\omega_1}{\omega_2}=-\frac{r_2}{r_1}=-\frac{z_2}{z_1}\,; \qquad i'_{12}=\frac{\omega'_1}{\omega'_2}=-\frac{r'_2}{r'_1}=-\frac{z'_2}{z'_1}\,;$$

$$i''_{12}=\frac{\omega''_1}{\omega''_2}=-\frac{r''_2}{r''_1}=-\frac{z''_2}{z''_1} \quad \text{and} \quad i'''_{12}=\frac{\omega'''_1}{\omega'''_2}=-\frac{r'''_2}{r'''}=-\frac{z'''_2}{z'''_1}$$

where ω_1, ω'_1, ω''_1, ω'''_1, ω_2, ω'_2, ω''_2 and ω'''_2 are the angular velocities of gears *1* and *2*, and z_1, z'_1, z''_1, z'''_1, z_2, z'_2, z''_2 and z'''_2 are the numbers of teeth of full gears having the same pitch radii as the corresponding gear segments. The radii of the gear segments are related to their central angles φ_1, φ'_1, φ''_1, φ'''_1, φ_2, φ'_2, φ''_2 and φ'''_2 by the conditions

$$r_1=\frac{a\varphi_2}{\varphi_1+\varphi_2}\,; \qquad r'_1=\frac{a\varphi'_2}{\varphi'_1+\varphi'_2}\,; \qquad r''_2=\frac{a\varphi''_2}{\varphi''_1+\varphi''_2}\,;$$

$$r'''_1=\frac{a\varphi'''_2}{\varphi'''_1+\varphi'''_2}\,; \qquad r_2=\frac{a\varphi_1}{\varphi_1+\varphi_2}\,; \qquad r'_2=\frac{a\varphi'_1}{\varphi'_1+\varphi'_2}\,;$$

$$r''_2=\frac{a\varphi''_1}{\varphi''_1+\varphi''_2} \quad \text{and} \quad r'''_2=\frac{a\varphi'''_1}{\varphi'''_1+\varphi'''_2}$$

where a is the centre-to-centre distance. Impacts at the instants of transition from the engagement of one pair of gear segments to that of another pair are avoided by the provision of supplementary conjugate cam surfaces having profiles with special curves.

2319	THREE-LINK TOOTHED GEARING WITH ALTERNATING ROTATION OF THE DRIVEN COMPOSITE GEAR	SG 3L

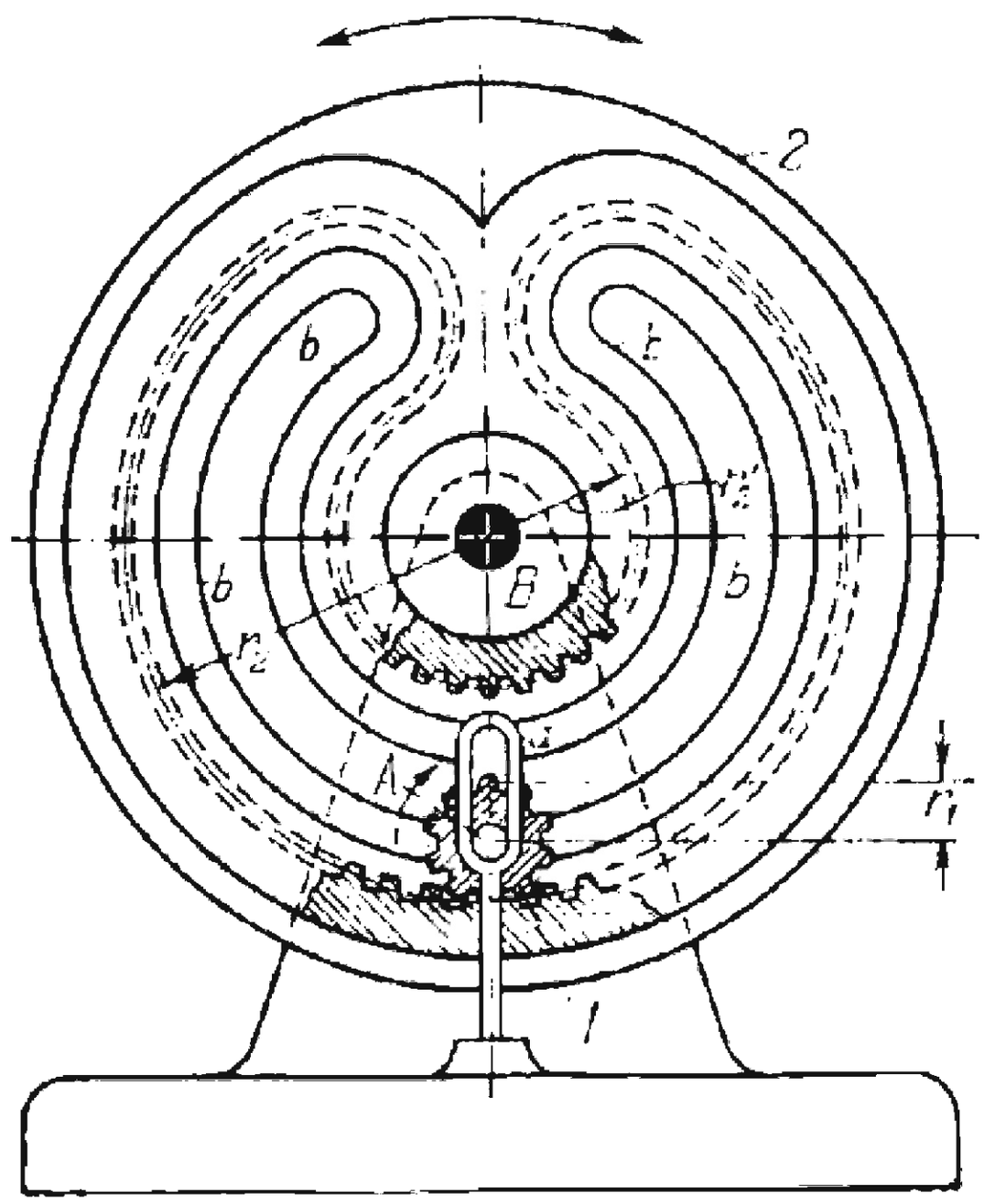

Trunnion *A* of pinion *1* slides along fixed straight guide *a*. Composite gear *2* has circular slot *b* which does not extend around in a complete circle. Gear *2* rotates about fixed axis *B*. The teeth of gear *2* are located on both sides and at the ends of slot *b*, being made up of one internal and one external gear segments and two halves of an internal gear (at the slot ends). When pinion *1* rotates and axis *A* is in its lower position in guide *a*, pinion *1* meshes with the internal gear segment of gear *2* and gears *1* and *2* rotate in the same direction. When axis *A* is in its upper position in guide *a*, pinion *1* meshes with the external gear segment of gear *2* and gears *1* and *2* rotate in opposite directions. Thus gear *2* rotates alternately an incomplete revolution in each direction with dwells at the extreme positions. When pinion *1* meshes with the internal gear segment, gear *2* rotates at the angular velocity $\omega_2 = \omega_1 \frac{r_1}{r_2}$, and when it meshes with the external gear segment, gear *2* rotates with the angular velocity $\omega_2' = \omega_1 \frac{r_1}{r_2'}$, where r_1 is the pitch radius of pinion *1*, r_2 and r_2' are the pitch radii of the internal and external gear segments of gear *2*, and ω_1 is the angular velocity of pinion *1*.

2320	THREE-LINK MANGLE GEARING WITH ALTERNATING ROTATION OF THE DRIVEN GEAR	SG 3L

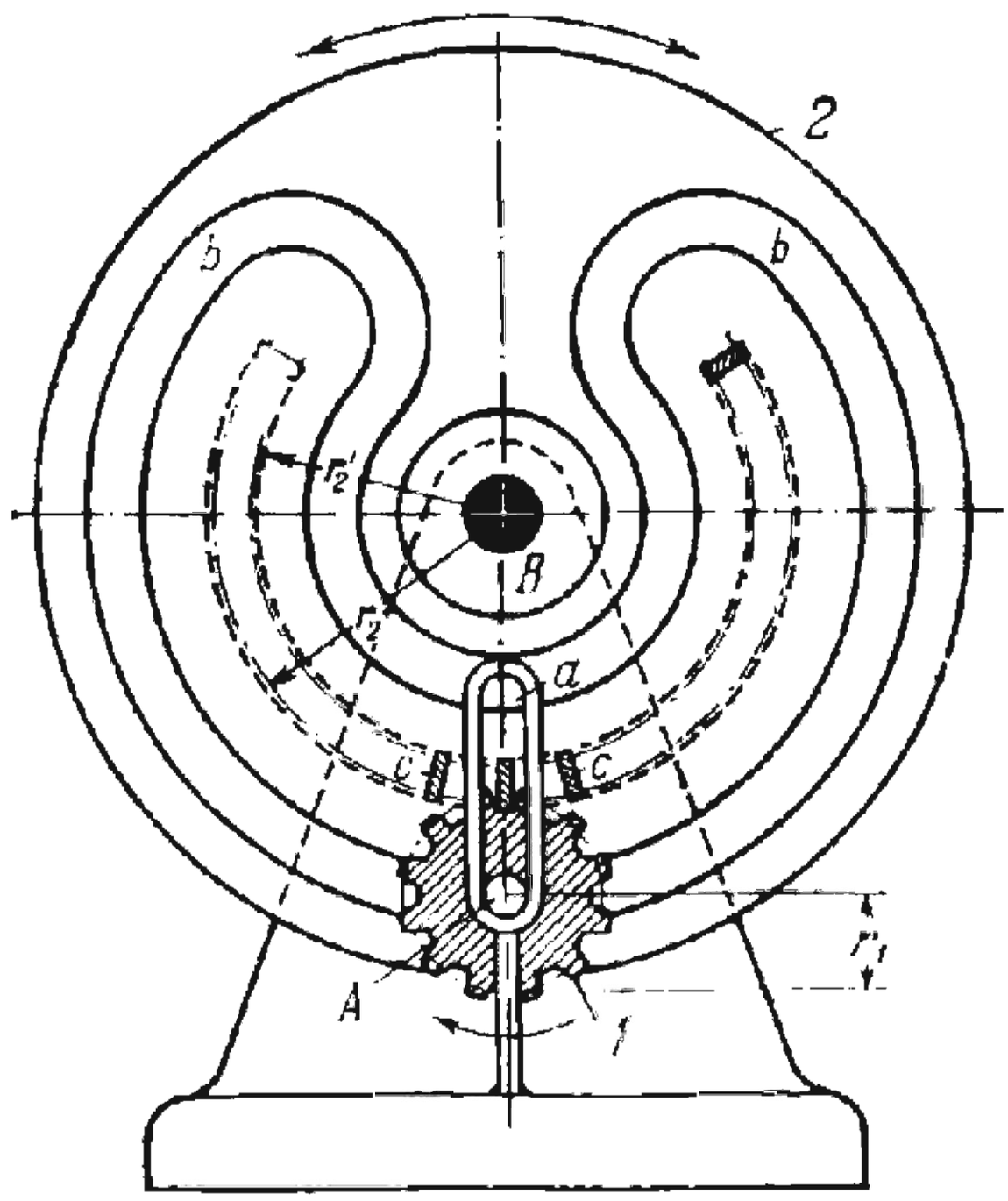

Trunnion *A* of pinion *1* slides along fixed straight guide *a*. Gear *2* has complex slot *b* and rotates about fixed axis *B*. Slot *b* consists of two circular portions not extending around a complete circle and connected together at their ends by semicircular slots. Gear *2* has teeth *c* of the mangle type located in a circular arc within the portions of slot *b*. When pinion *1* rotates and axis *A* is in its lower position in guide *a*, pinion *1* meshes with gear *2* with external engagement (at the outside oteeth *c*) and gears *1* and *2* rotate in opposite directions. When axis *A* is in its upper position in guide *a*, pinion *1* meshes with gear *2* with internal engagement (at the inside of teeth *c*), and gears *1* and *2* rotate in the same direction. Thus gear *2* rotates alternately an incomplete revolution in each direction with dwells at the extreme positions. When pinion *1* meshes externally with teeth *c* (trunnion *A* slides along the outer portion of slot *b*), gear *2* rotates at the angular velocity $\omega_2 = \omega_1 \frac{r_1}{r_2}$, and when it meshes internally with teeth *c* (trunnion *A* slides along the inner portion of slot *b*), gear *2* rotates at the angular velocity $\omega_2' = \omega_1 \frac{r_1}{r_2'}$, where r_1 is the pitch radius of pinion *1*, r_2 and r_2' are the pitch radii of teeth *c* for external and internal engagement with pinion *1*, and ω_1 is the angular velocity of pinion *1*.

2321	THREE-LINK TOOTHED DUPLEX RACK-AND-PINION GEARING	SG 3L

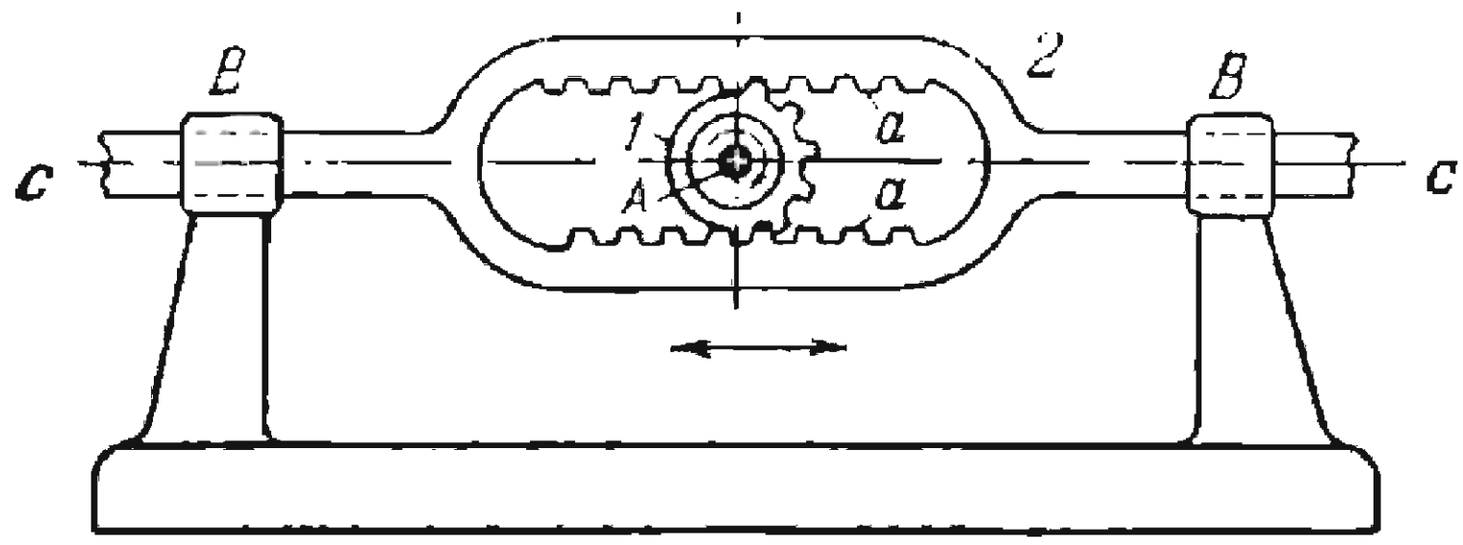

Pinion *1* rotates about fixed axis *A*. Link *2* reciprocates along axis *c-c* in fixed guides *B-B* and has duplex rack *a*. The teeth of pinion *1* are arranged along one half of its pitch circle. When pinion *1* rotates continuously in one direction its teeth alternately engage the two sides of rack *a* imparting a sliding motion to link *2* in the left and right directions. Link *2* has dwells at its extreme end positions.

2322	THREE-LINK TOOTHED COMPLEX RACK-AND-PINION GEARING	SG 3L

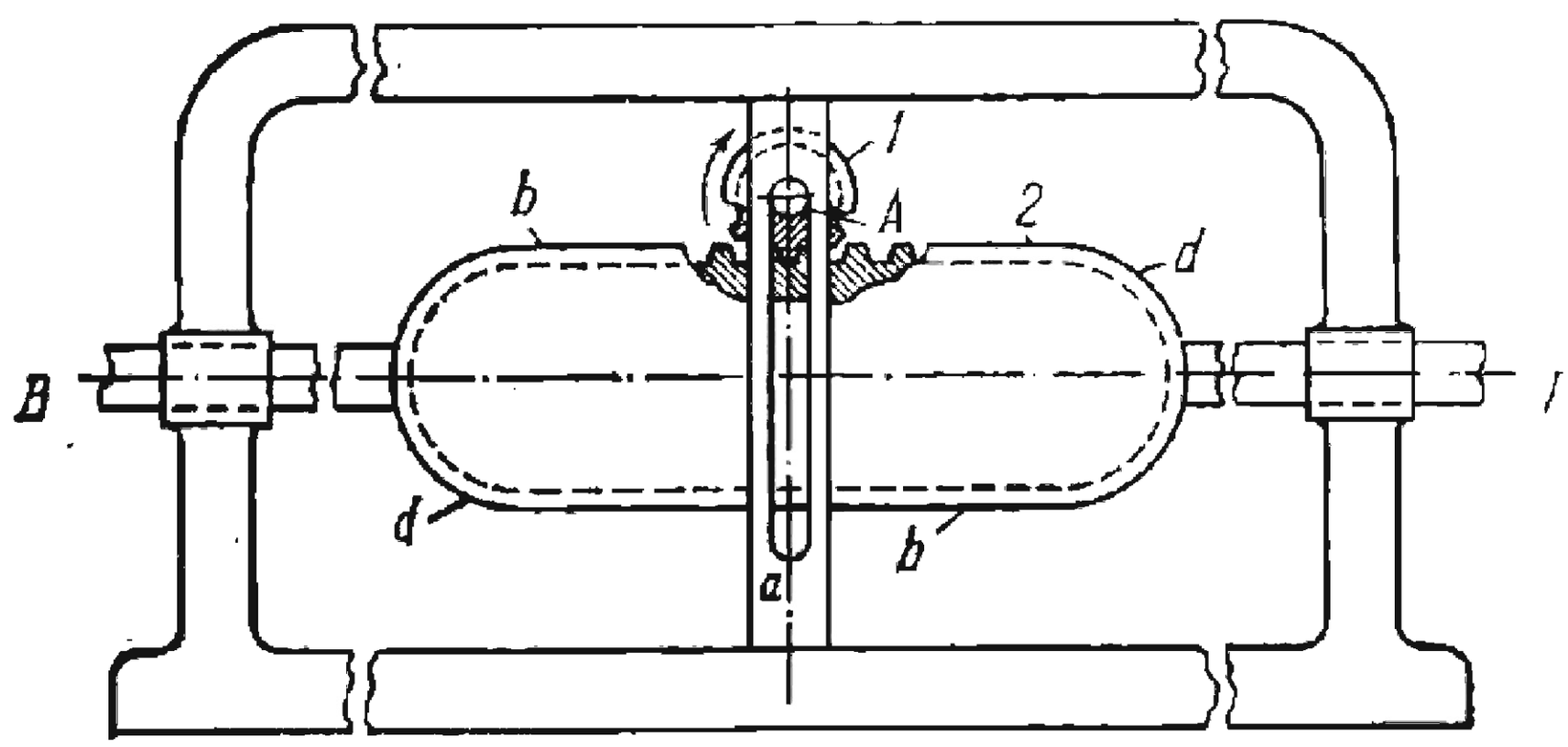

Pinion *1* rotates about axis *A*. The shaft of pinion *1* slides along fixed slot *a*. Complex rack *2* reciprocates in fixed guides *B-B*. The rack is composed of two straight portions *b* and two semicircular portions *d*. When pinion *1* rotates continuously in one direction its teeth mesh successively with the various portions of rack *2*, imparting a sliding motion to rack *2* in the left and right directions. The semicircular portions *d* of the complex rack provide for smoother transition from the upper portion *b* to the lower portion *b* of the rack and vice versa.

2323	THREE-LINK TOOTHED ROUND RACK-AND-PINION GEARING	SG 3L

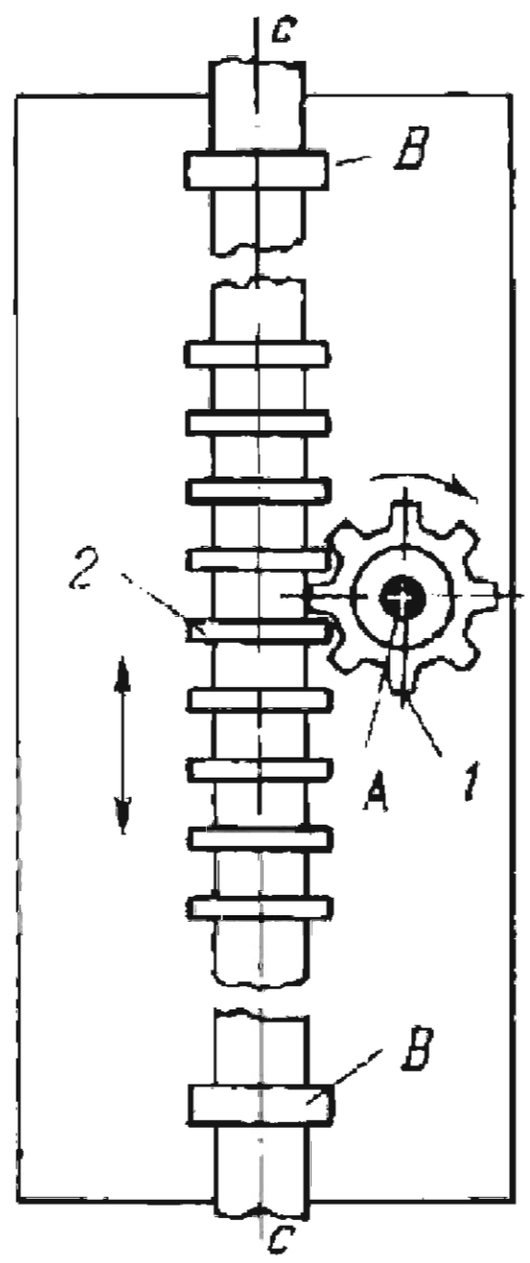

Pinion *1* rotates about fixed axis *A*. Rack *2* is designed as a cylinder with annular teeth. When pinion *1* rotates, rack *2* slides along axis *c-c* in cylindrical guides *B-B*. While the mechanism is in operation, rack *2* can be rotated about axis *c-c*.

2324	THREE-LINK TOOTHED DUPLEX RACK-AND-PINION GEARING WITH SAFETY CAMS	SG 3L

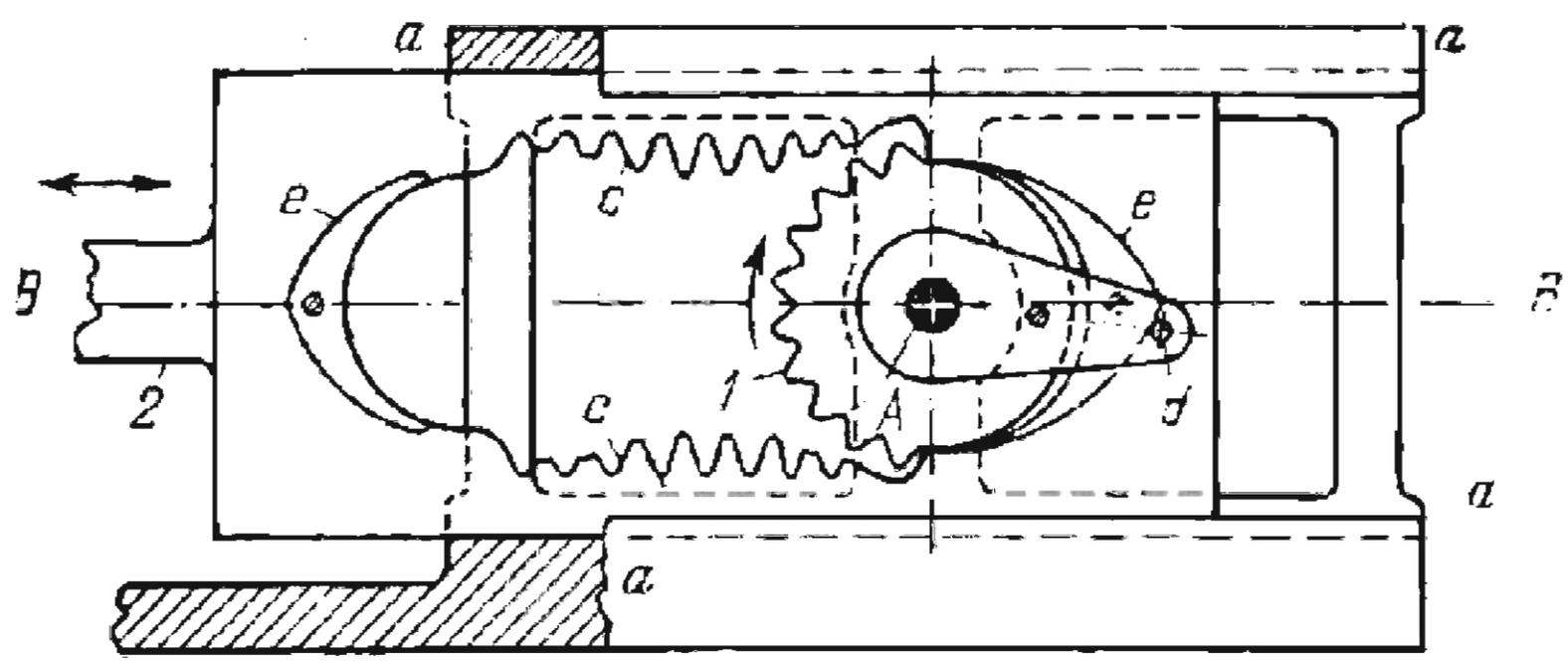

Pinion *1* rotates about fixed axis *A*. Link *2* reciprocates along axis *B-B* in fixed guides *a-a*. Pinion *1* has its teeth arranged along one half of its pitch circle. Link *2* has duplex toothed rack *c*. When pinion *1* rotates continuously in one direction its teeth alternately engage the two sides of rack *c*, imparting a sliding motion to link *2* in the right and left directions. To avoid impacts at the instants of reversal of link *2*, pinion *1* has pin *d* which slides along profiled cams *e* of link *2*.

2325	THREE-LINK TOOTHED DUPLEX RACK-AND-PINION GEARING WITH SAFETY TEETH	SG 3L

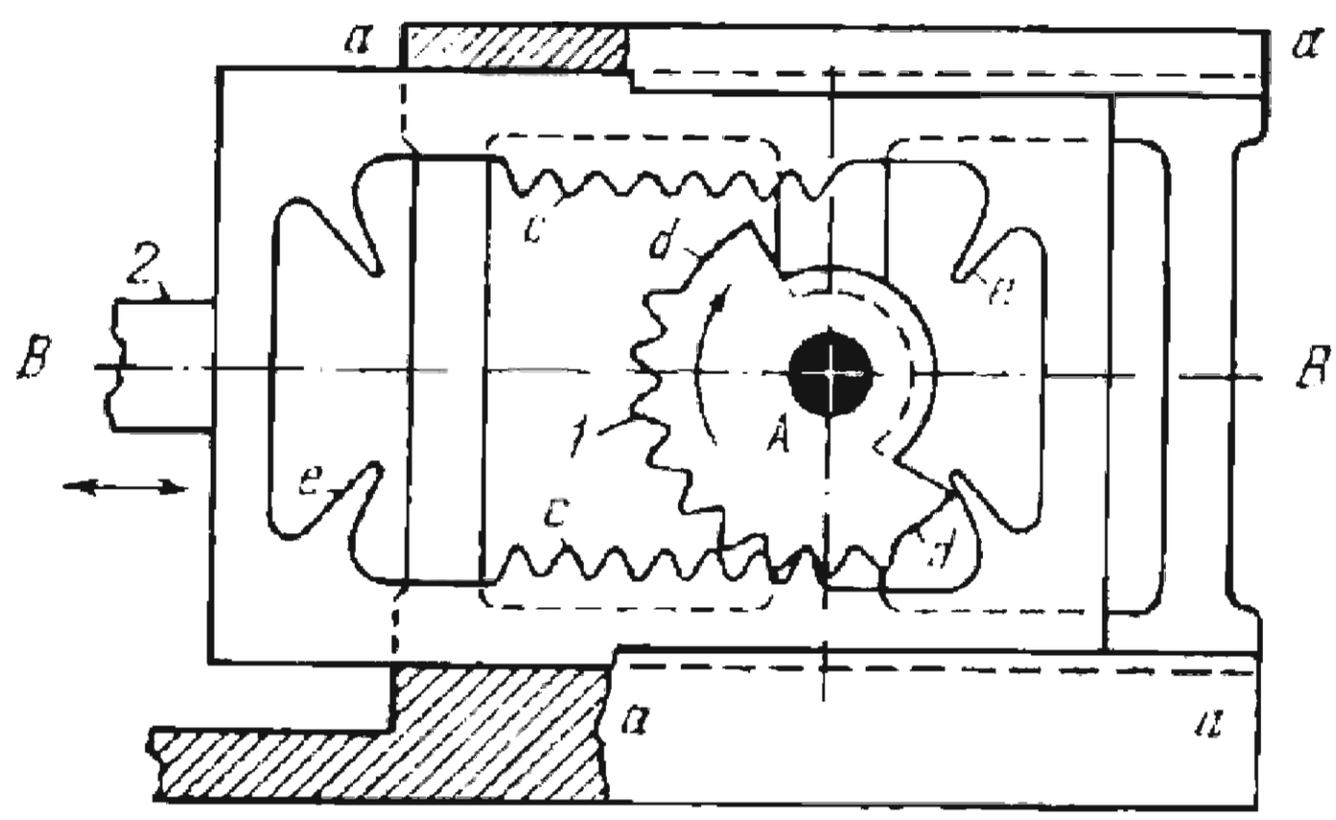

Pinion *1* rotates about fixed axis *A*. Link *2* reciprocates along axis *B-B* in fixed guides *a-a*. Pinion *1* has its teeth arranged along a part of its pitch circle. Link *2* has duplex toothed rack *c*. When pinion *1* rotates continuously in one direction its teeth alternately engage the two sides of rack *c*, imparting a sliding motion to link *2* in the right and left directions. To avoid impacts at the instants of reversal of link *2*, pinion *1* has additional teeth *d* of special profile that engage teeth *e* of rack *c*.

2326	THREE-LINK TOOTHED GEARING WITH A CURVILINEAR OSCILLATING RACK AND ECCENTRIC CIRCULAR PINION	SG 3L

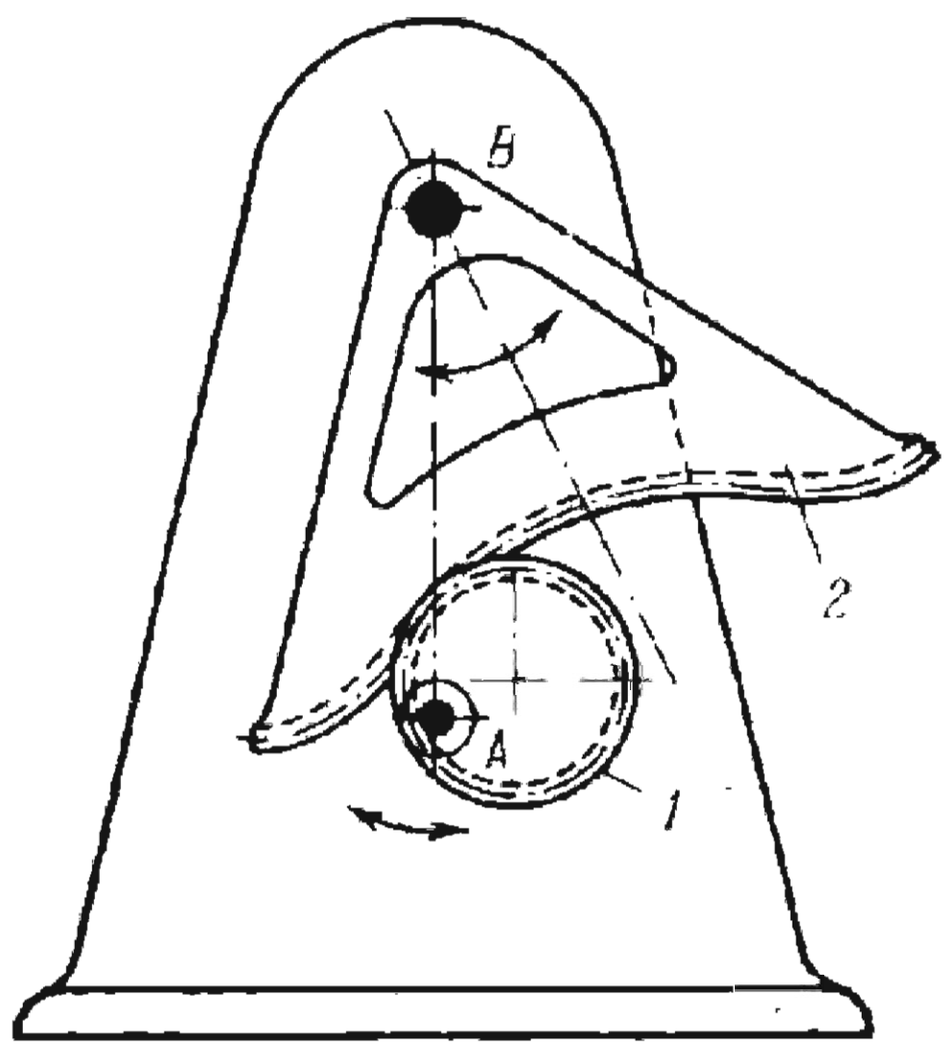

Circular pinion *1* rotates about eccentrically located fixed axis *A* and meshes with curvilinear rack *2* which turns about fixed axis *B*. When pinion *1* is rotated alternately in opposite directions, rack *2* oscillates about axis *B*.

2327	DUPLEX RACK-AND-PINION GEARING WITH A RATCHET WHEEL	SG 3L

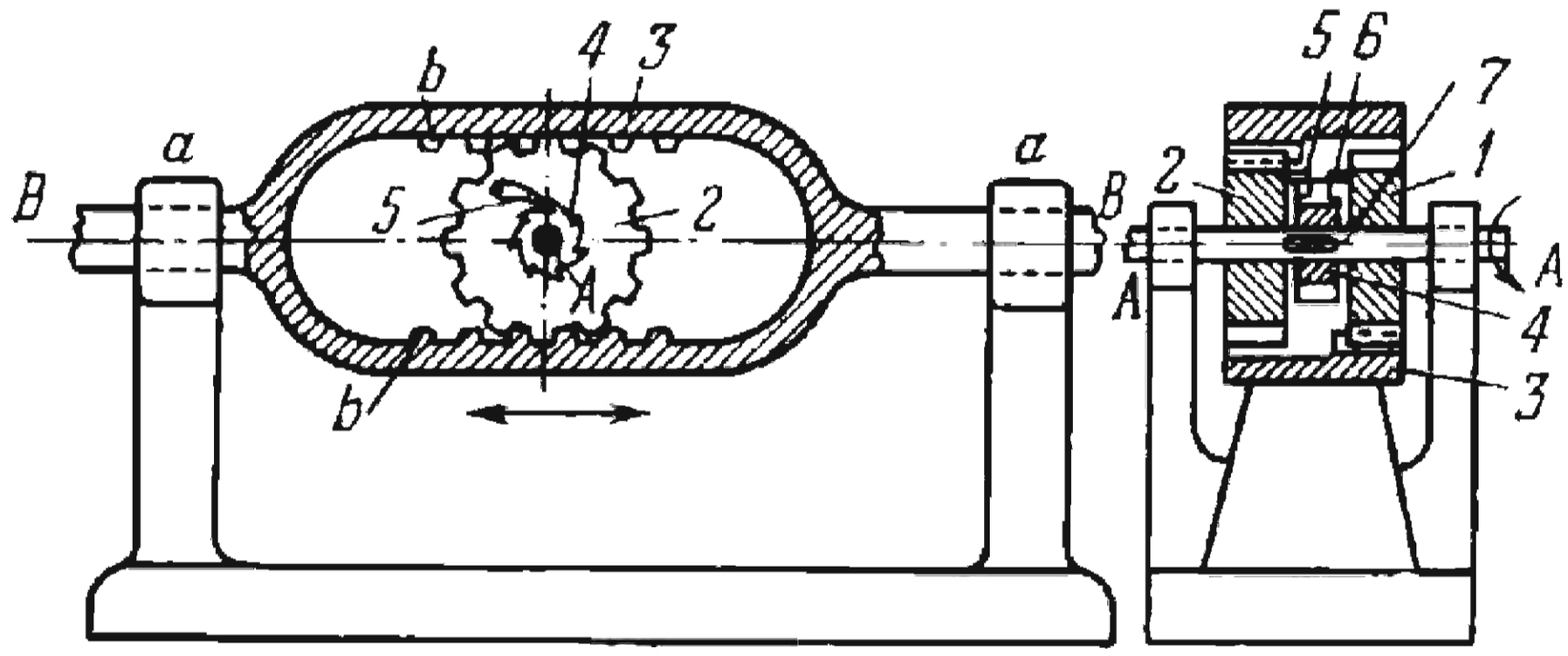

Pinions *1* and *2* rotate about fixed axis *A*. Link *3* reciprocates along axis *B-B* in fixed guides *a-a*. Pinions *1* and *2* rotate freely on shaft *7* and ratchet wheel *4* is keyed on shaft *7* between pinions *1* and *2*. On their inside faces, pinions *1* and *2* carry freely pivoted pawls *6* and *5* which engage ratchet wheel *4*. The pawls are located so that in the reciprocation of link *3* whose rack teeth *b* rotate pinions *1* and *2* in opposite directions, each pawl engages ratchet wheel *4* only when its pinion is rotating clockwise. Thus, being rotated alternately by pinions *1* and *2* through pawls *6* and *5*, ratchet wheel *4* and shaft *7* rotate continuously in one direction (clockwise in this case).

2328	THREE-LINK TOOTHED GEARING FOR DRIVING PARALLEL RACKS	SG 3L

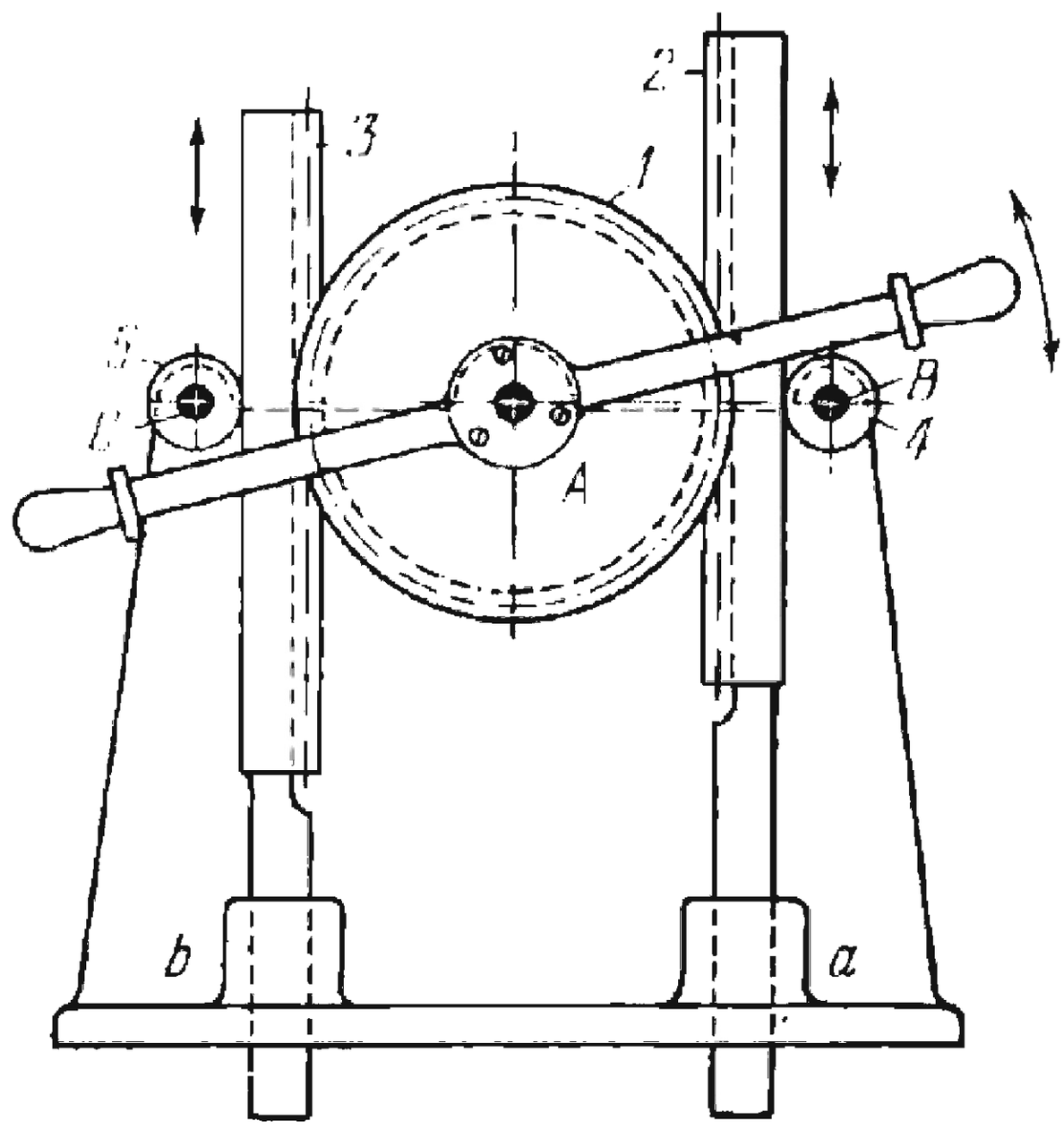

Gear *1* turns about fixed axis *A* and meshes with two parallel toothed racks *2* and *3* which slide in fixed guides *a* and *b*. When gear *1* is oscillated, racks *2* and *3* reciprocate in opposite directions at the same velocity. Racks *2* and *3* slide across rolls *4* and *5* which rotate about fixed axes *B* and *C*.

2329	THREE-LINK OSCILLATING TOOTHED RACK-AND-PINION GEARING	SG 3L

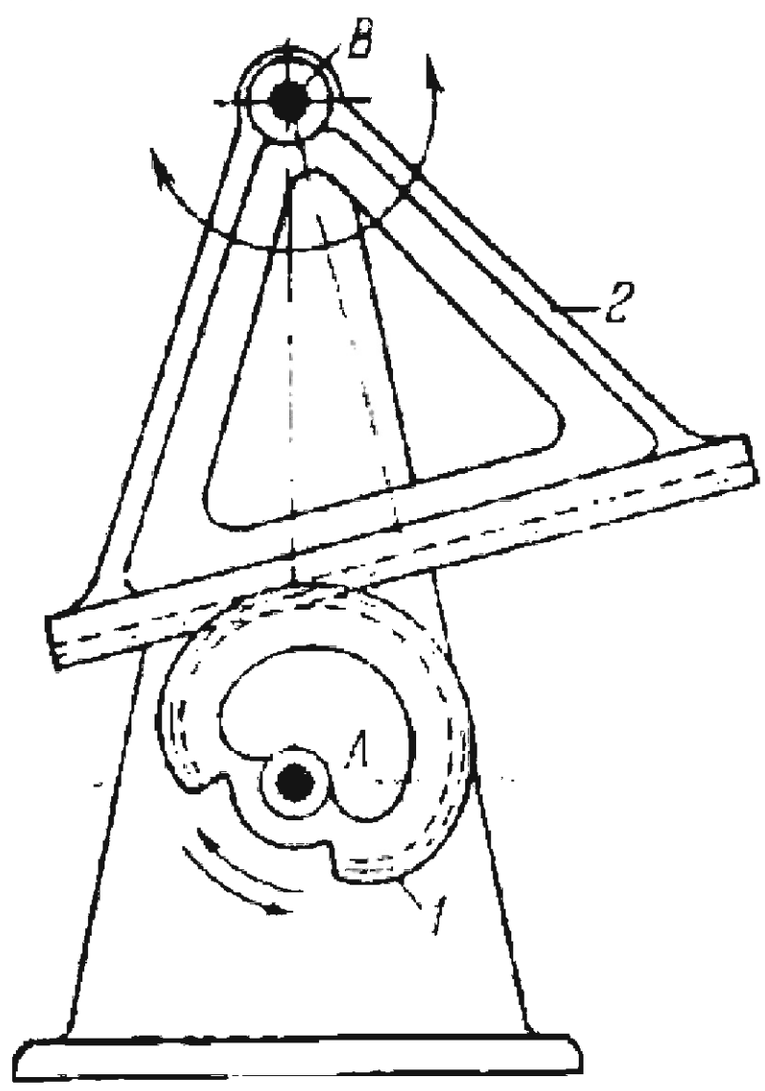

Noncircular pinion *1* turns about fixed axis *A* and meshes with toothed rack *2* which turns about fixed axis *B*. When pinion *1* turns alternately in opposite directions, rack *2* oscillates about axis *B*.

2330	NONREVERSIBLE TOOTHED RACK-AND-PINION GEARING	SG) 3L

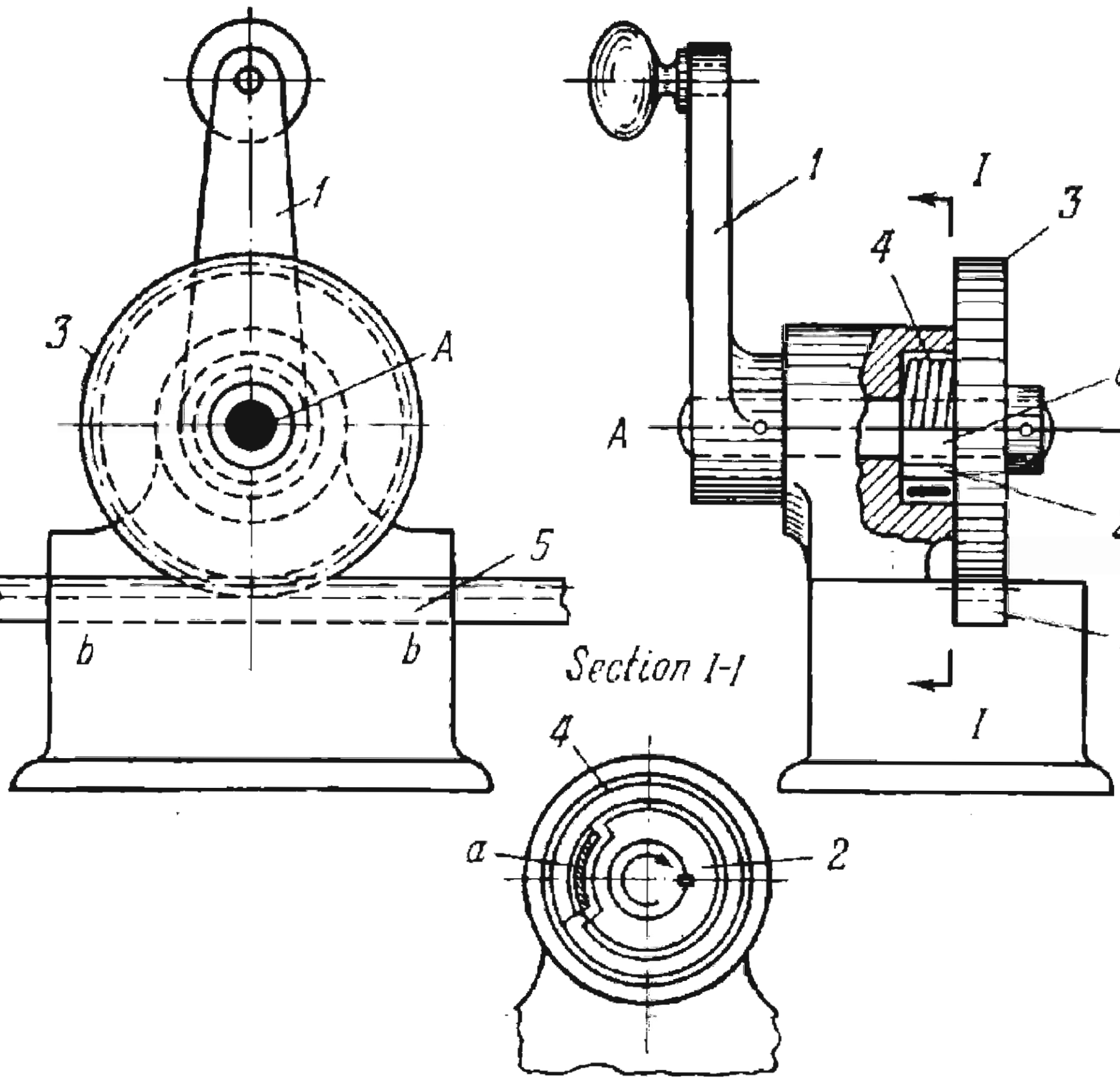

Handle *1* and pinion *3* rotate about fixed axis *A*. Toothed rack *5* slides along fixed guides *b-b*. When handle *1* is turned in either direction and resistance to rotation is applied to pinion *3*, the groove in disk *2* tightens coil spring *4*. This reduces the diameter of spring *4* which grips disk *2* and rotation of handle *1* is thereby transmitted to pinion *3* which moves rack *5*. If the handle is turned in the opposite direction, coil spring *4* is tightened again by the other side of the groove in disk *2* and its diameter is again reduced. When, however, a force is applied to rack *5* and resistance to rotation is applied to handle *1*, spring *4* is loosened so that its diameter is increased and it grips the bore in the bearing. This develops a friction force that impedes the transmission of motion from the rack to the handle.

2331	THREE-LINK EXTERNAL CIRCULAR TOOTHED BEVEL GEARING	SG 3L

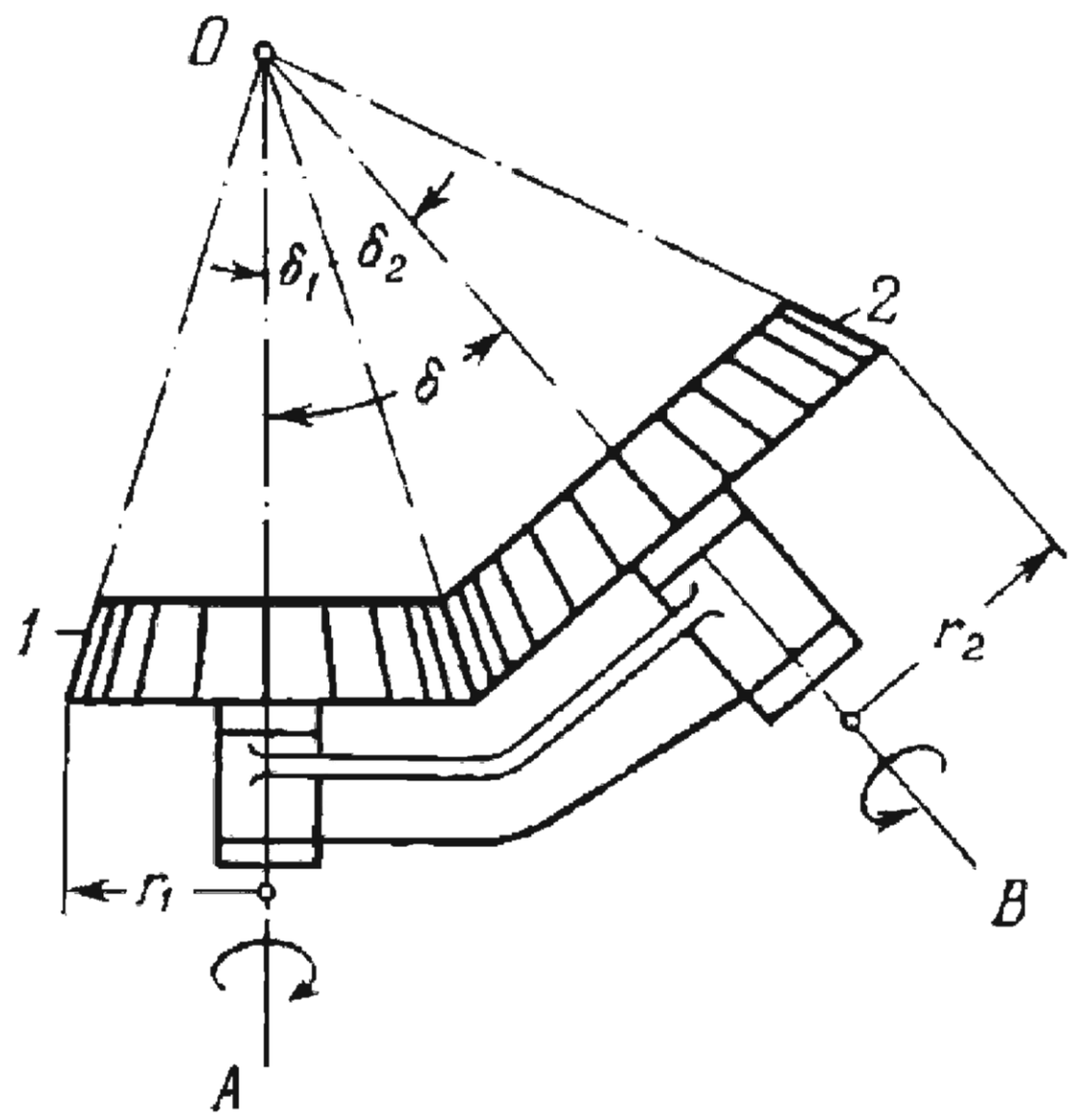

Bevel gears *1* and *2* rotate in opposite directions about fixed axes *OA* and *OB* which intersect at point *O*. Taking the sign of the angular velocities ω_1 and ω_2 of gears *1* and *2* into account, the transmission ratio of the mechanism is

$$i_{12}=\frac{\omega_1}{\omega_2}=-\frac{r^2}{r_1}=-\frac{z_2}{z_1}=-\frac{\sin\delta_2}{\sin\delta_1}=$$

$$=-\frac{\sin\delta-\cos\delta\tan\delta_1}{\tan\delta_1}=-\frac{\tan\delta_2}{\sin\delta-\cos\delta\tan\delta_2}$$

where r_1 and r_2 are the radii of contacting circles on the pitch cones of gears *1* and *2*, z_1 and z_2 are the numbers of teeth of gears *1* and *2*, δ_1 and δ_2 are the pitch cone angles of gears *1* and *2*, and δ is the centre angle (angle between axes *OA* and *OB*). If angle $\delta=\delta_1+\delta_2=90°$ (mitre gears), then the transmission ratio equals $i_{12}=-\tan\delta_2=-\cot\delta_1$.

2332	THREE-LINK INTERNAL CIRCULAR TOOTHED BEVEL GEARING	SG 3L

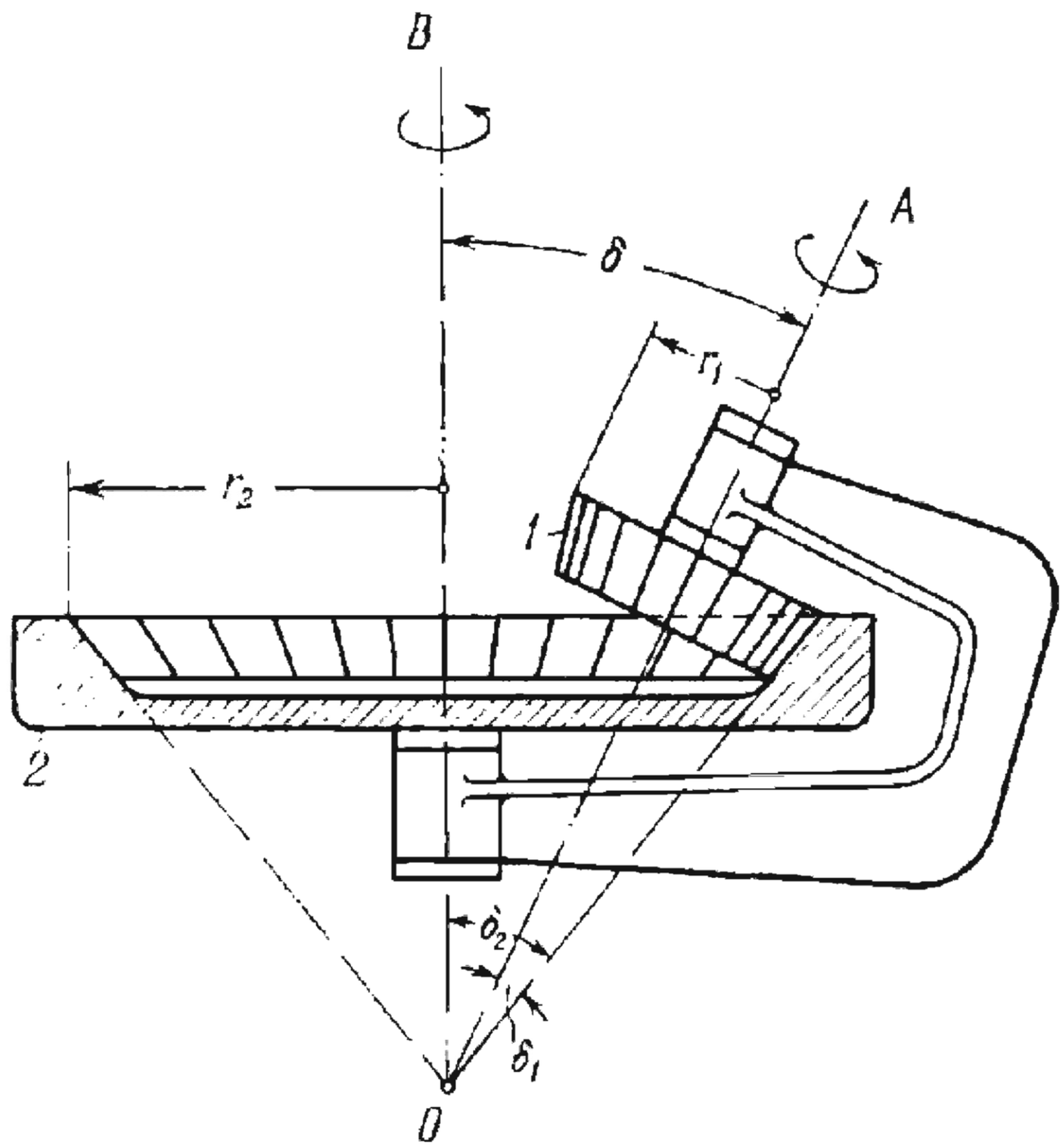

Bevel pinion *1* and internal bevel gear *2* rotate in the same direction about fixed axes *OA* and *OB* which intersect at point *O*. Taking the signs of the angular velocities ω_1 and ω_2 of gears *1* and *2* into account, the transmission ratio of the mechanism is

$$i_{12}=\frac{\omega_1}{\omega_2}=\frac{r_2}{r_1}=\frac{z_2}{z_1}=\frac{\sin\delta_2}{\sin\delta_1}=\frac{\cos\delta\tan\delta_1+\sin\delta}{\tan\delta_1}=$$

$$=\frac{\tan\delta_2}{\cos\delta\tan\delta_2-\sin\delta}$$

where r_1 and r_2 are the radii of contacting circles on the pitch cones of gears *1* and *2*, z_1 and z_2 are the numbers of teeth of gears *1* and *2*, δ_1 and δ_2 are the pitch cone angles of gears *1* and *2*, and δ is the centre angle (angle between axes *OA* and *OB*).

2333	THREE-LINK TOOTHED BEVEL GEARING WITH CIRCULAR PINION AND CROWN GEAR	SG 3L

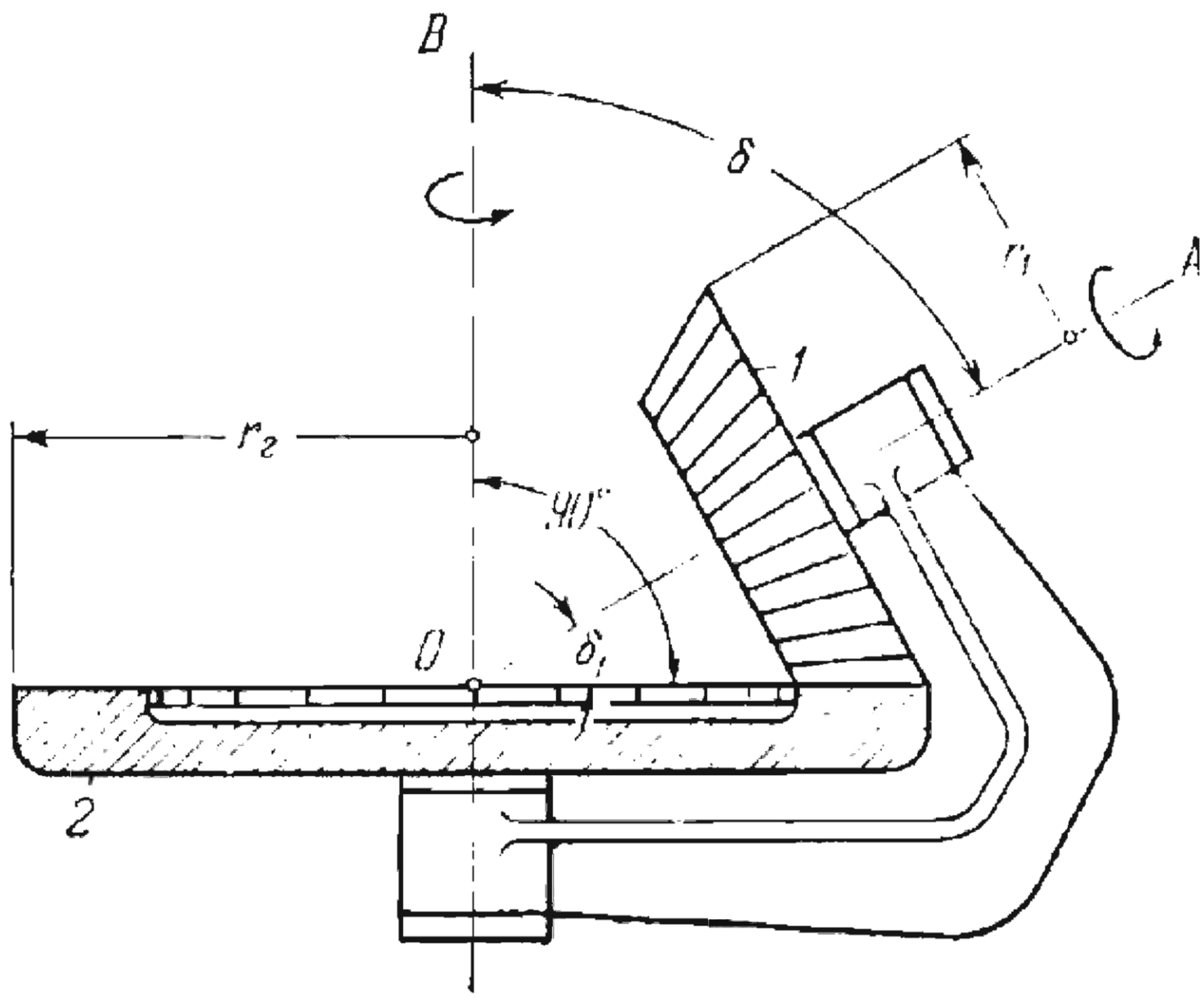

Bevel pinion *1* rotates about fixed axis *OA*. Crown gear (circular rack) *2* rotates about fixed axis *OB*. Axes *OA* and *OB* intersect at point *O*. The transmission ratio of the mechanism is

$$i_{12}=\frac{\omega_1}{\omega_2}=\frac{r_2}{r_1}=\frac{z_2}{z_1}=\frac{1}{\sin\delta_1}=\frac{1}{\cos\delta}$$

where r_1 and r_2 are the radii of contacting circles on the pitch cone of pinion *1* and on crown gear *2*, z_1 and z_2 are the numbers of teeth of gears *1* and *2*, δ_1 is the pitch cone angle of pinion *1* and δ is the centre angle (angle between axes *OA* and *OB*).

2334	THREE-LINK EXTERNAL CIRCULAR PLANETARY TOOTHED BEVEL GEARING	SG 3L

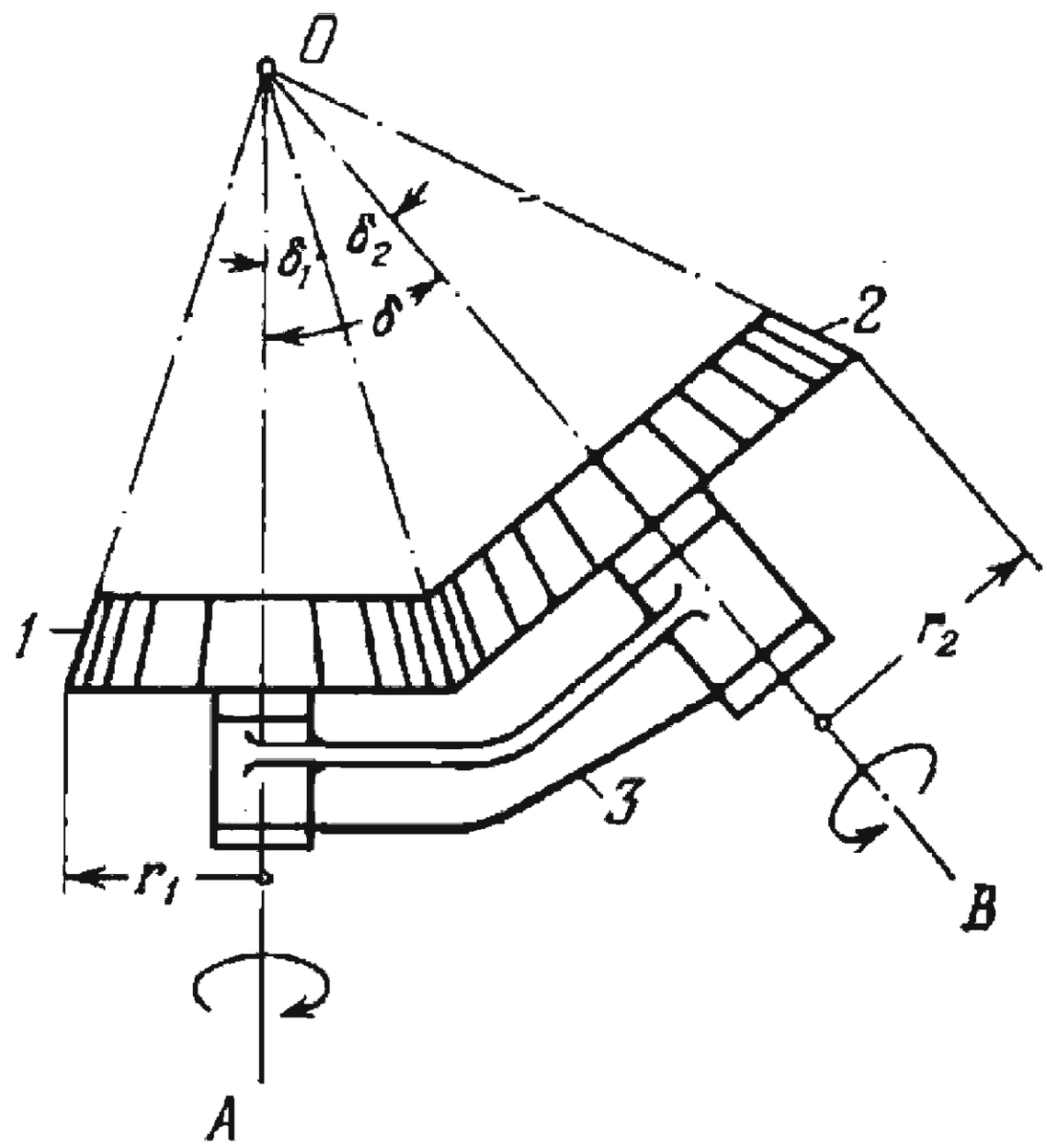

Sun bevel gear *1* is rigidly attached to the base. Planet bevel gear *2* rotates about axis *OB* of carrier *3* which, in turn, rotates about fixed axis *OA*. Axes *OA* and *OB* intersect at point *O*. Taking the sign of the angular velocities ω_2 and ω_3 of gear *2* and carrier *3* into account, the transmission ratio of the mechanism is

$$i_{23} = \frac{\omega_2}{\omega_3} = 1 + \frac{r_1}{r_2} = 1 + \frac{z_1}{z_2} = 1 + \frac{\sin \delta_1}{\sin \delta_2}$$

where r_1 and r_2 are the radii of contacting circles on the pitch cones of gears *1* and *2*, z_1 and z_2 are the numbers of teeth of gears *1* and *2*, δ_1 and δ_2 are the pitch cone angles of gears *1* and *2*, and δ is the centre angle (angle between axes *OA* and *OB*). If angle $\delta = \delta_1 + \delta_2 = 90°$ (mitre gears) then the transmission ratio equals

$$i_{23} = 1 + \cot \delta_2 = 1 + \tan \delta_1.$$

2335	THREE-LINK INTERNAL CIRCULAR PLANETARY TOOTHED BEVEL GEARING	SG 3L

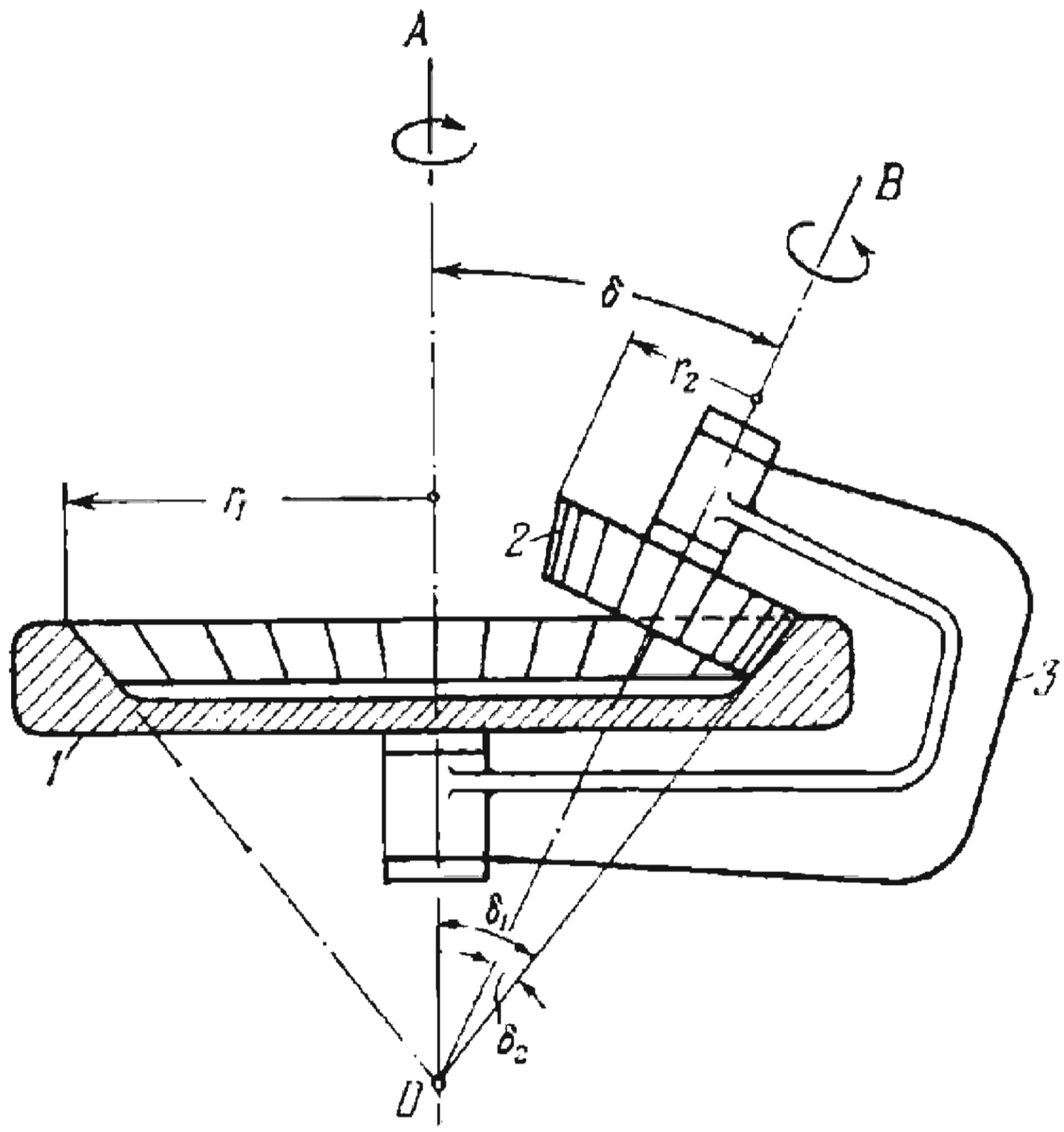

Sun internal bevel gear *1* is rigidly attached to the base. Planet bevel gear *2* rotates about axis *OB* of carrier *3* which, in turn, rotates about fixed axis *OA*. Axes *OA* and *OB* intersect at point *O*. Taking the signs of the angular velocities ω_2 and ω_3 of gear *2* and carrier *3* into account, the transmission ratio of the mechanism is

$$i_{23}=\frac{\omega_2}{\omega_3}=1-\frac{r_1}{r_2}=1-\frac{z_1}{z_2}=1-\frac{\sin\delta_1}{\sin\delta_2}$$

where r_1 and r_2 are the radii of contacting circles on the pitch cones of gears *1* and *2*, z_1 and z_2 are the numbers of teeth of gears *1* and *2*, δ_1 and δ_2 are the pitch cone angles of gears *1* and *2*, and δ is the centre angle (angle between axes *OA* and *OB*).

2336	THREE-LINK PLANETARY TOOTHED BEVEL GEARING WITH CIRCULAR PINION AND CROWN GEAR	SG 3L

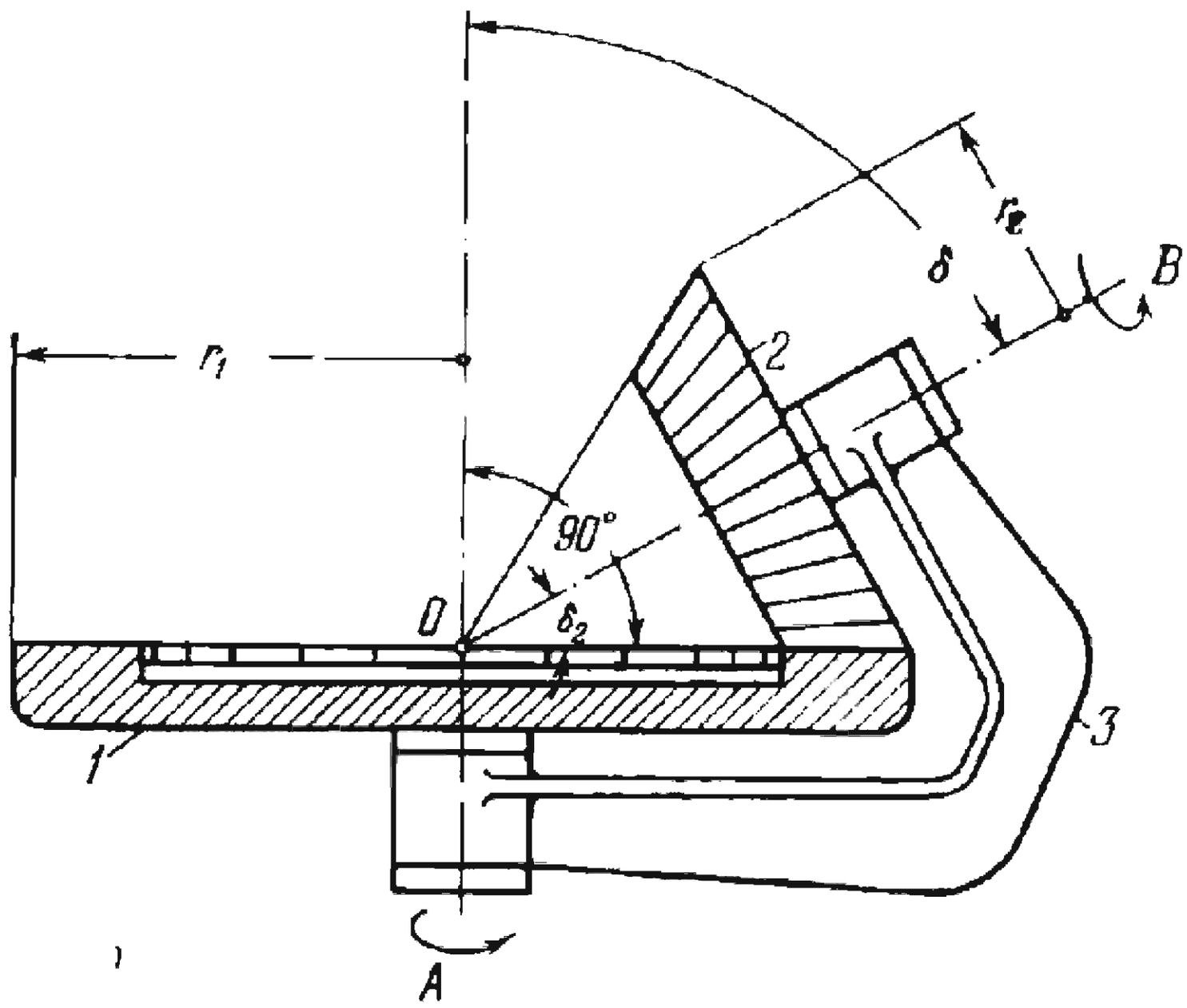

Sun crown gear (circular rack) *1* is rigidly attached to the base. Planet bevel pinion *2* rotates about axis *OB* of carrier *3* which, in turn, rotates about fixed axis *OA*. Axes *OA* and *OB* intersect at point *O*. Taking the sign of the angular velocities ω_2 and ω_3 of pinion *2* and carrier *3* into account, the transmission ratio of the mechanism is

$$i_{23}=\frac{\omega_2}{\omega_3}=1-\frac{r_1}{r_2}=1-\frac{z_1}{z_2}=1-\frac{1}{\sin\delta_2}=1-\frac{1}{\cos\delta}$$

where r_1 and r_2 are the radii of contacting circles on crown gear *1* and on the pitch cone of pinion *2*, z_1 and z_2 are the numbers of teeth of gears *1* and *2*, δ_2 is the pitch cone angle of pinion *2*, and δ is the centre angle (angle between axes *OA* and *OB*).

2337	THREE-LINK CIRCULAR TOOTHED SKEW BEVEL GEARING	SG 3L

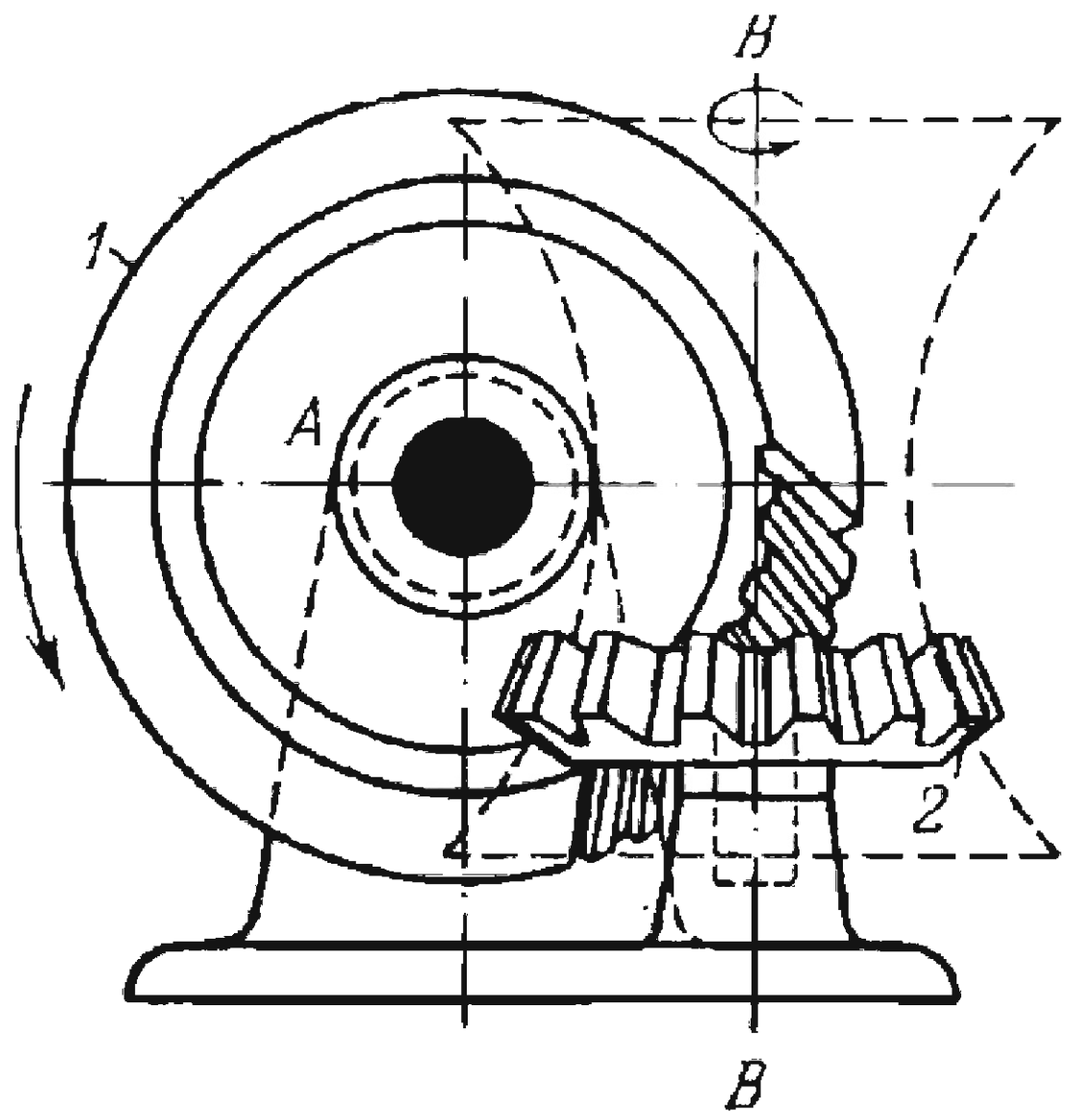

Gear *1* and pinion *2* rotate about fixed axes *A* and *B-B* which cross each other at the angle δ. The pitch surfaces of the gears are circular hyperboloids of one sheet with radii of their narrowest cross sections equal to r_1 and r_2. The teeth of gear *1* and pinion *2* are located on certain selected conjugate portions of the pitch hyperboloids. Taking the sign of the angular velocities ω_1 and ω_2 of gears *1* and *2* into account, the transmission ratio of the mechanism is

$$i_{12}=\frac{\omega_1}{\omega_2}=-\frac{r_2}{r_1}\frac{\cos\delta_2}{\cos\delta_1}$$

where δ_1 and δ_2 are the angles between axes *A* and *B-B* and the straight line of contact of the pitch hyperboloids. The sum of radii r_1 and r_2 is

$$r_1+r_2=a$$

where *a* is the distance between axes *A* and *B-B*. If angle $\delta = 90°$, then the transmission ratio is

$$i_{12}=-\frac{r_2}{r_1}\tan\delta_1.$$

If the portions of the pitch hyperboloids at the narrowest cross sections are approximated by circular cylinders, spiral (crossed helical) gearing is obtained; if the portions of the pitch hyperboloids near their end faces are approximated by cones, hypoid gearing is obtained.

2338	THREE-LINK SPATIAL TOOTHED GEARING WITH CIRCULAR GEARS	SG 3L

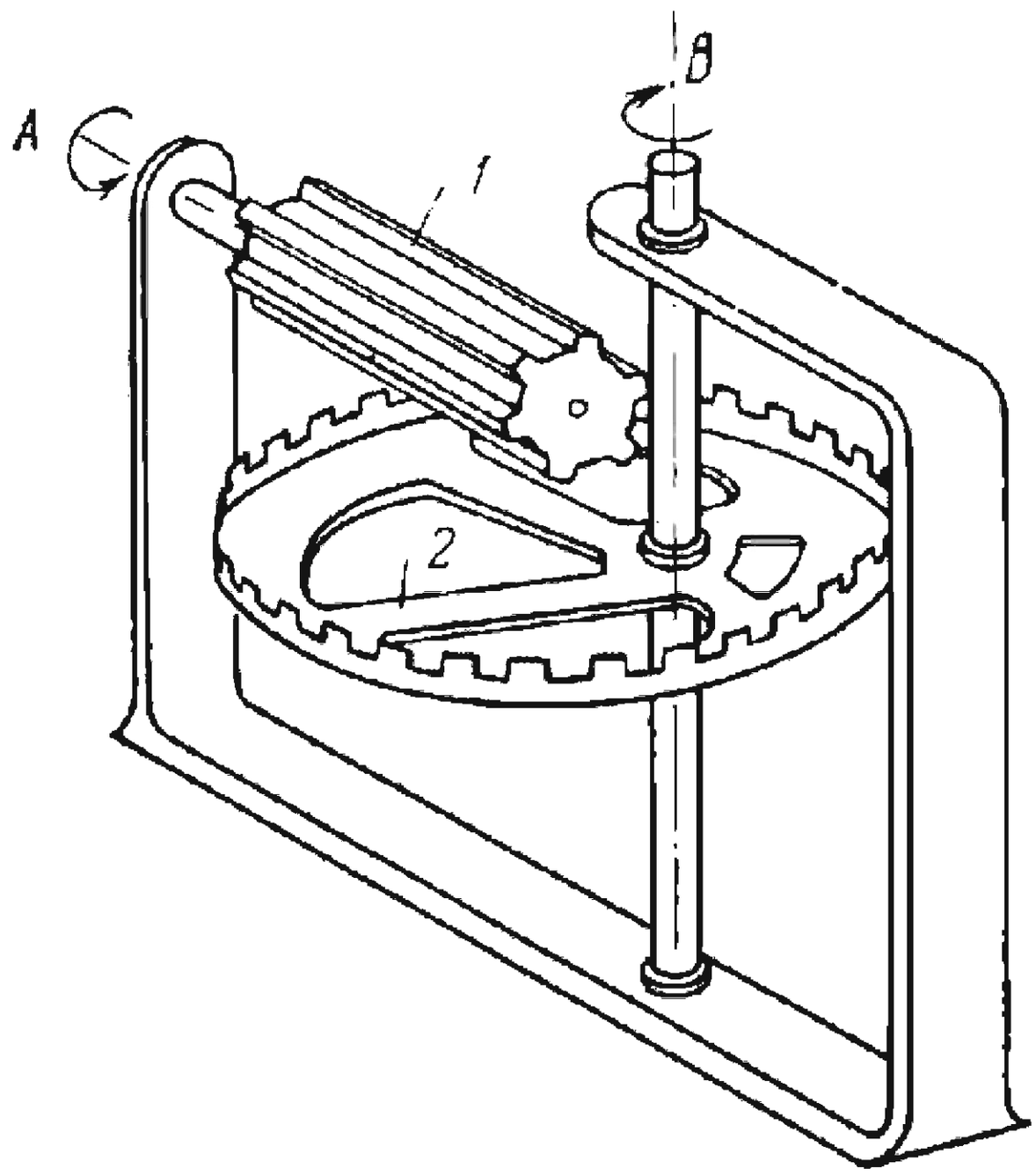

Circular wide-face pinion *1* rotates about fixed axis *A* and meshes with circular face gear *2* which rotates about fixed axis *B*. Axes *A* and *B* intersect at right angles. Gear *2* is mounted eccentrically with respect to its geometric axis. Taking the sign of the angular velocities ω_1 and ω_2 of gears *1* and *2* into account, the average transmission ratio of the mechanism is

$$i_{12}=\frac{\omega_1}{\omega_2}=-\frac{r_2}{r_1}$$

where r_1 and r_2 are the pitch radii of gears *1* and *2*. The transmission ratio varies within the limits from

$$i_{\min}=\frac{r_2-e}{r_1} \quad \text{to} \quad i_{\max}=\frac{r_2+e}{r_1}$$

where e is the eccentricity of gear *2*.

2339	THREE-LINK TOOTHED GEARING WITH A HELICAL PINION AND A SCROLL GEAR	SG 3L

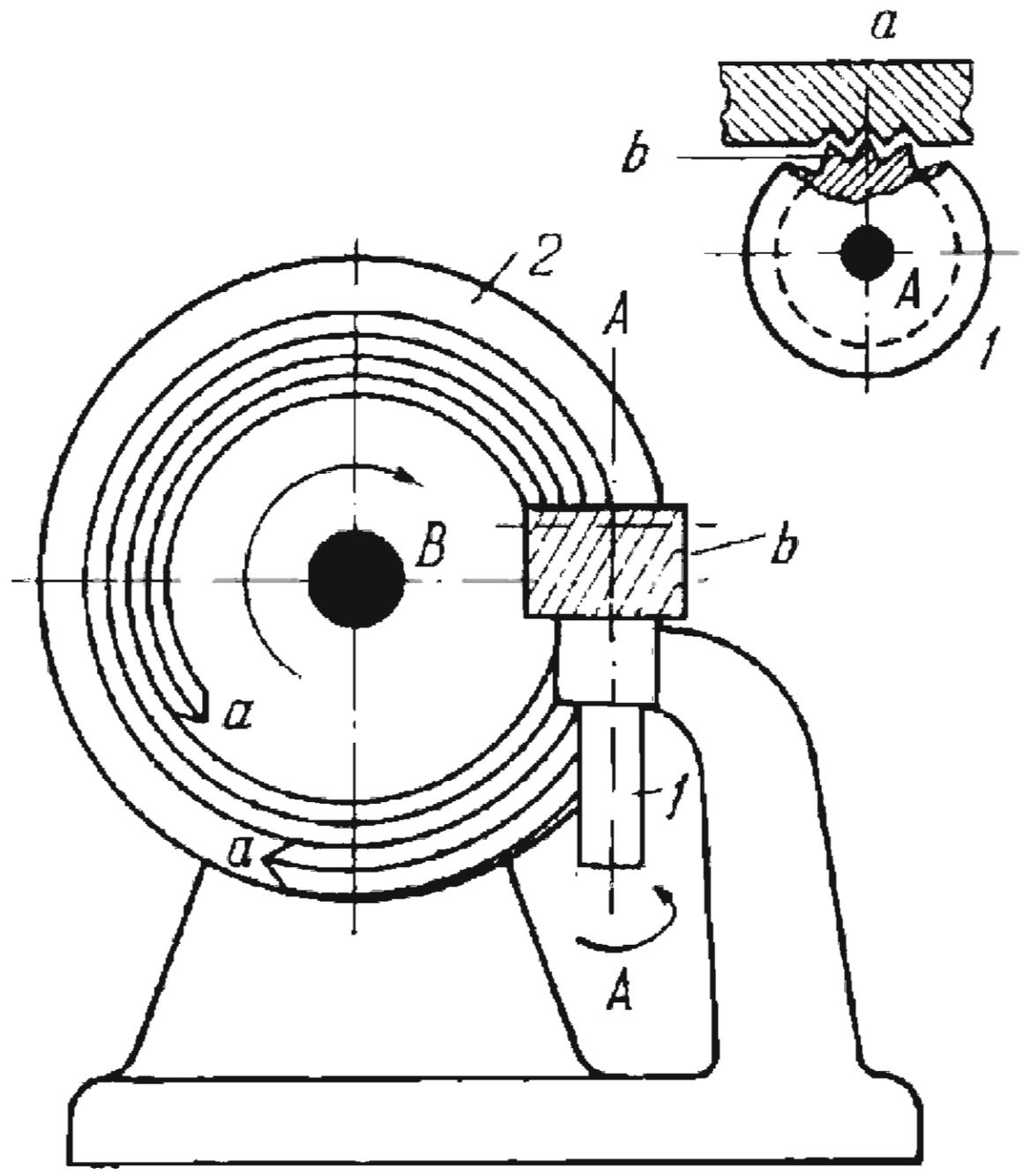

Helical pinion *1* and scroll gear (spiral rack) *2* rotate about fixed axes *A* and *B*. Pinion *1* has helical teeth *b* and scroll gear *2* has a spiral tooth space *a*. Continuous rotation of driving gear *2* is transformed into continuous rotation of driven pinion *1*.

2340	THREE-LINK SPIRAL-ENGAGEMENT GEARING WITH HELICAL LINK MOTION	SG 3L

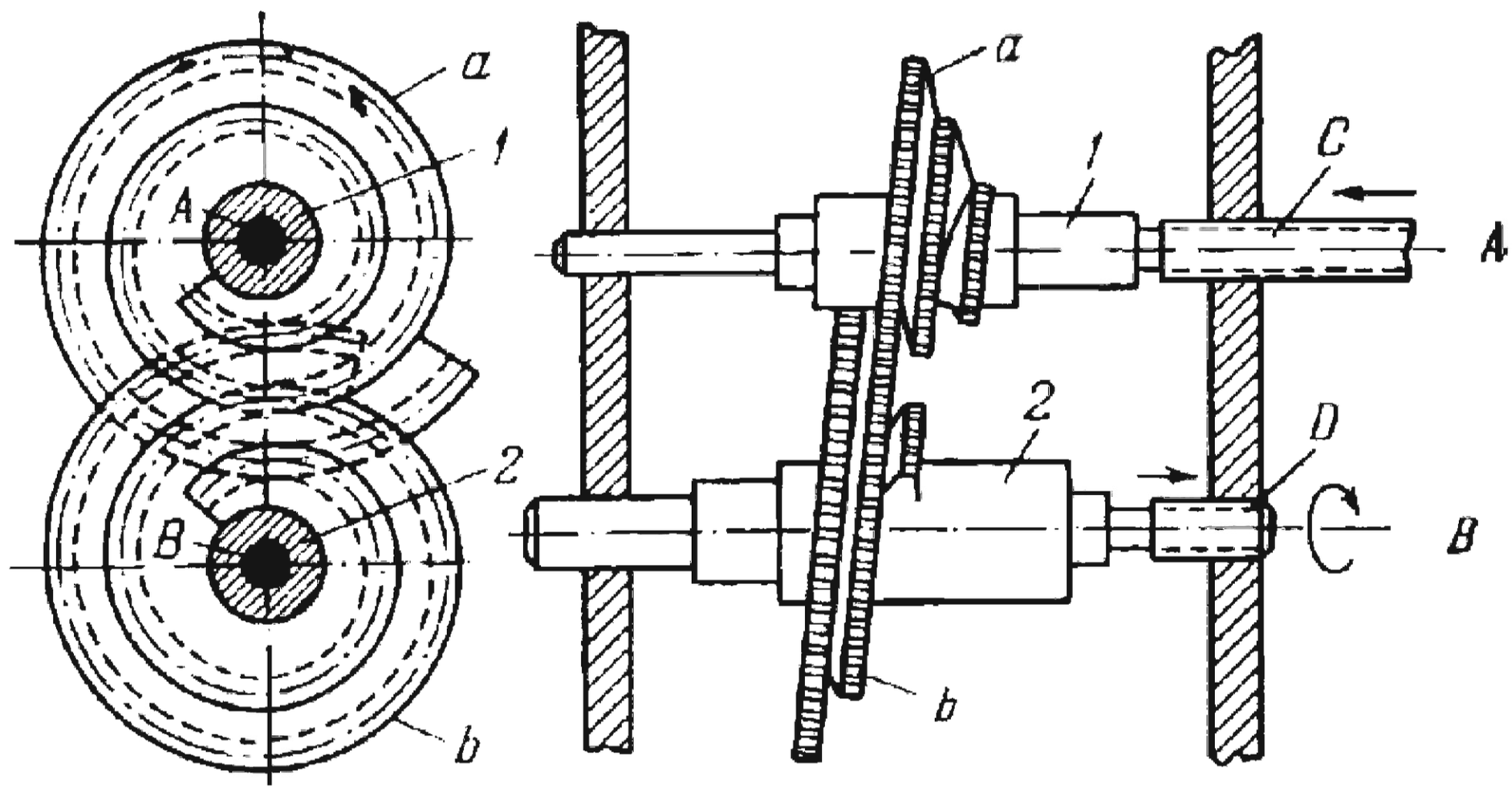

Link *1* rotates about fixed axis *A* and is connected by screw pair *C* to the base. Rigidly attached to link *1* is spiral-engagement gear *a*, designed with its toothed rim along a conical helix (three-dimensional spiral). Gear *a* meshes with spiral-engagement gear *b* which is rigidly attached to link *2*. Link *2* rotates about fixed axis *B* and is connected by screw pair *D* to the base. When link *1* rotates at uniform velocity, link *2* rotates with nonuniform velocity.

2341	TOOTHED MULTIPLE CROWN-GEAR AND SHIFTING PINION SPEED-CHANGING MECHANISM	SG 3L

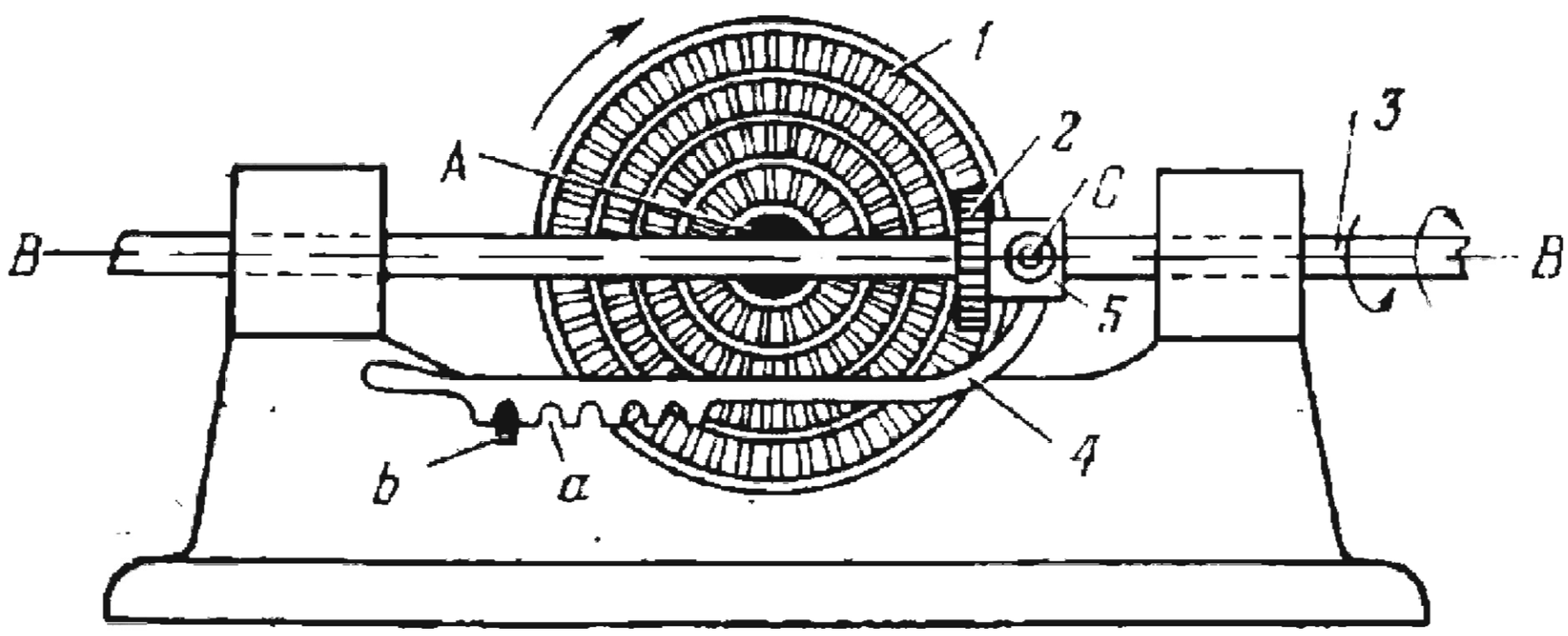

Crown gear *1* and pinion *2* rotate about fixed axes *A* and *B-B*. Crown gear *1* has four concentric rows of teeth. Pinion *2* is rigidly attached to slider *5* which moves along shaft *3*. By shifting slider *5* along shaft *3* pinion *2* can be brought into engagement with one of the rows of teeth on crown gear *1*. For a single angular velocity of crown gear *1*, pinion *2* can have either of four angular velocities. Shaft *3* rotates in the same direction when pinion *2* engages rows to the right of point *A*; its direction is reversed when pinion *2* engages rows to the left of point *A*. Slider *5* is shifted by lever *4* to which it is connected by turning pair *C*. Slider *5* is indexed in each of its positions in which pinion *2* engages a row on crown gear *1* by means of slots *a* in lever *4* and tooth *b* mounted on the base.

2342	THREE-LINK TOOTHED SPIRAL-FACE BEVEL GEARING	SG 3L

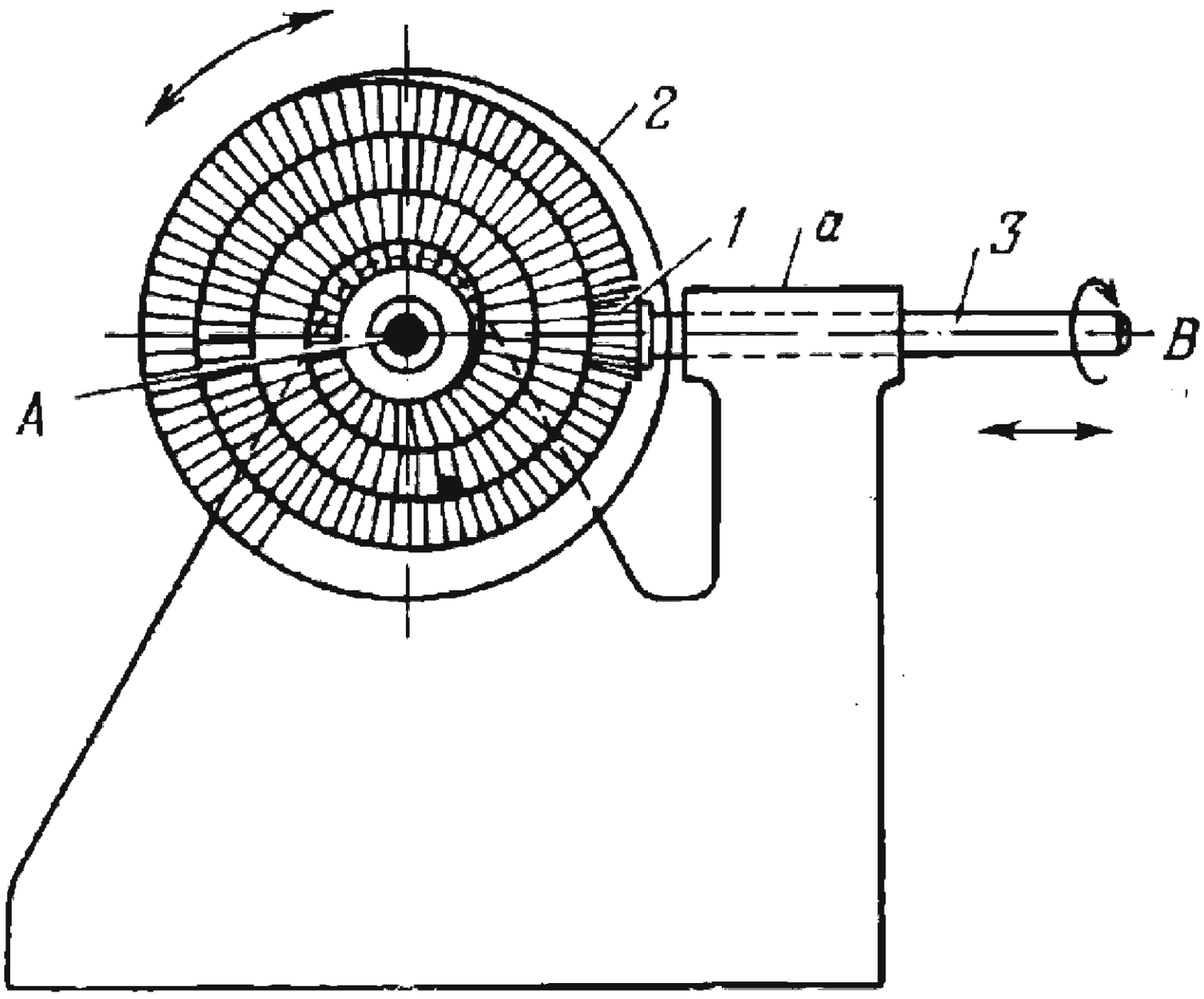

Driving gear *2* rotates about fixed axis *A* and has bevel gear teeth arranged along a logarithmic spiral. Driven bevel pinion *1* is mounted rigidly on shaft *3* and rotates about its fixed geometric axis *B*. Shaft *3* slides along axis *B* in guide *a*. When gear *2* rotates alternately clockwise and counterclockwise at uniform velocity, shaft *3* has reciprocating helical motion at constant velocity along axis *B*.

2343	THREE-LINK TOOTHED SPIRAL-FACE BEVEL GEARING	SG 3L

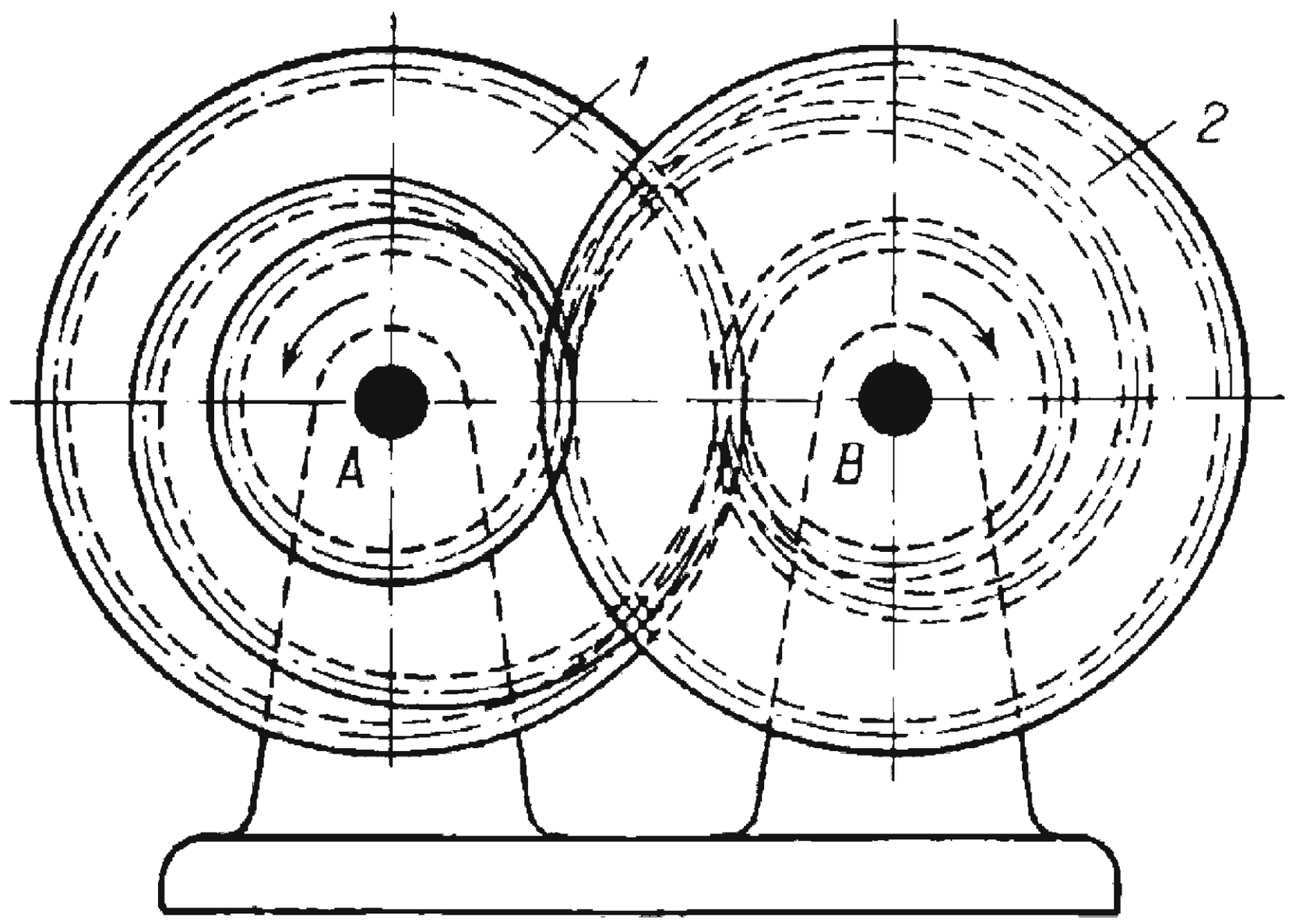

Located on the surfaces of truncated cones *1* and *2*, rotating about fixed axes *A* and *B*, are series of teeth whose pitch curves project as identical logarithmic spirals on the plane of the drawing. When cone *1* is rotated at constant velocity counterclockwise, the angular velocity of cone *2* decreases gradually.

2344	THREE-LINK TOOTHED GEARING WITH SPHERICAL ENGAGEMENT	SG 3L

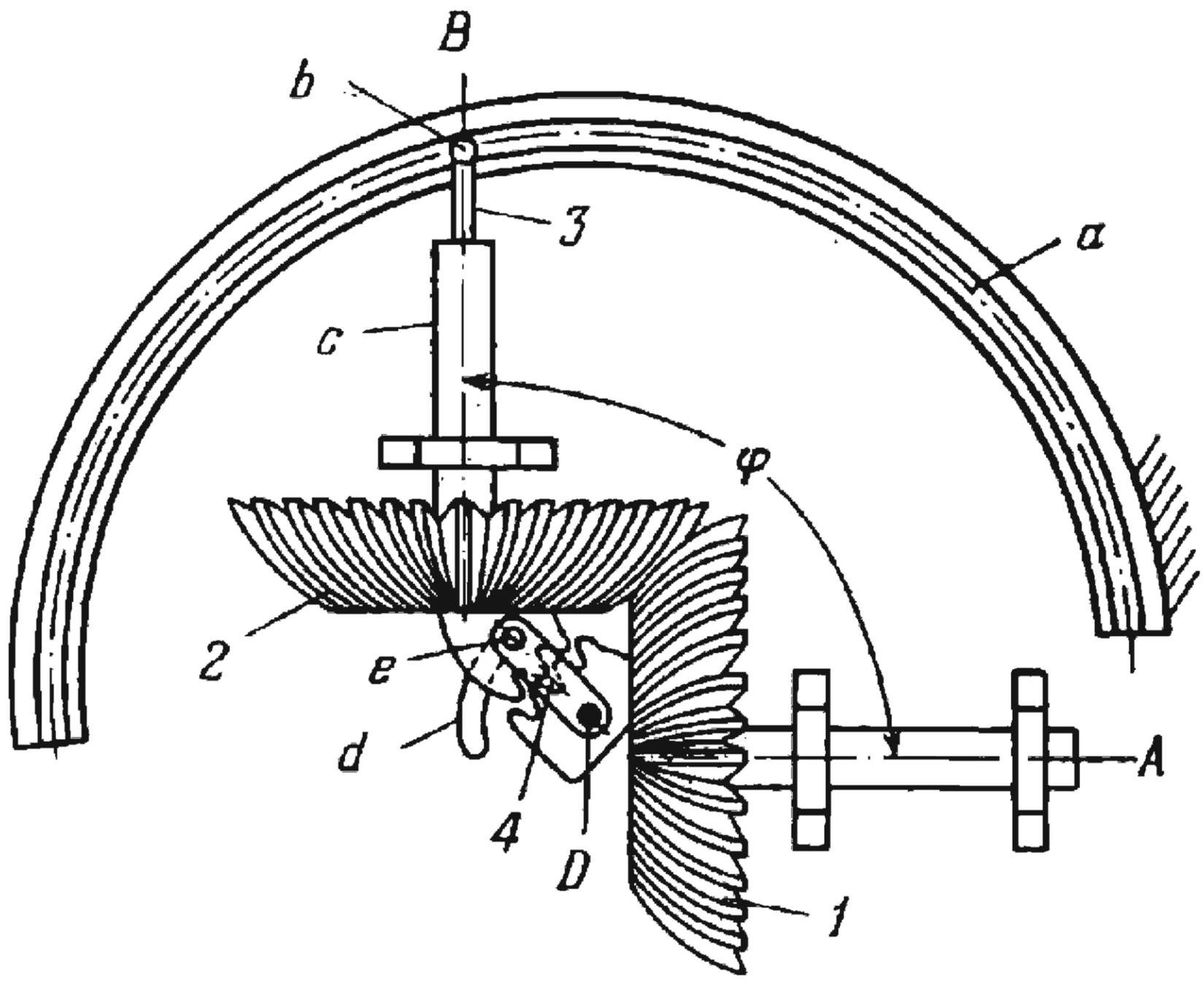

Gear *1* has its teeth located on a spherical surface and rotates about fixed axis *A*. Gear *1* meshes with an identical gear *2* which rotates about axis *B*. Axes *A* and *B* intersect at an angle φ which can be varied by changing the position of pin *b* of link *3* along fixed circular guide *a*. Link *3* slides in sleeve *c* of gear *2*. Proper tooth engagement of the gears and the required position of gear *2* with respect to gear *1* are adjusted by means of lever *4* which turns about fixed axis *D*. Pin *e* of lever *4* slides along fixed circular guide *d*. Angle φ can be changed even when the gearing is in operation.

2345	FOUR-LINK TOOTHED GEARING FOR DRIVING TWO NONPARALLEL RACKS	SG 4L

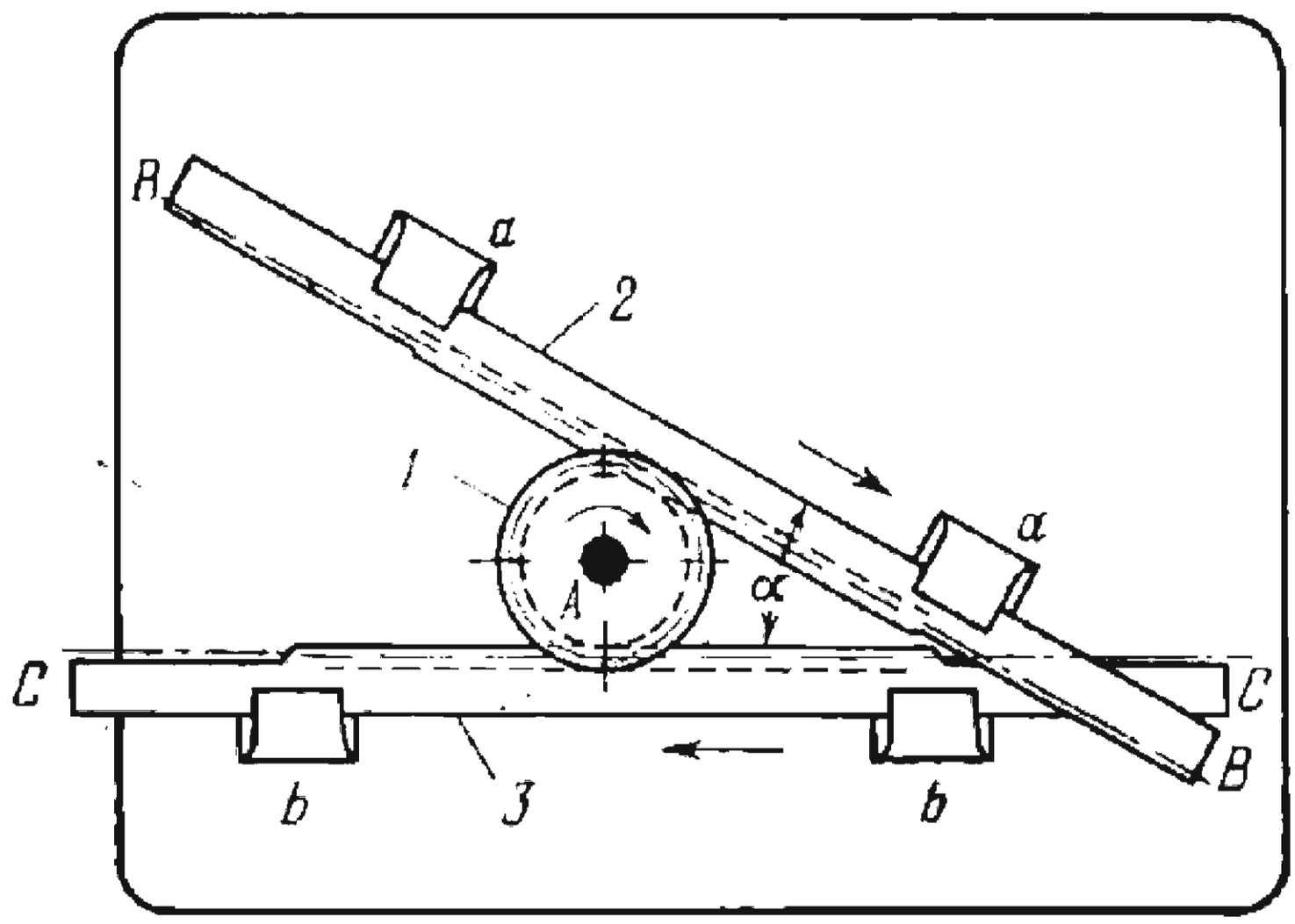

Pinion *1* rotates about fixed axis *A* and meshes with two gear racks, *2* and *3*, which slide along fixed guides *a-a* and *b-b*. Axes *B-B* and *C-C* of the racks form constant angle α. When pinion *1* is rotated, racks *2* and *3* have translatory motion at equal velocities and, consequently, have equal displacements along axes *B-B* and *C-C*.

2346	FOUR-LINK DUPLEX PINION-AND-RACK GEARING	SG 4L

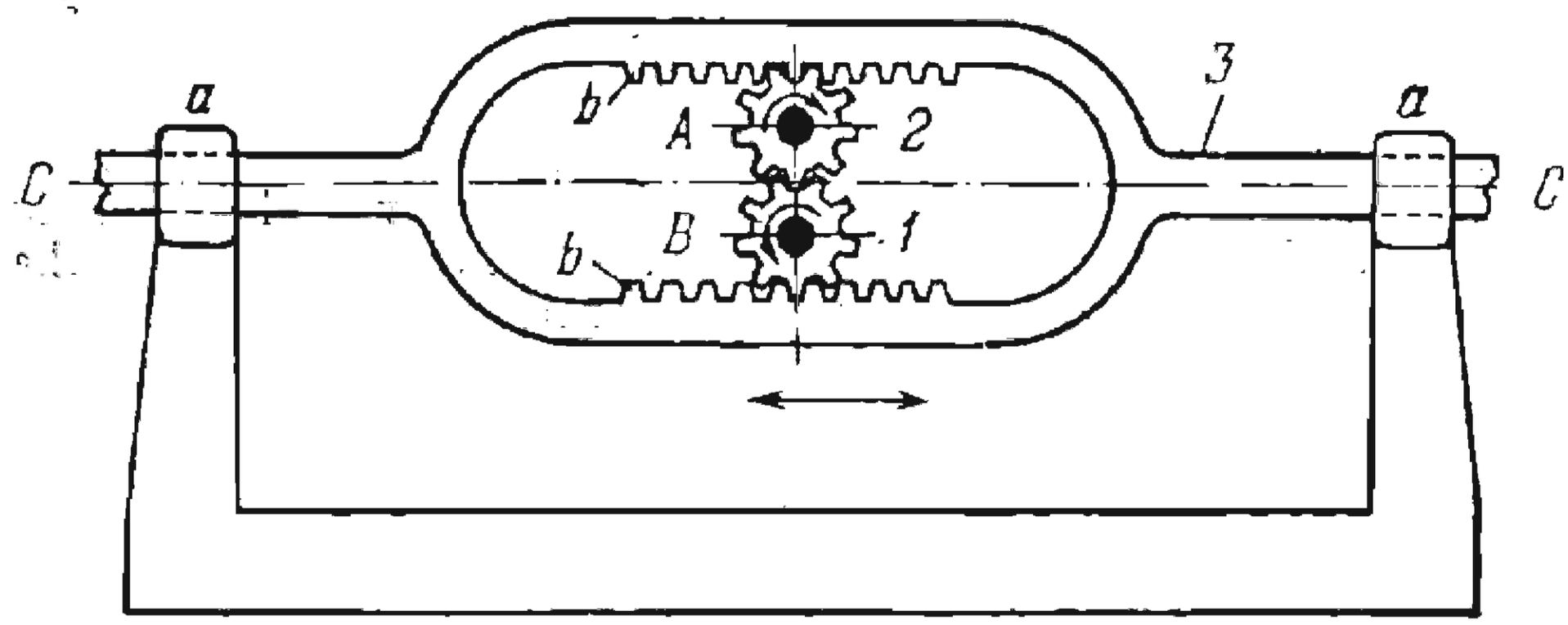

Pinions *1* and *2* rotate about fixed axes *B* and *A*. Link *3* slides along axis *C-C* in guides *a-a*. Pinions *1* and *2* have the same number of teeth and mesh with each other and with the upper and lower gear racks *b* of link *3*. When pinion *1* rotates counterclockwise, link *3* travels to the right; when pinion *1* is reversed, link *3* travels to the left.

2347	FOUR-LINK ELLIPTICAL GEARING WITH THREE GEARS	SG 4L

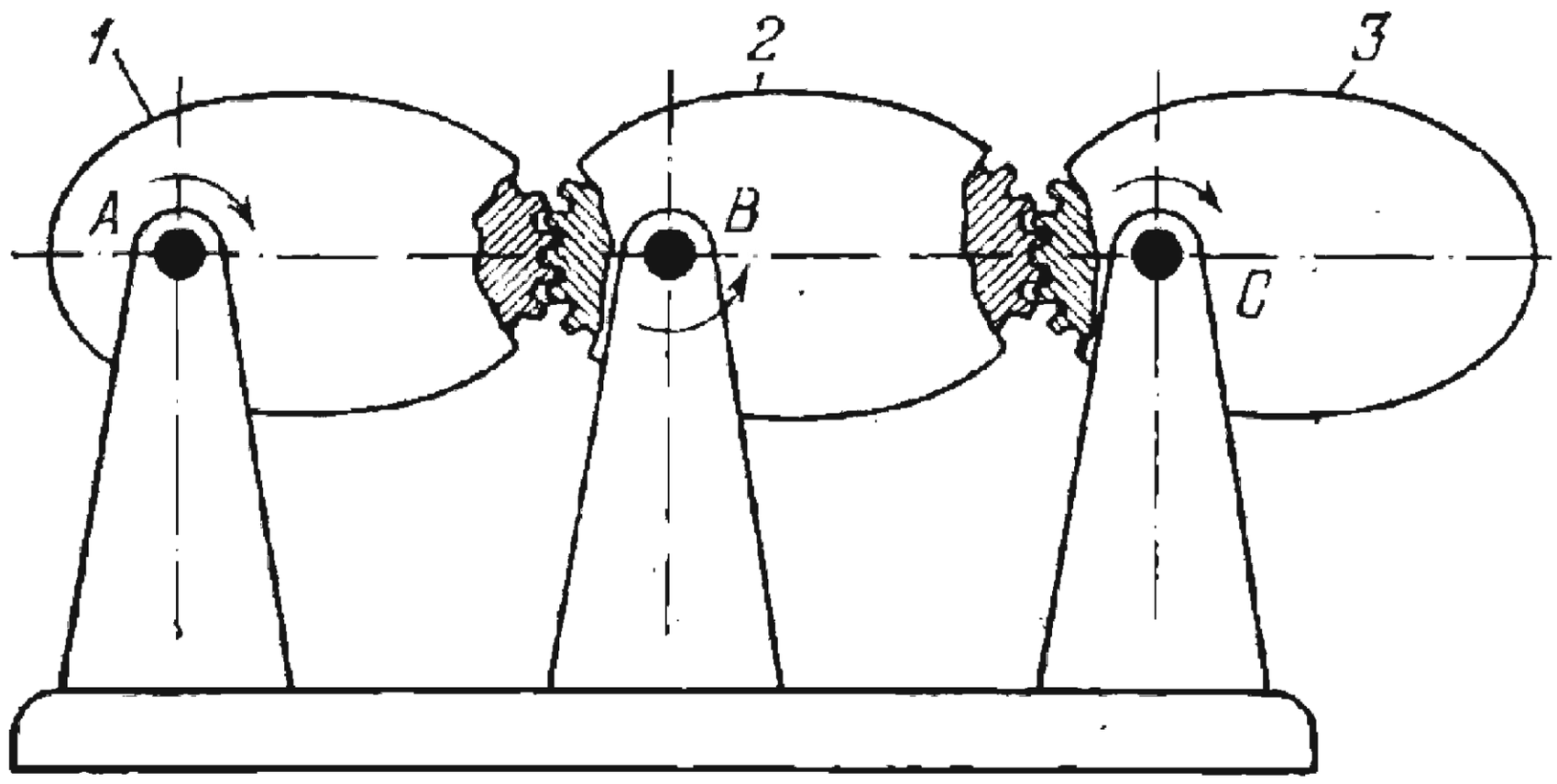

Three identical elliptical gears *1*, *2* and *3* rotate about fixed axes *A*, *B* and *C*. The transmission ratio between gears *1* and *2* is

$$i_{12}=\frac{1+2e\cos\varphi_1+e^2}{1-e^2}$$

and that between gears *2* and *3* is

$$i_{23}=\frac{1+2e\cos\varphi_2+e^2}{1-e^2}$$

where $e=\frac{c}{\overline{AB}}=\frac{c}{\overline{BC}}$ is the eccentricity of the ellipses, c is the distance between the foci of the ellipses, and φ_1, φ_2 and φ_3 are the angles of rotation of gears *1*, *2* and *3* and are related by the conditions

$$\varphi_2=\arcsin\frac{1-e^2}{1+2e\cos\varphi_1+e^2}\sin\varphi_1$$

and

$$\varphi_3=\arcsin\frac{1-e^2}{1+2e\cos\varphi_2+e^2}\sin\varphi_2.$$

Gears *1* and *3* rotate in the same direction.

2348	FOUR-LINK GEAR-LEVER TOOTHED RACK MECHANISM WITH TWO DRIVEN SEGMENT GEARS	SG 4L

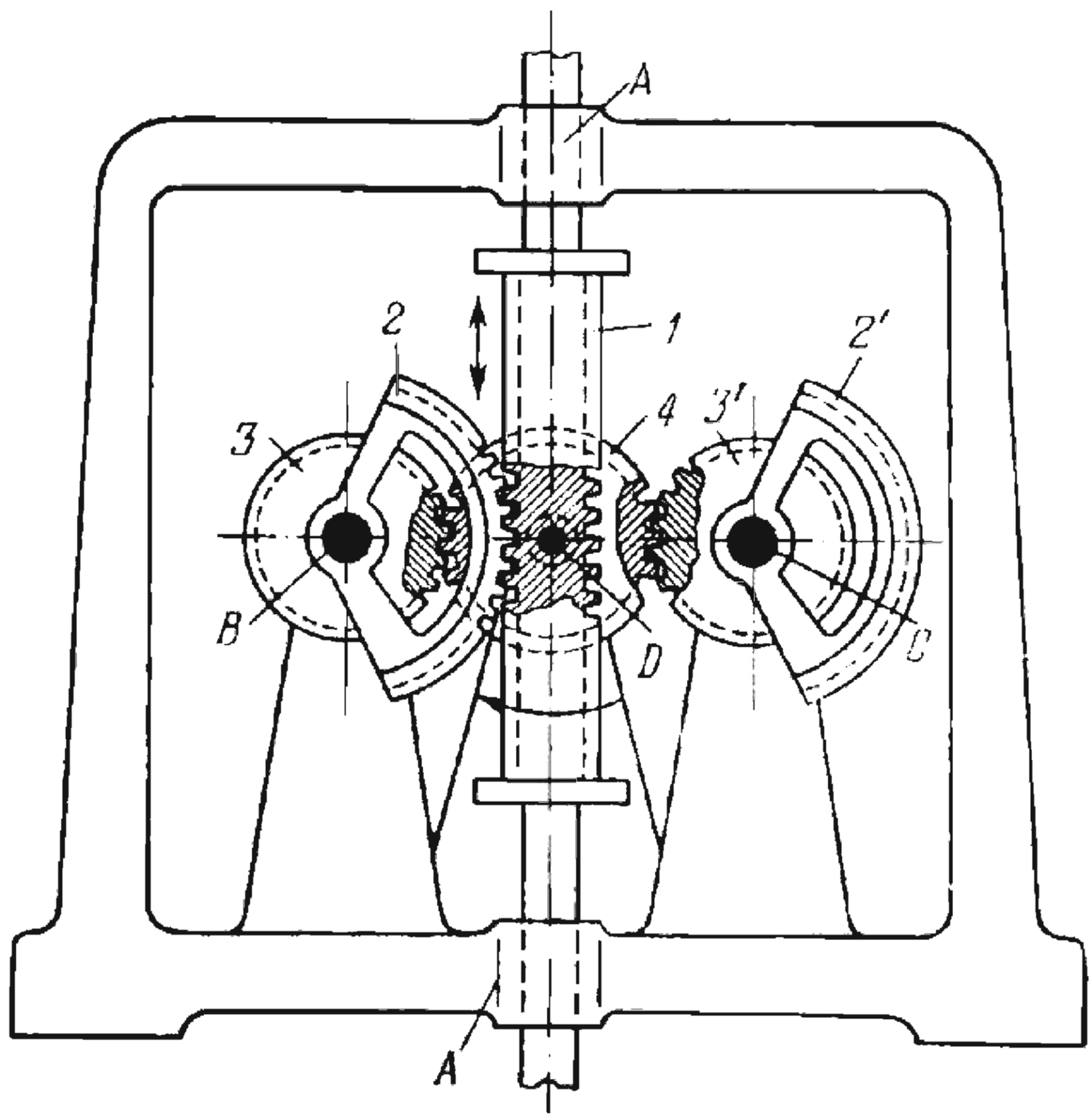

Gear rack *1* reciprocates in fixed guides *A-A*. Lever-type segment gears *2* and *2'* rotate about fixed axes *B* and *C*. Rigidly attached to segment gears *2* and *2'* are identical toothed gears *3* and *3'* which mesh with toothed gear *4*. Gear *4* rotates about fixed axis *D*.

2349	FOUR-LINK SCREW AND GEAR MECHANISM FOR TELESCOPIC GEARING	SG 4L

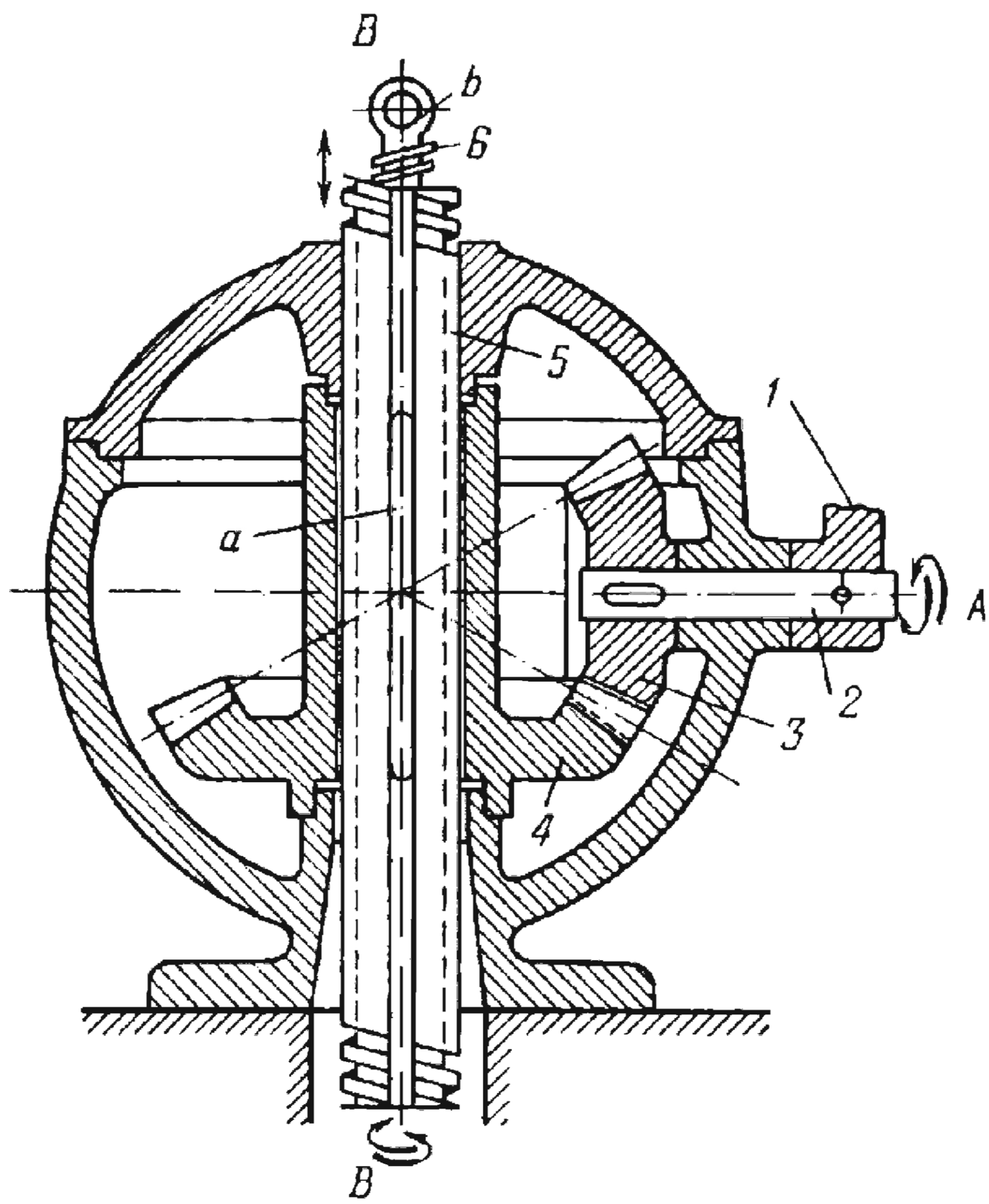

Bevel gears *3* and *4* rotate about fixed axes *A* and *B*. Rotation of lever *1* is transmitted through shaft *2*, and bevel gears *3* and *4* to screw *5* which has helical motion, being connected by a screw pair to the housing (base). Mounted in gear *4* is sliding key *a*. Screw *6* is connected by a screw pair to screw *5*; it has thread of the opposite hand and is held against rotation by a link (not shown) attached to eye *b*. This link advances together with screw *6*.

2350	FOUR-LINK TOOTHED INTERMITTENT GEARING	SG 4L

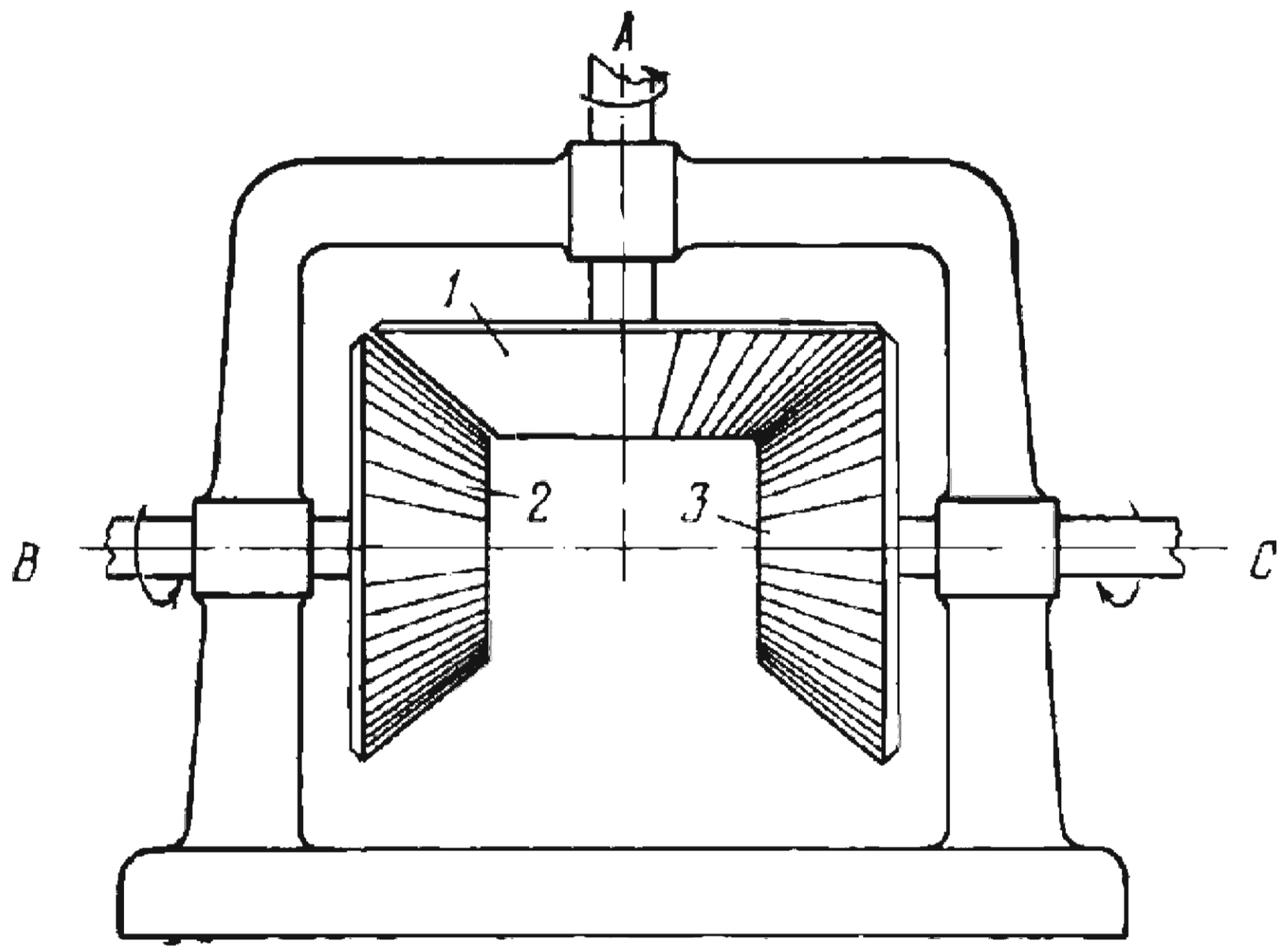

Driving bevel segment gear *1* rotates about fixed axis *A* and has teeth located on one half of its pitch cone. Gear *1* drives bevel gears *2* and *3* intermittently, with dwells, in opposite directions about fixed axes *B* and *C*.

2351	FOUR-LINK SCREW AND GEAR PLANETARY MECHANISM	SG 4L

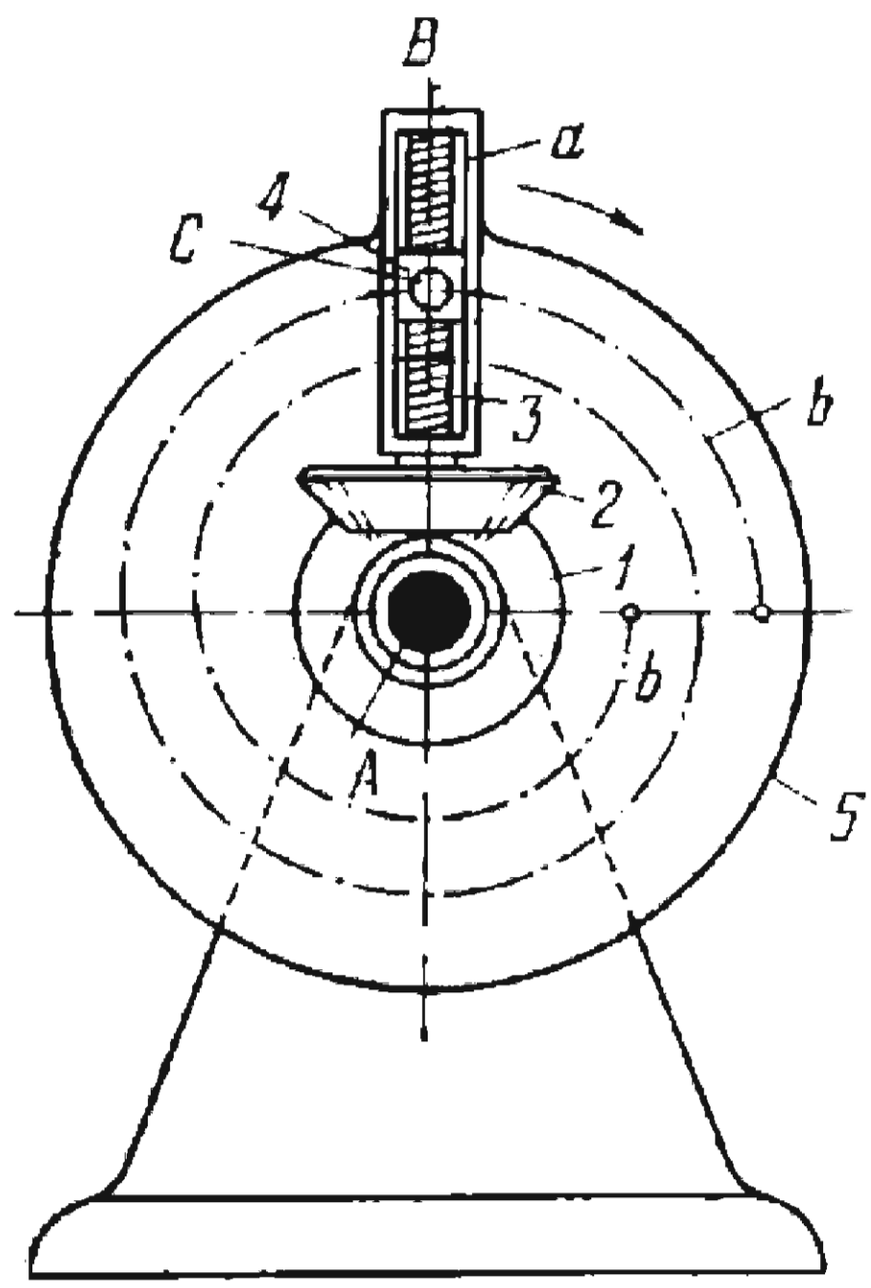

Movable bevel gear *2* rolls around fixed bevel gear *1*. Gear *2* rotates about axis *B* and, together with link *5*, rotates about fixed axis *A*. Connected rigidly to gear *2* is screw *3* which is connected by a screw pair to slider *4*. Slider *4* moves along guide *a* of link *5*. When link *5* rotates about axis *A*, point *C* of link *4* describes portion *b* of an Archimedian spiral.

2352	FOUR-LINK SCREW AND GEAR MECHANISM	SG 4L

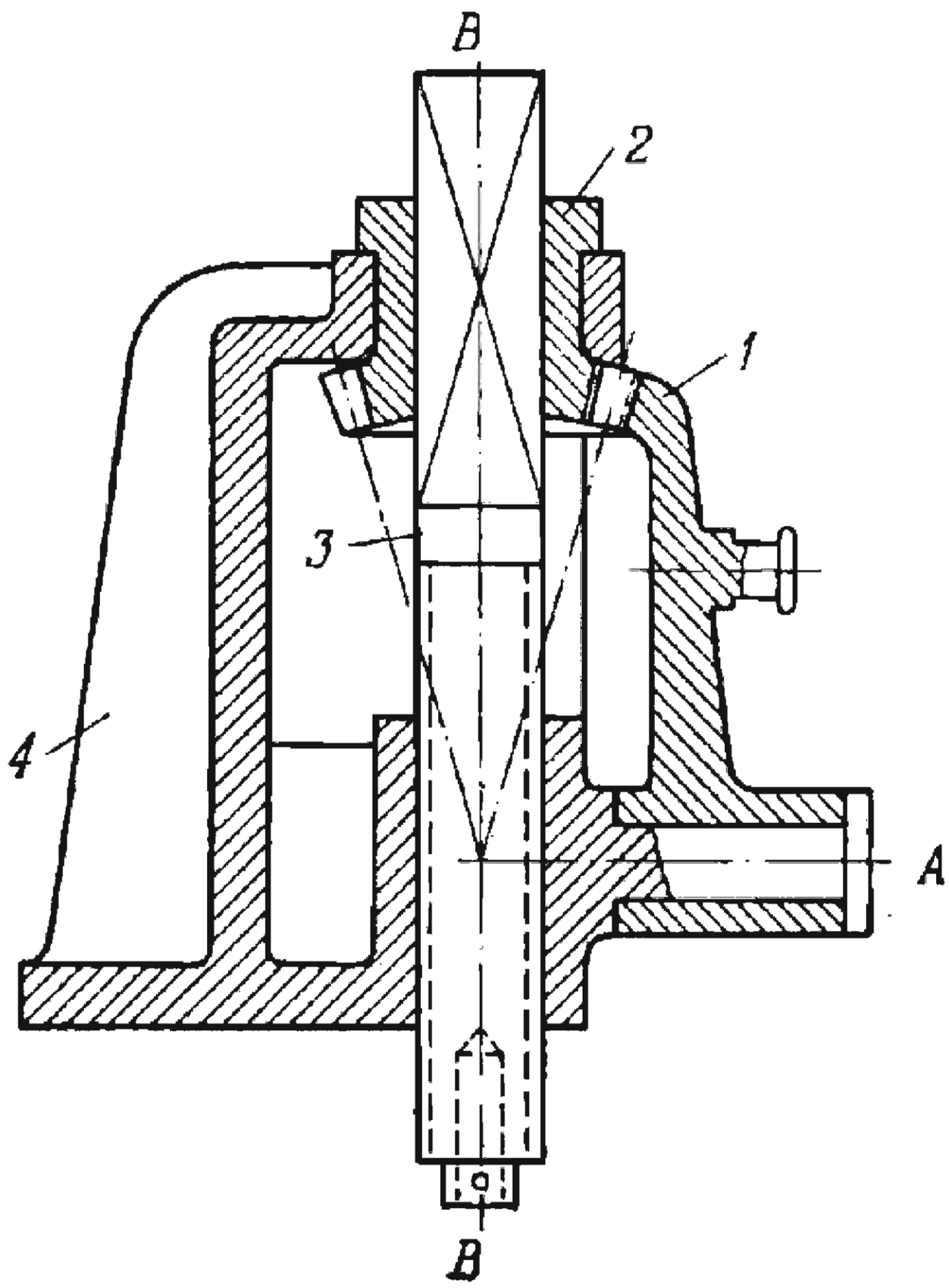

Bevel segment gear *1* turns about fixed axis *A* and meshes with bevel gear *2* which rotates about fixed axis *B-B*. Gear *2* is connected by a sliding pair to link *3*. Link *3* has helical motion along and about axis *B-B*, being connected by a screw pair to base *4*. When segment gear *1* oscillates about axis *A*, gear *2* rotates alternately in each direction and link *3* reciprocates with a helical motion with respect to base *4*.

2353	THREE-LINK TOOTHED GEARING WITH DWELLS OF THE DRIVEN GEAR	SG D

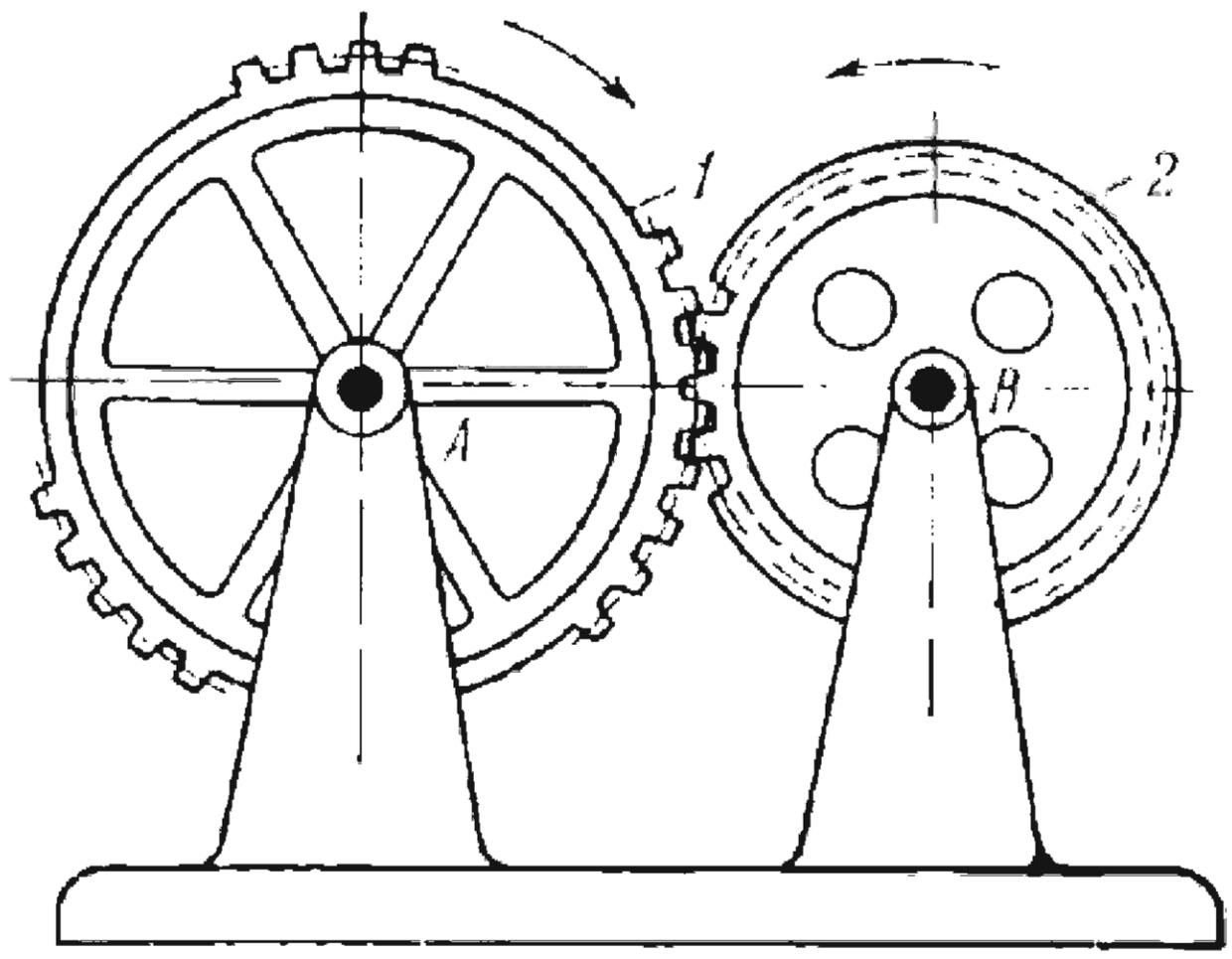

Gears *1* and *2* rotate about fixed axes *A* and *B*. Gear *1* has groups of teeth located at various portions of its pitch circle. When gear *1* rotates, gear *2* has various rotation and dwell periods. The lengths of these periods depend upon the numbers of teeth in each group on the rim of gear *1*. Unintentional motion of gear *2* and impacts at the instants of engagement of the teeth of the gears are avoided by providing the mechanism with supplementary conjugate cam surfaces (not shown) having profiles with special curves.

2354	THREE-LINK TOOTHED GEARING WITH INTERMITTENT RACK MOTION	SG D

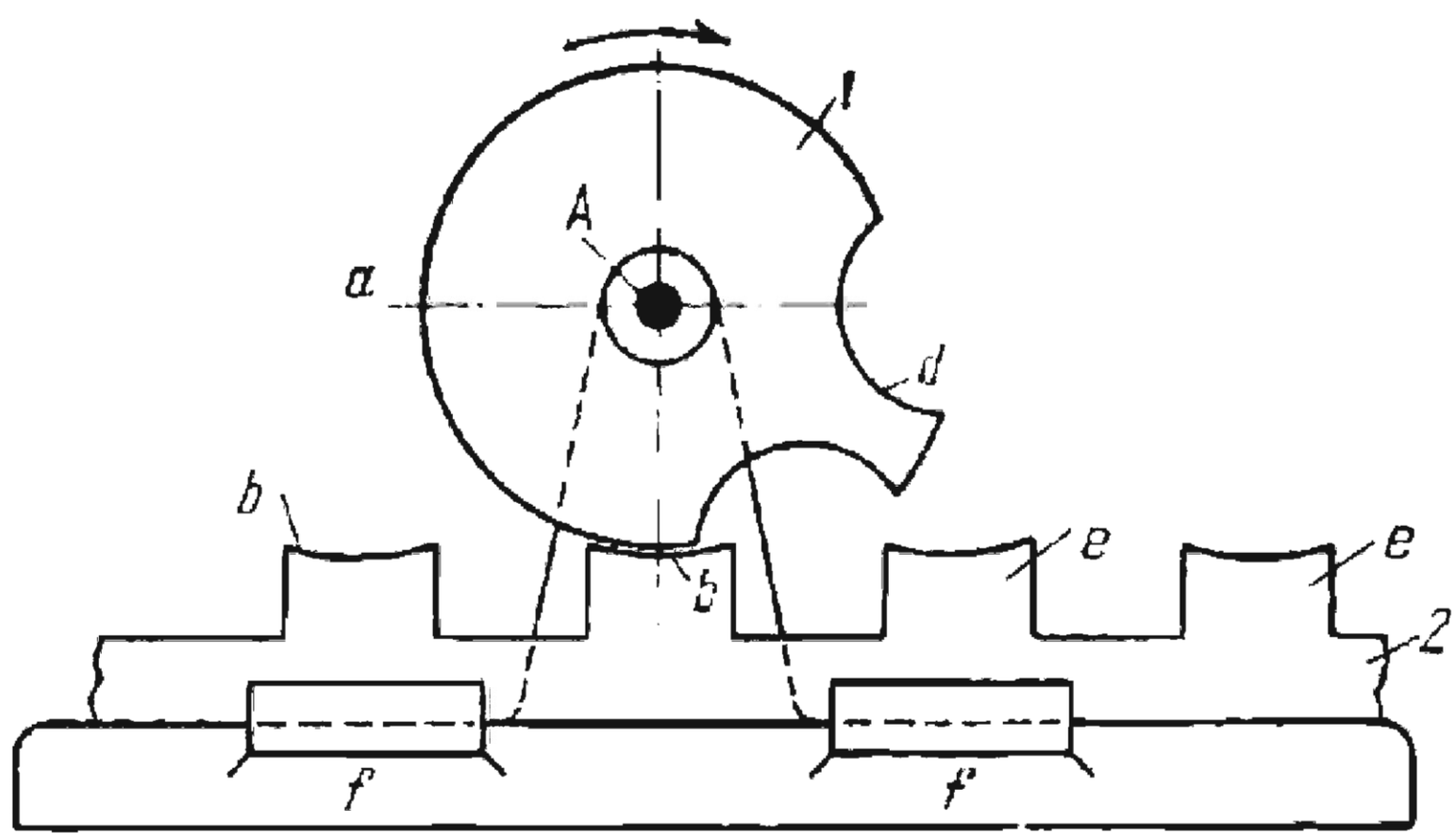

Single-tooth driving wheel *1* rotates about fixed axis *A*. Rack *2* slides along fixed guides *f-f*. When wheel *1* rotates, its tooth *d* consecutively engages teeth *e* of rack *2*, imparting intermittent sliding motion to the rack. During dwells of rack *2*, concentric locking surface *a* of wheel *1* engages a concave surface *b* of rack *2*, locking the latter against unintentional translatory motion.

2355	THREE-LINK TOOTHED GEARING WITH STEPWISE RACK MOTION	SG D

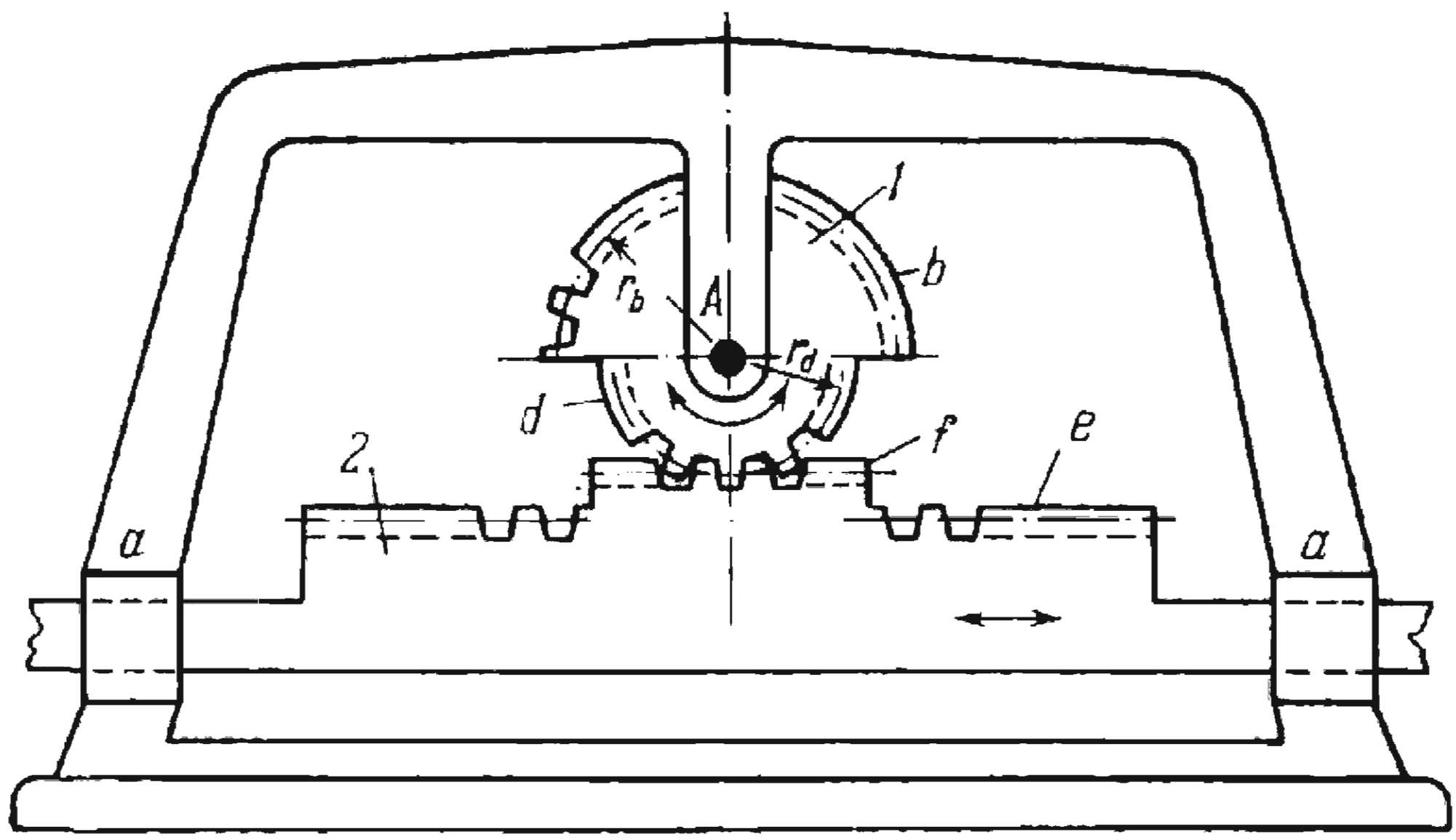

Gear *1* rotates about fixed axis *A*. Rack *2* slides along fixed guides *a-a*. Gear *1* is composed of two gear segments, *b* and *d*, having central angles of 180° each. Rack *2* consists of two toothed portions, *e* and *f*, which mesh with gear segments *b* and *d*. When gear *1* rotates at uniform velocity, rack *2* travels with stepwise velocity which changes from $v_2' = \omega_1 r_b$ to $v_2'' = \omega_1 r_d$, where ω_1 is the angular velocity of gear *1*, and r_b and r_d are the pitch radii of gear segments *b* and *d*.

2356	FOUR-LINK TOOTHED DWELL MECHANISM WITH A CIRCULAR LOCKING FEATURE	SG D

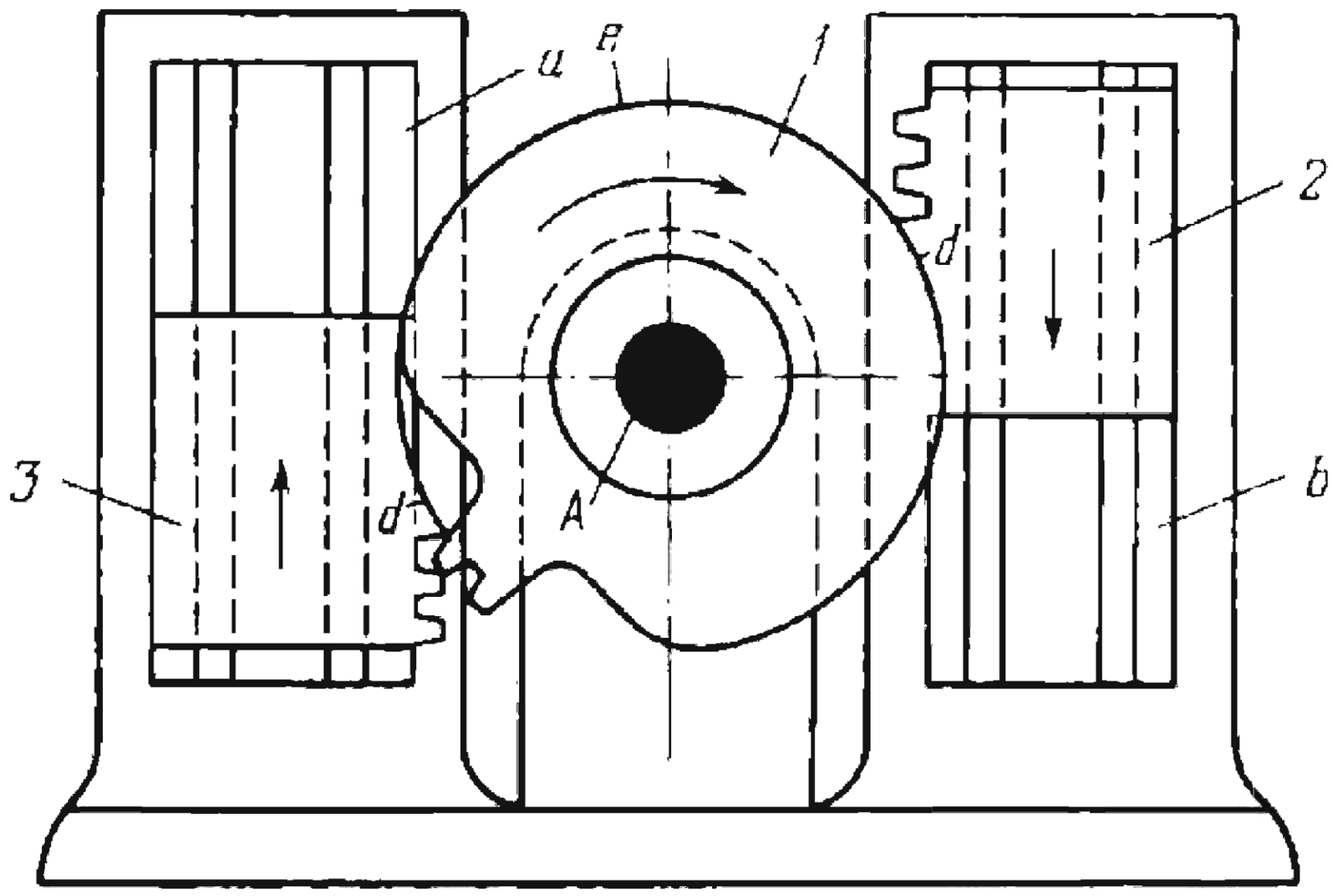

Two-tooth driving gear *1* turns about fixed axis *A*. Toothed racks *2* and *3* slide along fixed guides *b* and *a*. When gear *1* oscillates, racks *3* and *2* slide in opposite directions with dwells. Concentric locking surface *e* on gear *1* engages concave surfaces *d* on the racks, locking the latter against unintentional motion during their dwells.

2357	THREE-LINK TOOTHED DWELL MECHANISM WITH A STRAIGHT LOCKING FEATURE	SG D

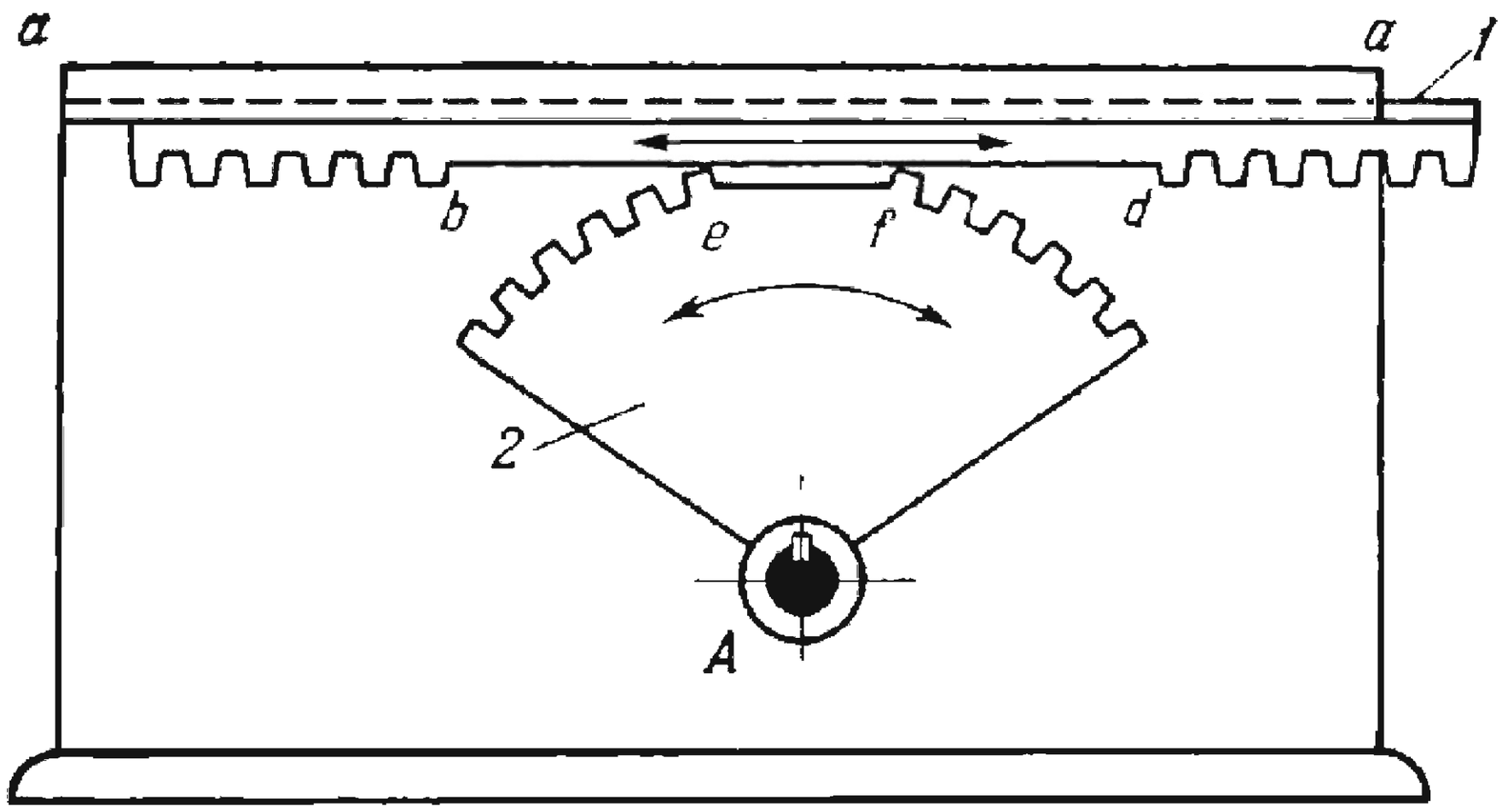

Driving toothed rack *1* reciprocates in fixed guides *a-a*. Segment gear *2* turns about fixed axis *A* and has two dwells each cycle when the toothless straight portion *bd* of the rack slides along teeth *e* and *f* of the gear.

2358	THREE-LINK TOOTHED GEARING WITH LAG OF THE DRIVEN LINK	GS D

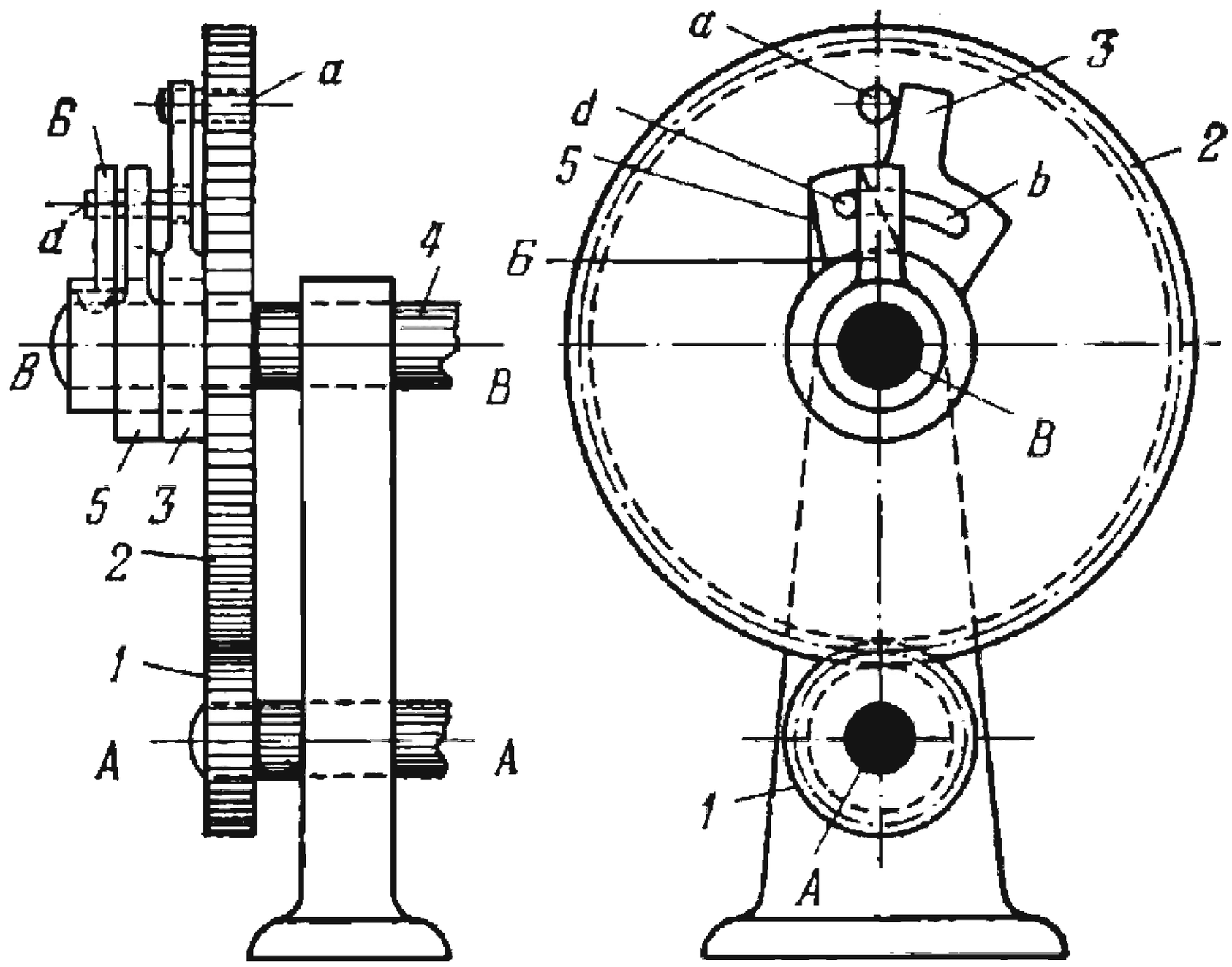

Pinion *1* and gear *2* rotate about fixed axes *A* and *B*. Rotation of pinion *1* is transmitted to shaft *4* with a certain lag. Gear *2*, sector *3* and sector *5* are mounted freely on shaft *4*. Sector *3* has circular slot *b*. Sectors *3* and *5* are connected together by pin *d* which is rigidly mounted in sector *5* and enters slot *b*. Link *6* is rigidly mounted on (keyed to) shaft *4*. When pinion *1* begins to rotate, it drives gear *2*, but shaft *4* will remain stationary until pin *a* turns sector *3* which, in turning, brings pin *d* into engagement with the lug of link *6*. After this, shaft *4* begins to rotate.

2359	THREE-LINK SPATIAL TOOTHED GEARING WITH DWELLS OF THE DRIVEN LINK AND A GROOVED LOCKING FEATURE	SG D

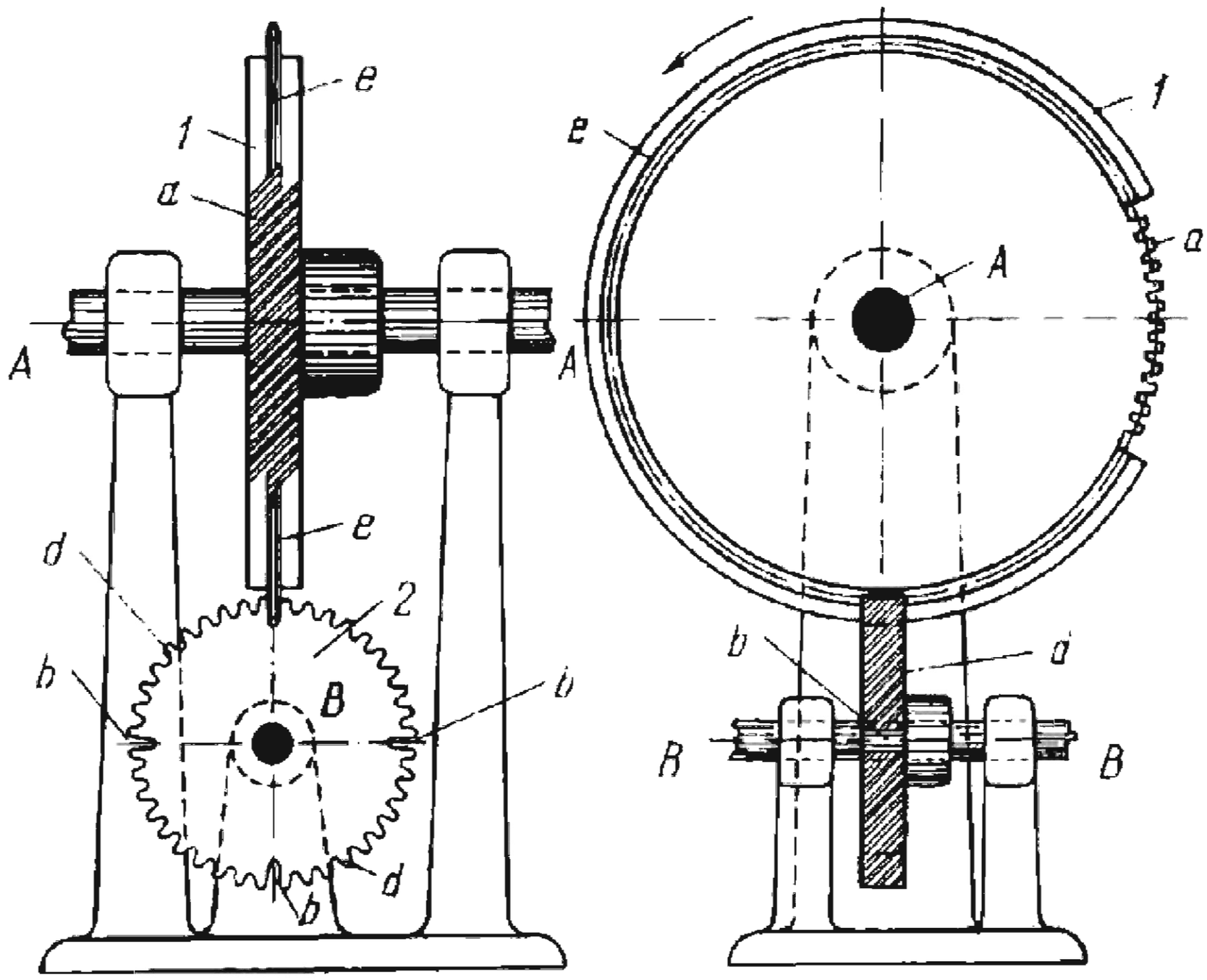

Helical gears *1* and *2* rotate about fixed axes *A* and *B*. When driving gear *1* rotates continuously, driven gear *2* rotates intermittently with dwells. Gear *1* has helical teeth *a* and concentric projection *e*. Gear *2* has four symmetrically located grooves *b* with helical teeth *d* between them. The number of helical teeth *a* of driving gear *1* equals the number of helical teeth *d* between two adjacent grooves of gear *2*. When gear *1* rotates continuously, its projection *e* periodically enters a groove *b* of gear *2* thereby locking the latter against unintentional rotation during the dwell. For each revolution of gear *1*, gear *2* has four dwells, turning through 90° between successive dwells.

2360	THREE-LINK TOOTHED GEARING WITH DWELLS OF THE DRIVEN LINK AND WITH ROLLING AND SLIDING LEVERS	SG D

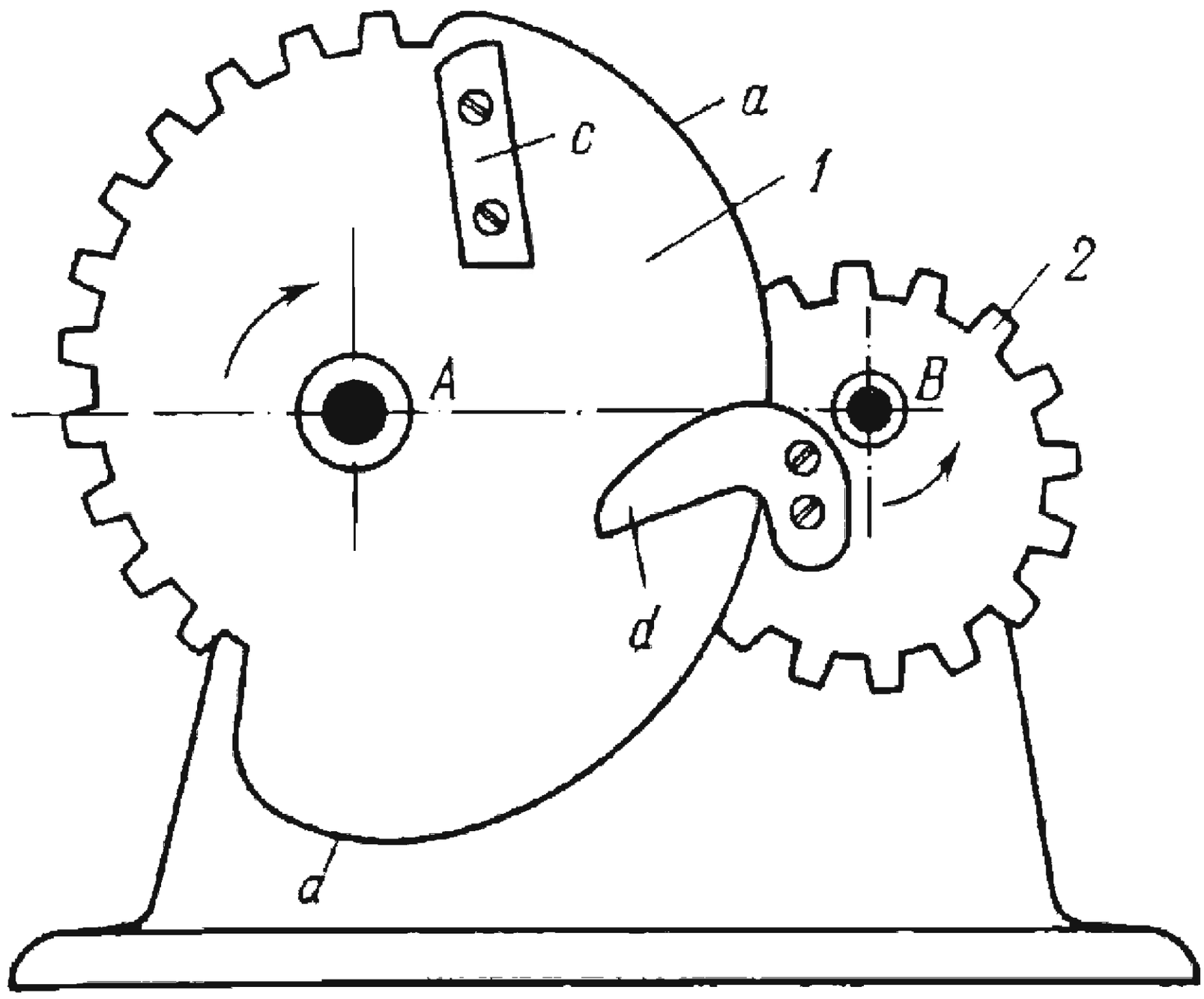

Segment gears *1* and *2* rotate about fixed axes *A* and *B*. When noncircular driving gear *1* rotates continuously, eccentric driven gear *2* rotates intermittently with dwells. Concentric locking surface *a* engages a concave surface on gear *2* to avoid unintentional rotation of this gear during its dwell periods. Rolling levers *c* and *d*, mounted rigidly on gears *1* and *2*, come into contact before the instant of engagement of the gear teeth. This provides smooth velocity increase of driven gear *2* and thereby reduces impacts that may occur when the teeth come into engagement. The pitch point of levers *c* and *d* lies on the line of centres *AB* of gears *1* and *2* only at the initial instant of contact of the levers. During the rest of the period of engagement, it does not lie on line *AB*. The relative motion of levers *c* and *d* consists of sliding as well as rolling motion.

2361	THREE-LINK TOOTHED GEARING WITH DWELLS OF THE DRIVEN LINK AND WITH ROLLING LEVERS	SG D

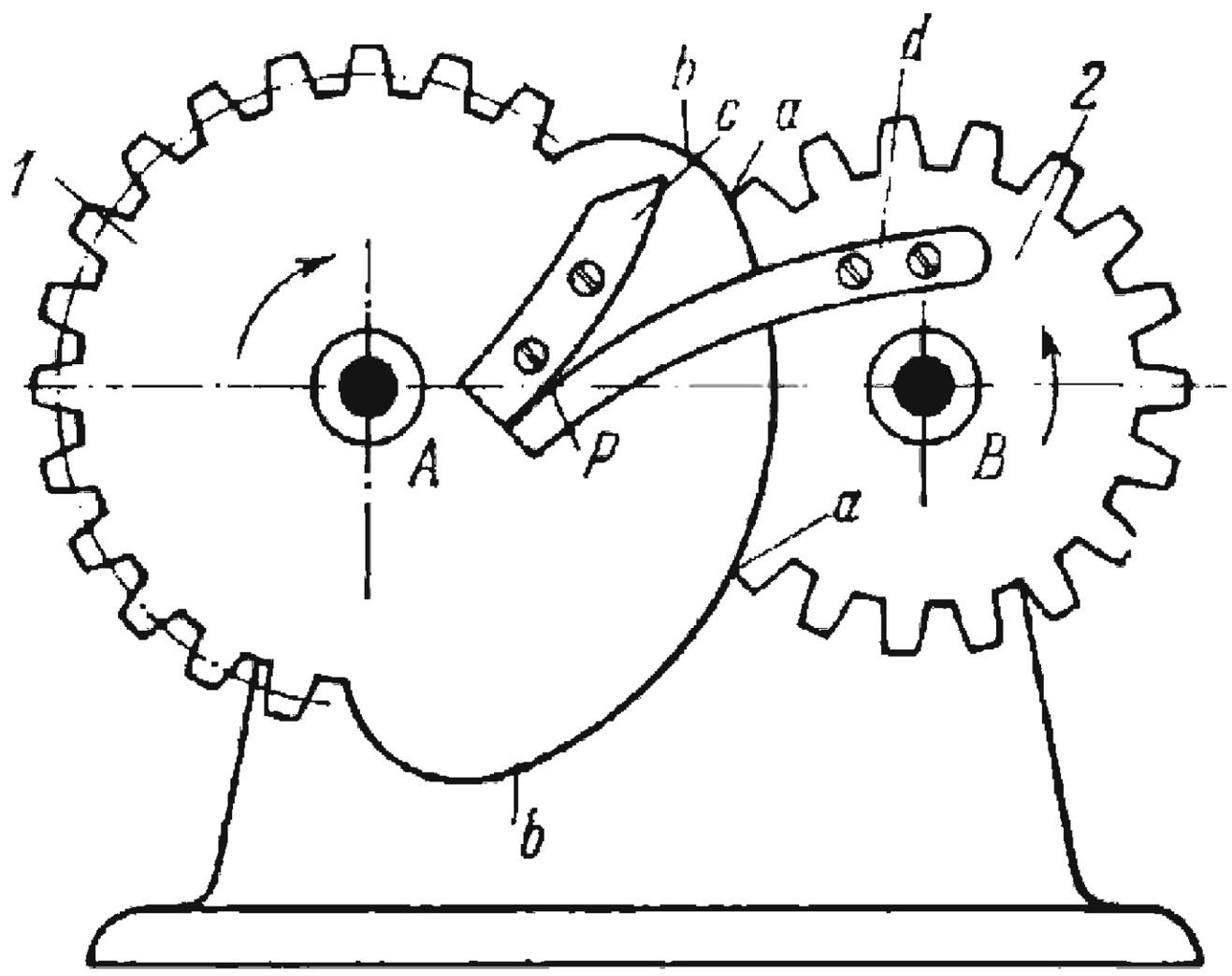

Segment gears *1* and *2* rotate about fixed axes *A* and *B*. When driving gear *1* rotates continuously, driven gear *2* rotates intermittently with dwells. Concentric locking surface *a-a* engages a concave surface on gear *2* to avoid unintentional rotation of this gear during its dwell periods. Rolling levers *c* and *d*, mounted rigidly on gears *1* and *2*, come into contact before the instant of engagement of the gear teeth. This provides smooth velocity increase of driven gear *2* and thereby reduces impacts that may occur when the teeth come into engagement. Arcs *b* of gear *1* are described with a smaller radius than arc *a-a* so that gear *2* can turn freely at the instant of contact of the profiles of levers *c* and *d*. Pitch point *P* of levers *c* and *d* lies on the line of centres *AB* of the gears during the whole period of lever engagement. Thus the relative motion of levers *c* and *d* consists of pure rolling without sliding.

2362	THREE-LINK TOOTHED GEARING WITH DWELLS OF THE DRIVEN LINK AND A SHOCK-ABSORBING SPIDER	SG D

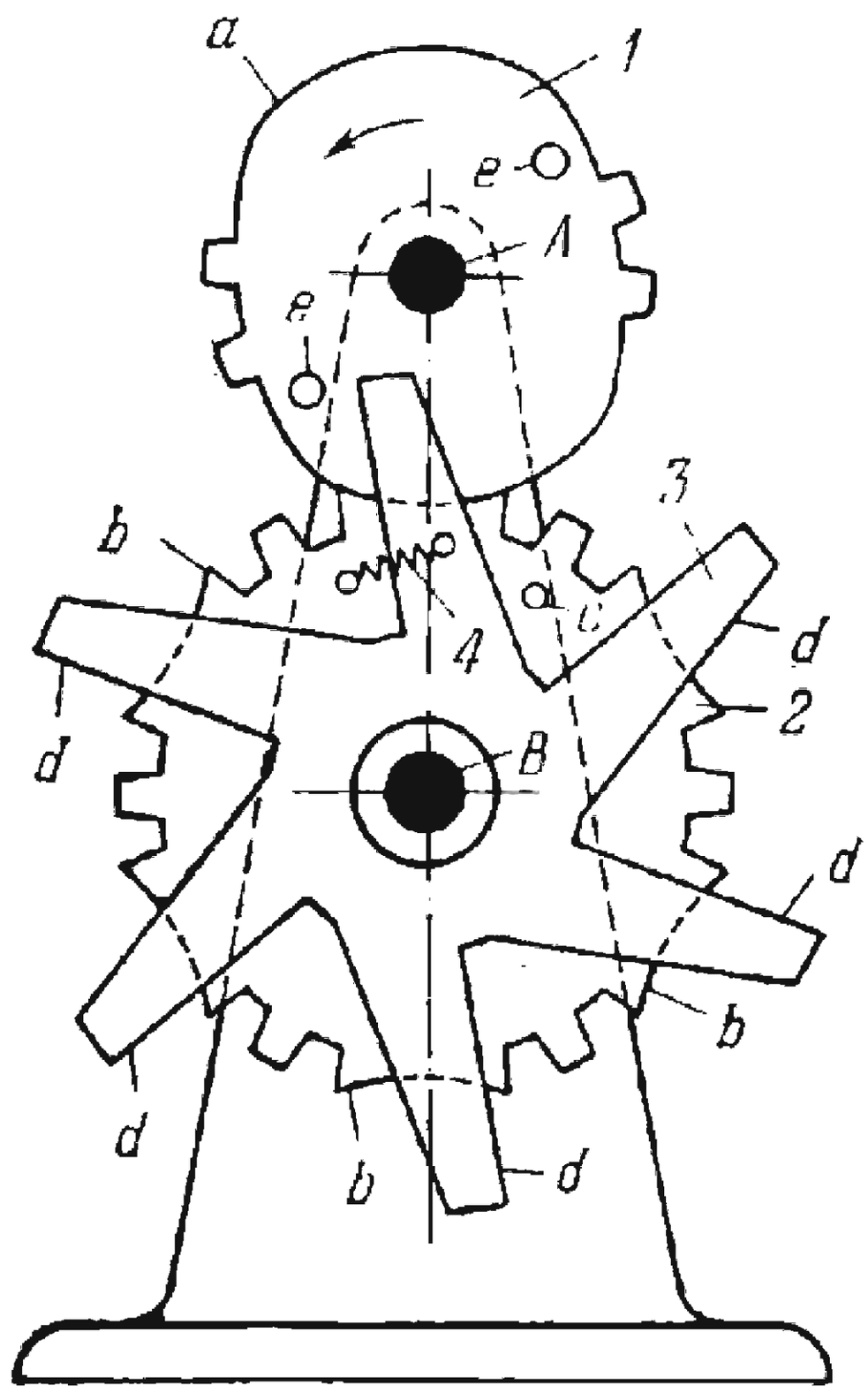

Segment gears *1* and *2* rotate about fixed axes *A* and *B*. When gear *1* rotates continuously counterclockwise, gear *2* rotates intermittently with dwells. Concentric locking surfaces *a* engage concave surfaces *b* to avoid unintentional rotation of gear *2* during its dwell periods. Impacts are reduced at the instants when the teeth of gears *1* and *2* come into engagement by freely mounted spider *3* which has as many arms *d* as there are locking arcs *b*. Spider *3* is connected to gear *2* by spring *4*. Clockwise rotation of spider *3* with respect to gear *2* is restricted by pin *c*. Just before the teeth of gears *1* and *2* come into engagement, one of the pins *e* of gear *1* engages the corresponding arm of spider *3*, turning the spider clockwise and imparting a certain initial velocity to gear *2*. This reduces the impact that may occur when the teeth of gears *1* and *2* begin to mesh.

2363	THREE-LINK TOOTHED BEVEL GEARING WITH ALTERNATING DRIVEN LINK ROTATION	SG D

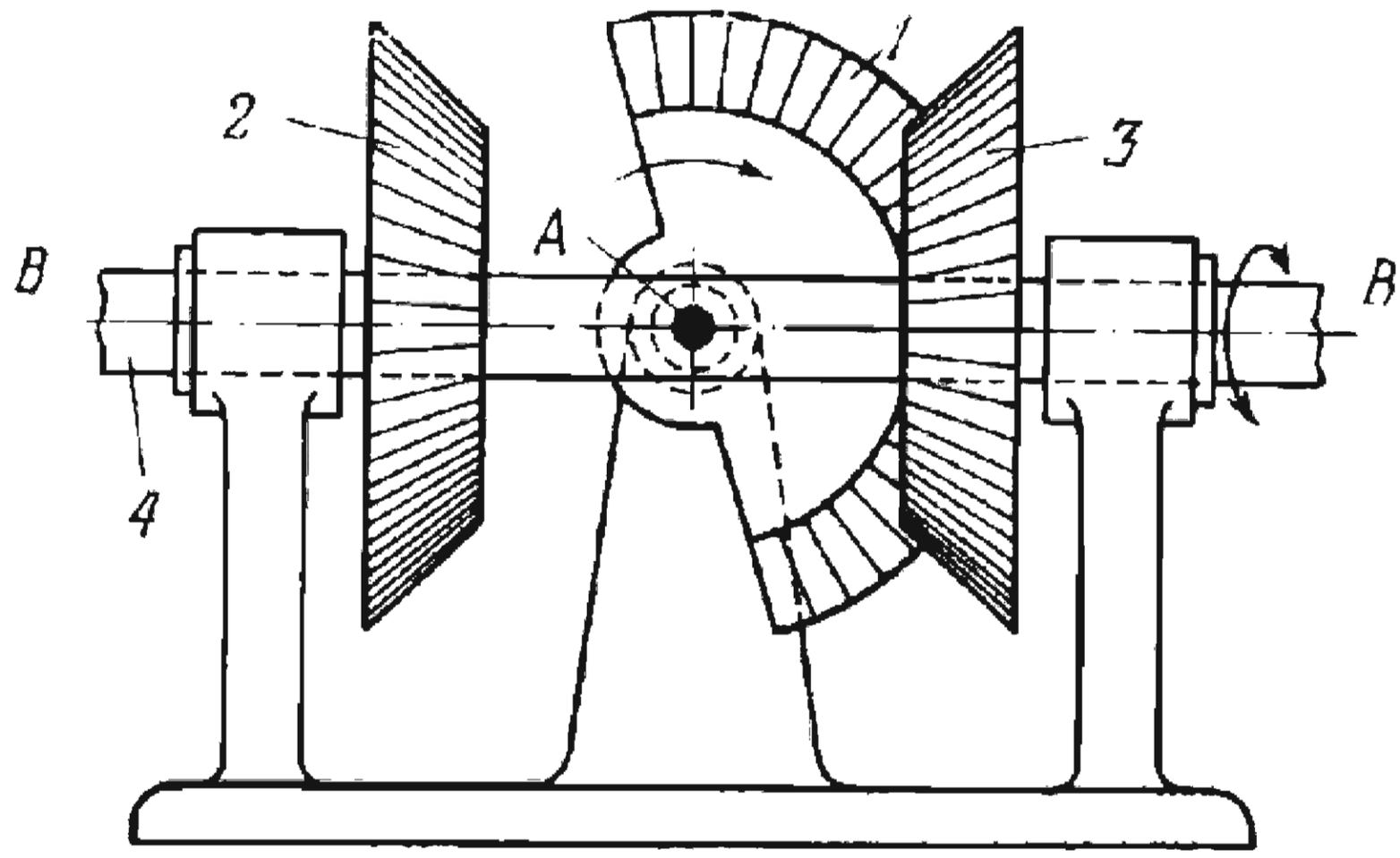

Segment bevel gear *1* rotates about fixed axis *A*. Full bevel gears *2* and *3*, keyed on shaft *4*, rotate about fixed axis *B*. Segment gear *1* rotates continuously in one direction, alternately engaging gears *2* and *3* so that shaft *4* is periodically reversed.

2364	THREE-LINK TOOTHED GEARING WITH UNIFORM INTERMITTENT MOTION OF THE DRIVEN LINK	SG D

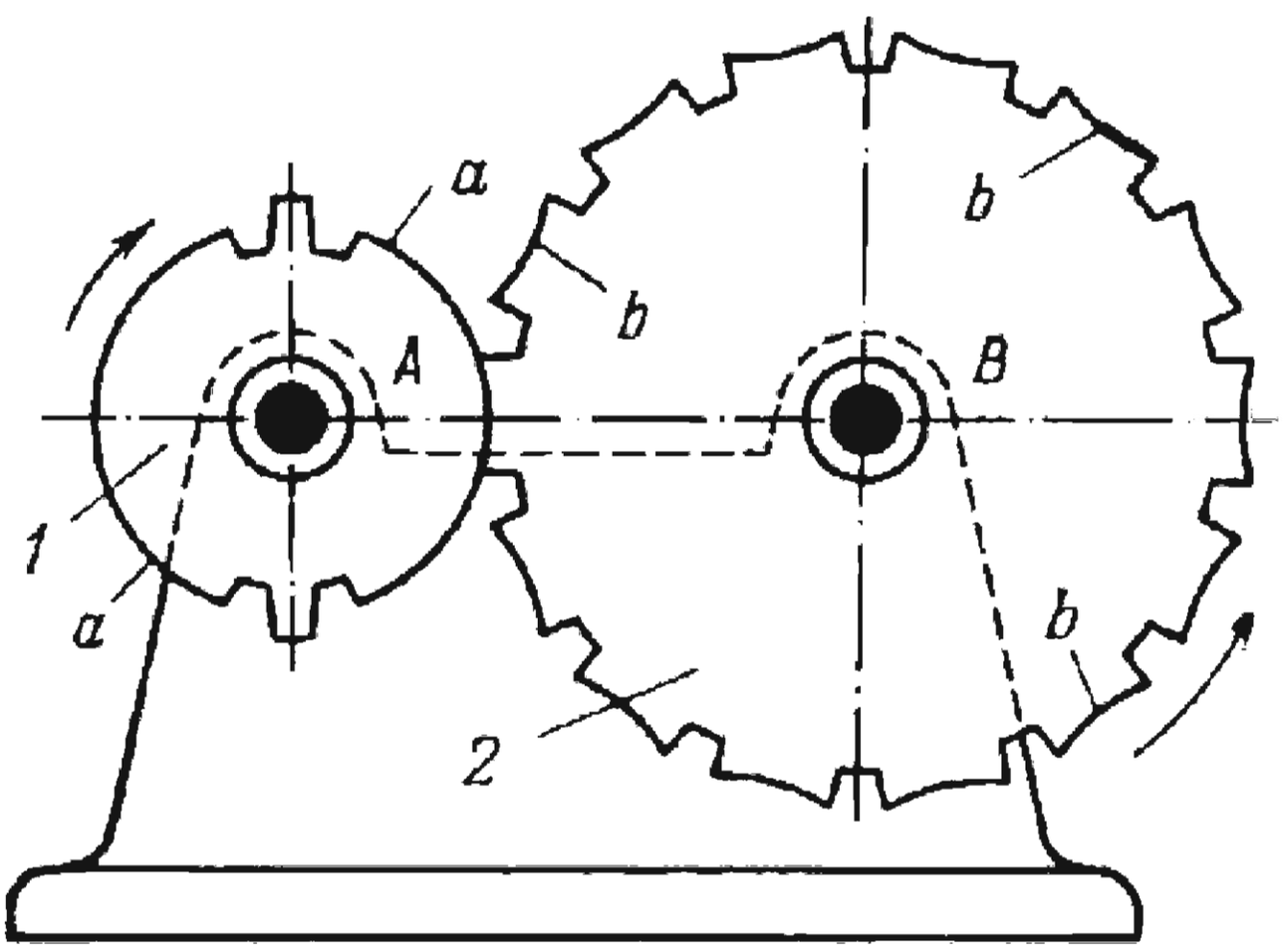

Gears *1* and *2* rotate about fixed axes *A* and *B*. When driving gear *1* rotates continuously clockwise, driven gear *2* rotates intermittently with dwells. Concentric locking surfaces *a* of gear *1* engage concave surfaces *b* of gear *2* to avoid unintentional rotation of gear *2* during its dwell periods. Due to the symmetrical arrangement of the teeth and locking features, gear *2* has uniform intermittent motion when gear *1* rotates at uniform velocity. To each revolution of gear *1*, gear *2* has two periods of motion and two dwells.

2365	THREE-LINK TOOTHED GEARING WITH DWELLS OF THE DRIVEN GEAR AND A LOCKING RING	SG D

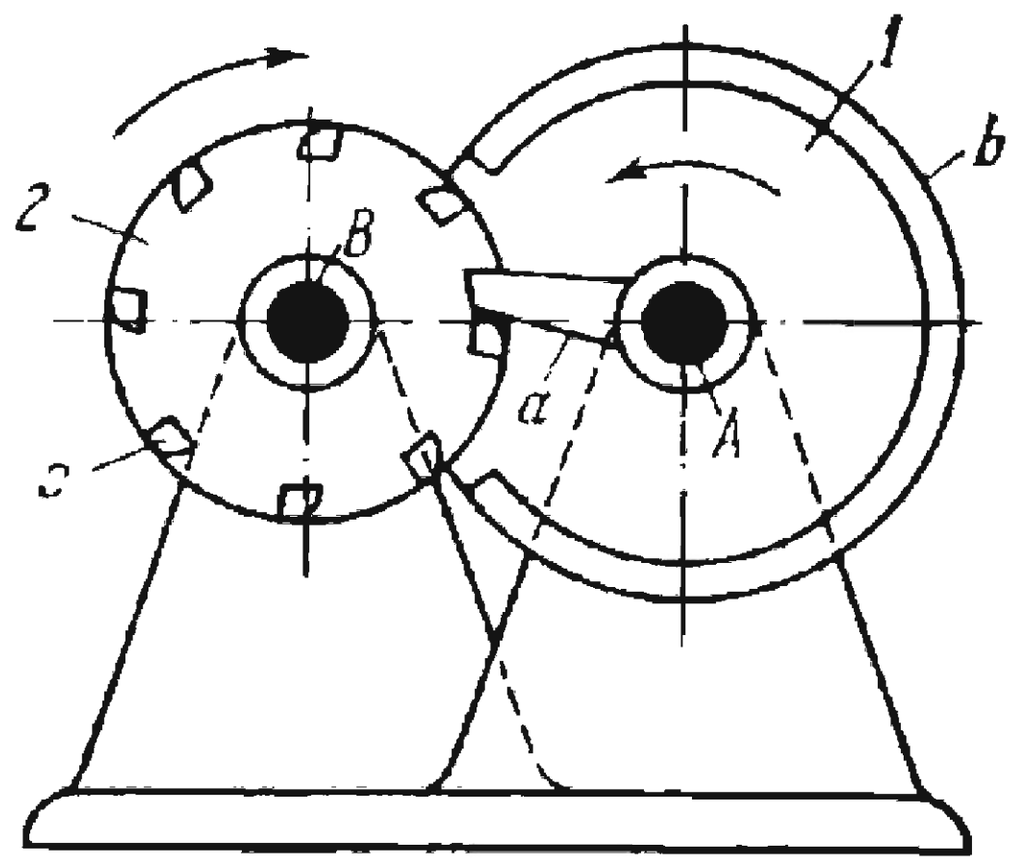

Gears *1* and *2* rotate about fixed axes *A* and *B*. Gear *2* has teeth *c* located on its end face. Gear *1* has one tooth *a* and locking ring *b*. When driving gear *1* rotates continuously, driven gear *2* rotates only during the periods that tooth *a* engages a tooth *c*. After tooth *a* runs out of engagement with tooth *c*, locking ring *b* slides along the inner surfaces of two adjacent teeth *c*, locking gear *2* against unintentional motion during its long dwell period. To each revolution of gear *1*, gear *2* turns through an angle equal to

$$\varphi = \frac{2\pi}{z_2}$$

where z_2 is the number of teeth of gear *2*. An impact occurs when teeth *a* and *c* come into engagement.

2366	THREE-LINK TOOTHED GEARING WITH DWELLS OF THE DRIVEN GEAR	SG D

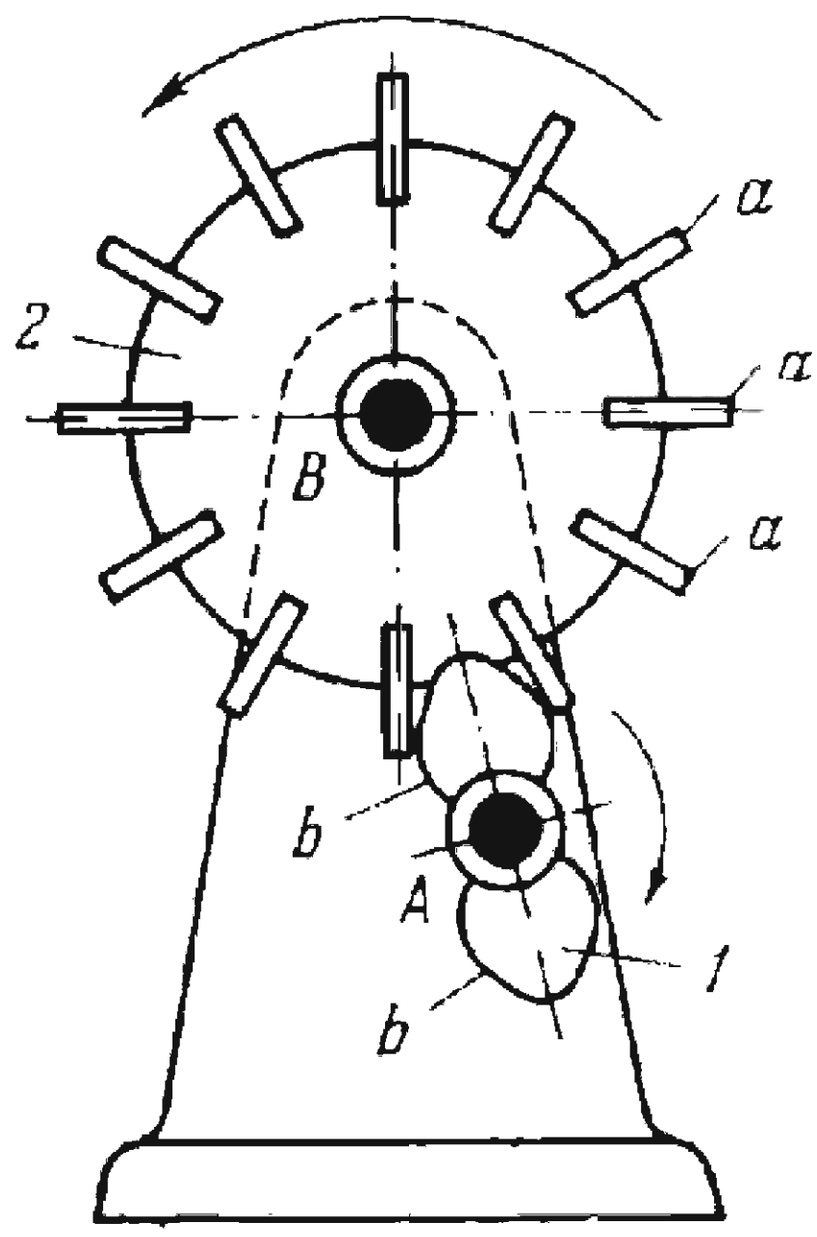

Gears *1* and *2* rotate about fixed axes *A* and *B*. Gear *1* has two teeth *b*. Gear *2* has teeth *a* of rectangular shape. When gear *1* rotates continuously, gear *2* rotates only during the periods that a tooth *b* engages a tooth *a*. To each revolution of gear *1*, gear *2* turns through an angle equal to

$$\varphi = \frac{4\pi}{z_2}$$

where z_2 is the number of teeth of gear *2*. In a full revolution gear *2* has z_2 dwells. An impact occurs at the instant teeth *a* and *b* come into engagement.

2367	THREE-LINK TOOTHED GEARING WITH SHORT DWELLS OF THE DRIVEN GEAR	SG D

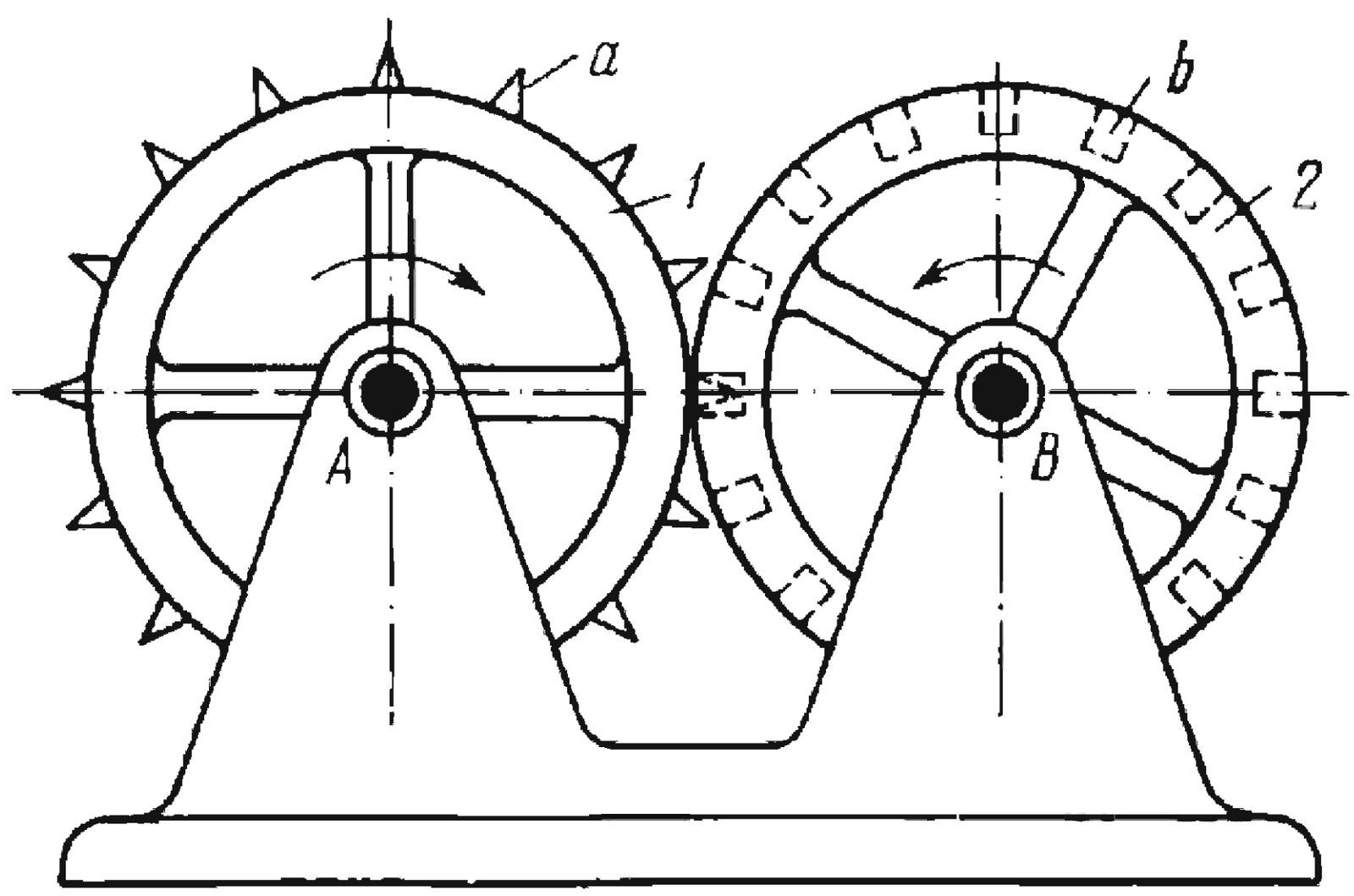

Gears *1* and *2* rotate about fixed axes *A* and *B*. Gear *1* has teeth *a* of triangular shape. Gear *2* has recesses *b*. The number of teeth *a* equals the number of recesses *b*. The average transmission ratio in a full cycle is $i_{12} = -1$. When driving gear *1* rotates continuously at uniform velocity, gear *2* has intermittent rotation with short dwells.

2368	THREE-LINK TOOTHED GEARING WITH INTERMITTENT ROTATION OF THE DRIVEN GEAR	SG D

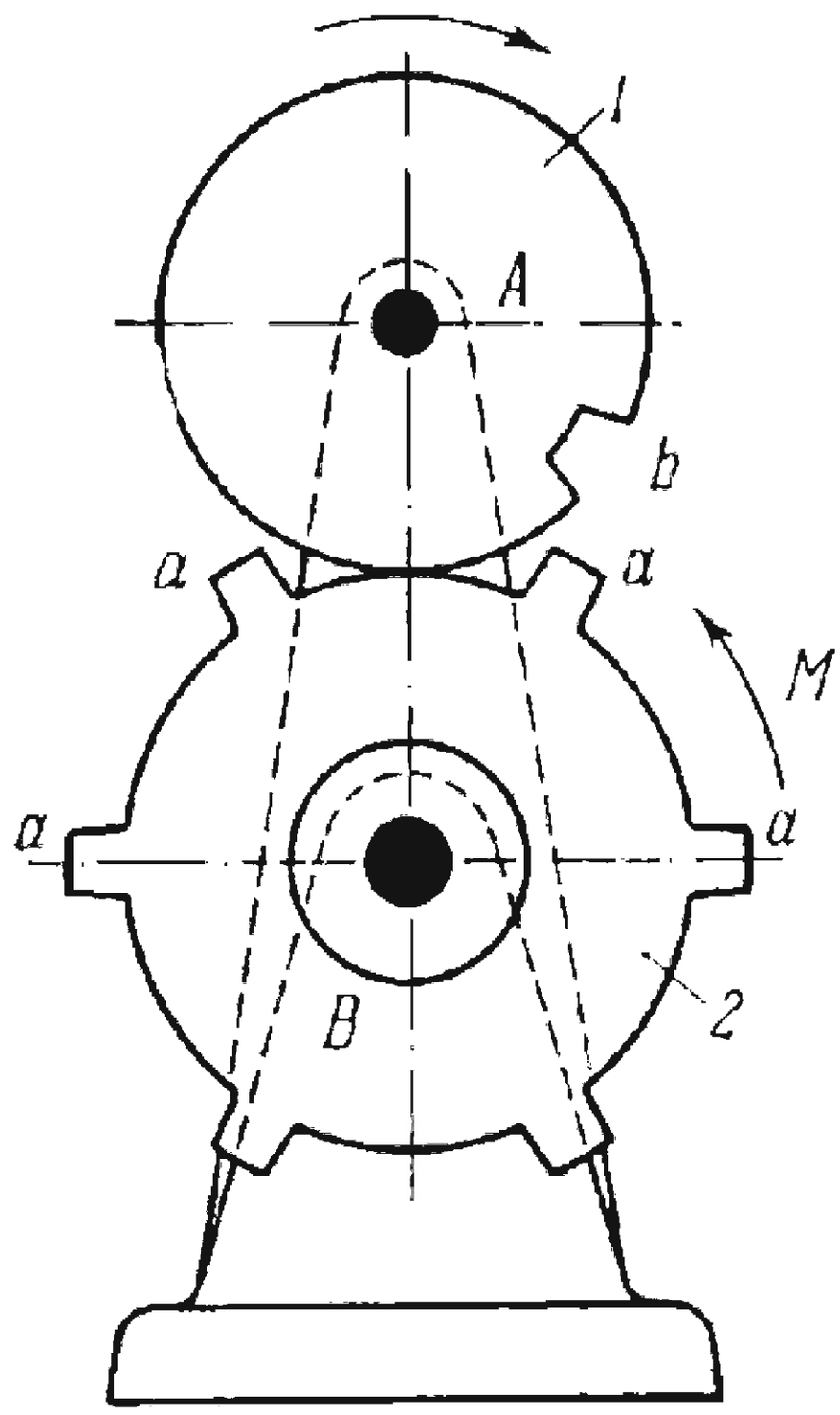

Gears *1* and *2* rotate about fixed axes *A* and *B*. Driven gear *2* is subject to torque *M* of constant sign. Gear *2* has teeth *a* and gear *1* has one tooth space *b*. When gear *1* rotates continuously, gear *2* rotates only during the periods that tooth space *b* engages a tooth *a*. To each revolution of gear *1*, gear *2* turns through an angle equal to

$$\varphi = \frac{2\pi}{z_2}$$

where z_2 is the number of teeth of gear *2*. When gear *1* rotates at uniform velocity, gear *2* has intermittent rotation. An impact occurs at the instant a tooth *a* comes into engagement with tooth space *b*.

2369	THREE-LINK TOOTHED GEARING WITH A LOCKING PAWL AND DWELLS OF THE DRIVEN GEAR	SG D

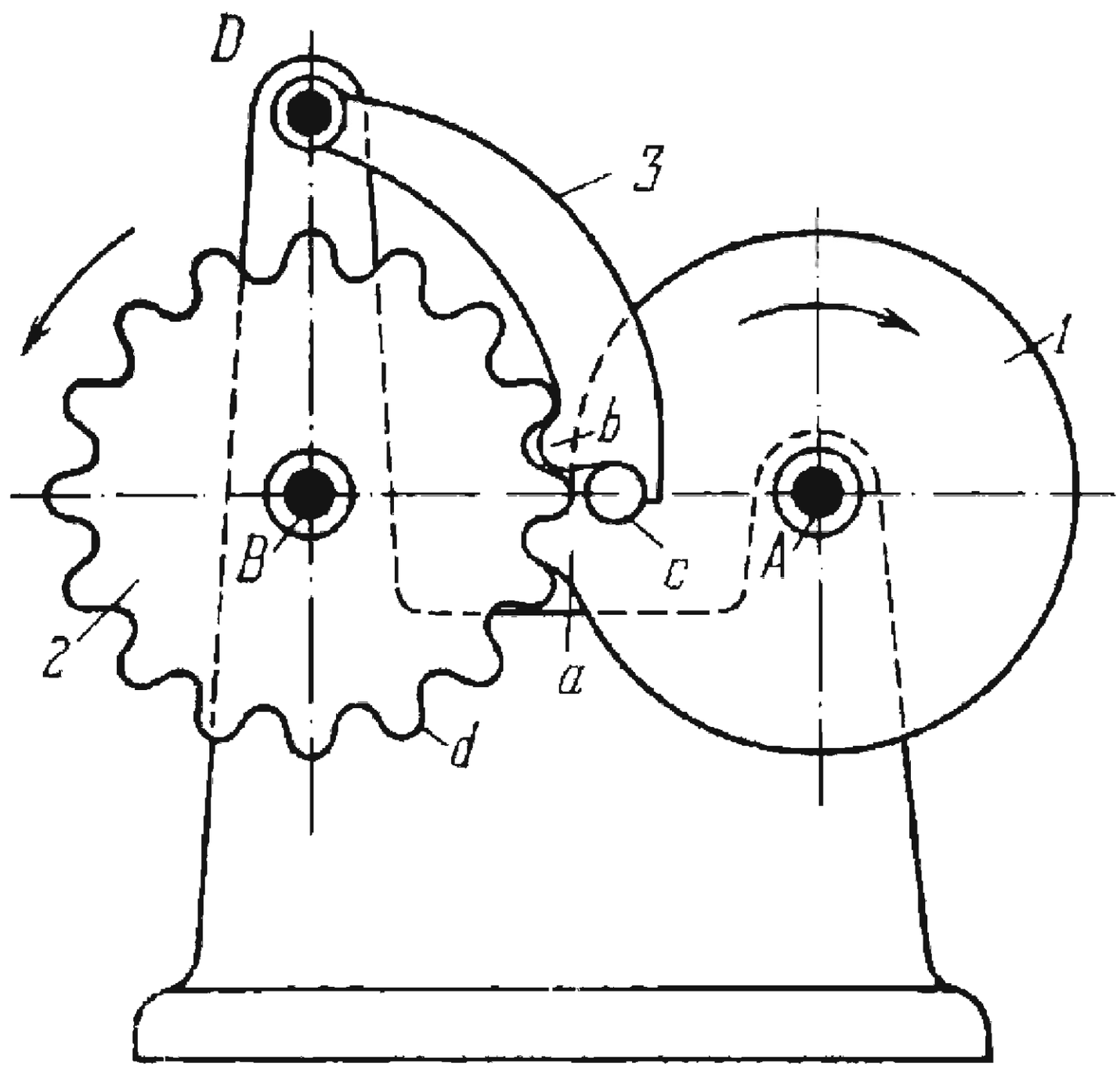

Gears *1* and *2* rotate about fixed axes *A* and *B*. Driving gear *1* has one tooth *a*. When gear *1* rotates continuously, gear *2* rotates only during the periods that tooth *a* engages a tooth *d* of gear *2*. To each revolution of gear *1*, gear *2* turns through an angle equal to

$$\varphi = \frac{2\pi}{z_2}$$

where z_2 is the number of teeth of gear *2*. To prevent unintentional rotation of gear *2* and to lock it during its dwell periods, tooth *b* of pawl *3*, which turns about fixed axis *D*, enters a tooth space of gear *2*. Pin *c* on gear *1* pushes pawl *3* out of engagement as tooth *a* engages gear *2*. An impact occurs at the instant teeth *a* and *d* come into engagement.

2370	THREE-LINK TOOTHED INTERMITTENT GEARING WITH DWELLS AND A CIRCULAR LOCKING FEATURE	SG D

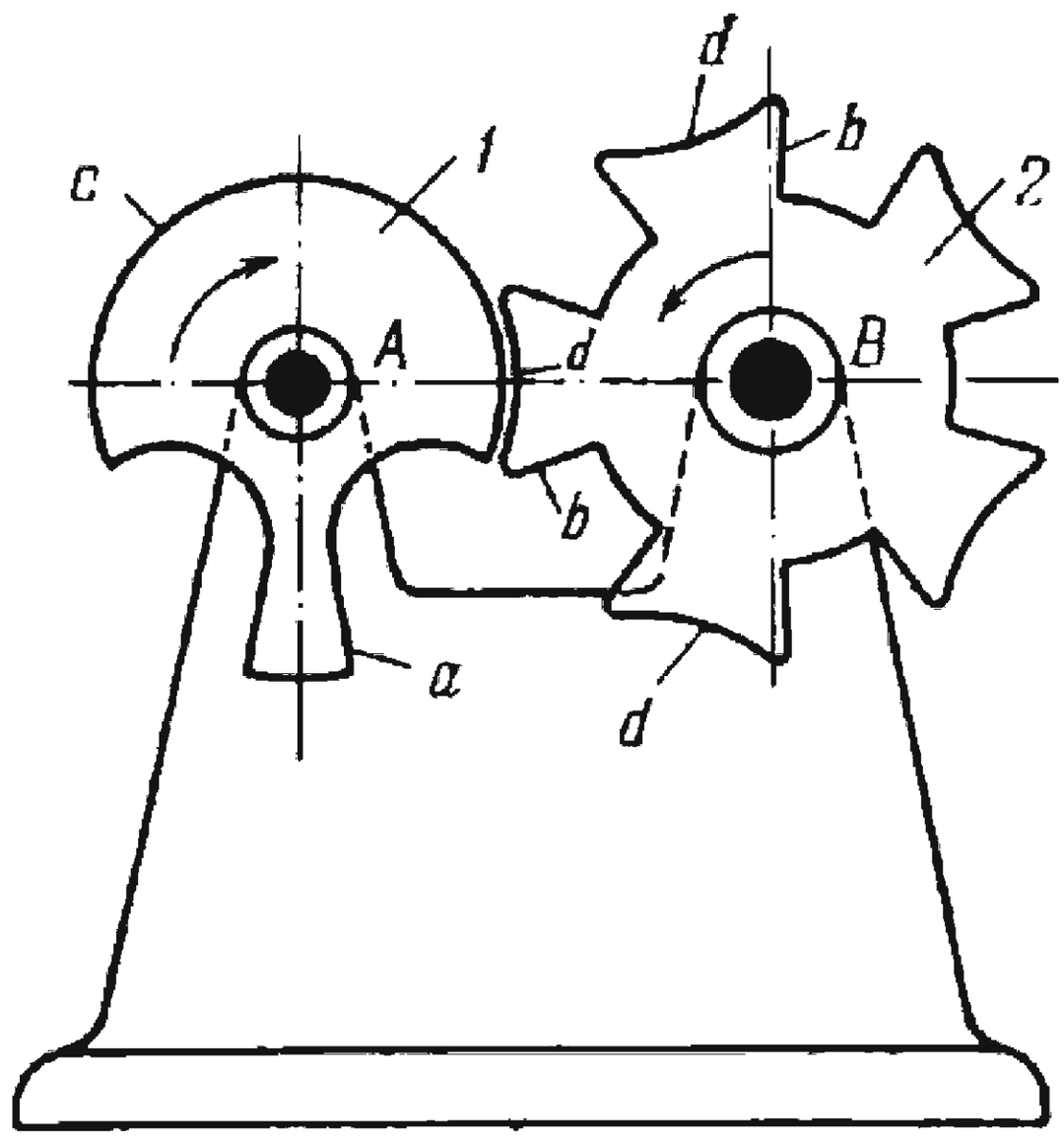

Gears *1* and *2* rotate about fixed axes *A* and *B*. Gear *1* has one tooth *a*. When driving gear *1* rotates continuously, driven gear *2* rotates only during the periods that tooth *a* engages a tooth *b* of gear *2*. To each revolution of gear *1*, gear *2* turns through an angle equal to

$$\varphi = \frac{2\pi}{z_2}$$

where z_2 is the number of teeth of gear *2*. For the given mechanism, $\varphi = \frac{2\pi}{5}$. To prevent unintentional rotation of gear *2* and to lock it during its dwell periods, gear *1* has concentric locking surface *c* which engages concave surfaces *d* on gear *2*. When gear *1* rotates at uniform velocity, gear *2* has intermittent rotation. An impact occurs at the instant that teeth *a* and *b* come into engagement.

2371	THREE-LINK TOOTHED GEARING WITH DWELLS OF THE DRIVEN GEAR AND A CIRCULAR LOCKING FEATURE	SG D

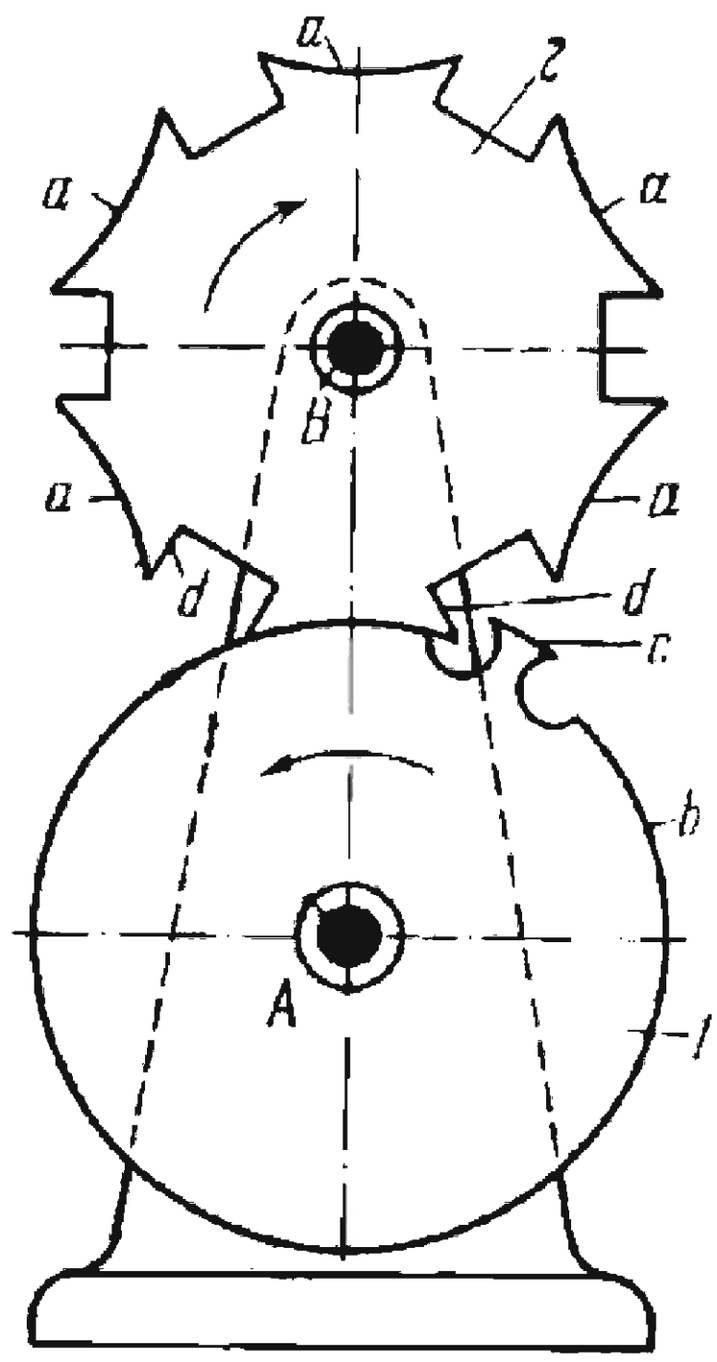

Gears *1* and *2* rotate about fixed axes *A* and *B*. Gear *1* has one tooth *c*. When driving gear *1* rotates continuously, driven gear *2* rotates only during the periods that tooth *c* engages a tooth *d* of gear *2*. To each revolution of gear *1*, gear *2* turns through an angle equal to

$$\varphi = \frac{2\pi}{z_2}$$

where z_2 is the number of teeth of gear *2*. For the given mechanism, $\varphi = \frac{\pi}{3}$. To prevent unintentional rotation of gear *2* and to lock it during its dwell periods, gear *1* has concentric locking surface *b* which engages concave surfaces *a* on gear *2*. When gear *1* rotates at uniform velocity, gear *2* has intermittent rotation. An impact occurs at the instant that teeth *a* and *c* come into engagement.

2372	THREE-LINK TOOTHED GEARING WITH DWELLS OF THE DRIVEN GEAR AND A CIRCULAR TRANSITION AND LOCKING FEATURE	SG D

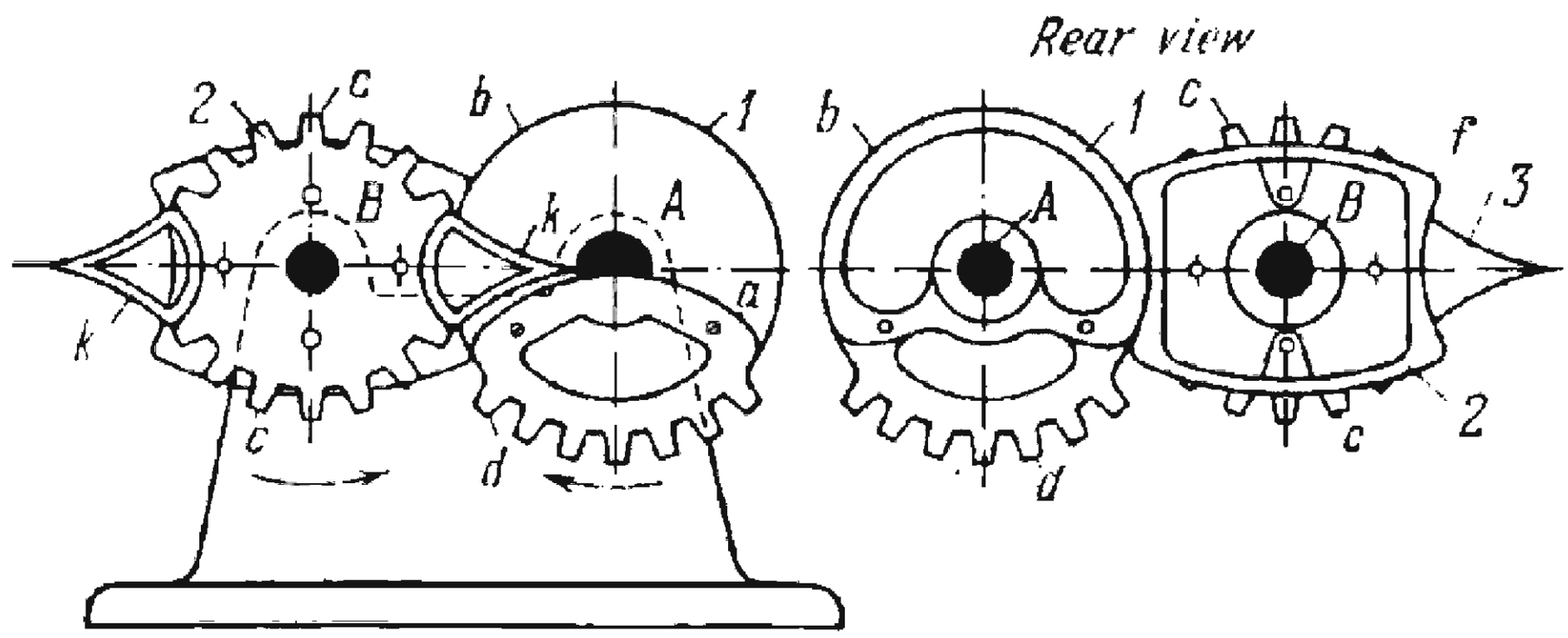

Gears *1* and *2* rotate about fixed axes *A* and *B*. Gear *1* has one gear segment *d*, and gear *2* has two gear segments *c*. When driving gear *1* rotates continuously, driven gear *2* rotates only during the periods that segment *d* meshes with one of the segments *c*. To each revolution of gear *1*, gear *2* turns through the angle $\varphi = 180°$. Smooth, impactless operation when segments *d* and *c* come into engagement is due to the provision of transition cam surfaces *a* and *k* whose profiles are portions of the centrodes in the relative motion of gears *1* and *2*. To prevent unintentional rotation of gear *2* and to lock it during its dwell periods, gear *1* has concentric locking surface *b* which engages concave surfaces *f* on gear *2*.

2373	THREE-LINK TOOTHED GEARING WITH DWELLS OF THE DRIVEN GEAR AND A CIRCULAR LOCKING FEATURE	SG D

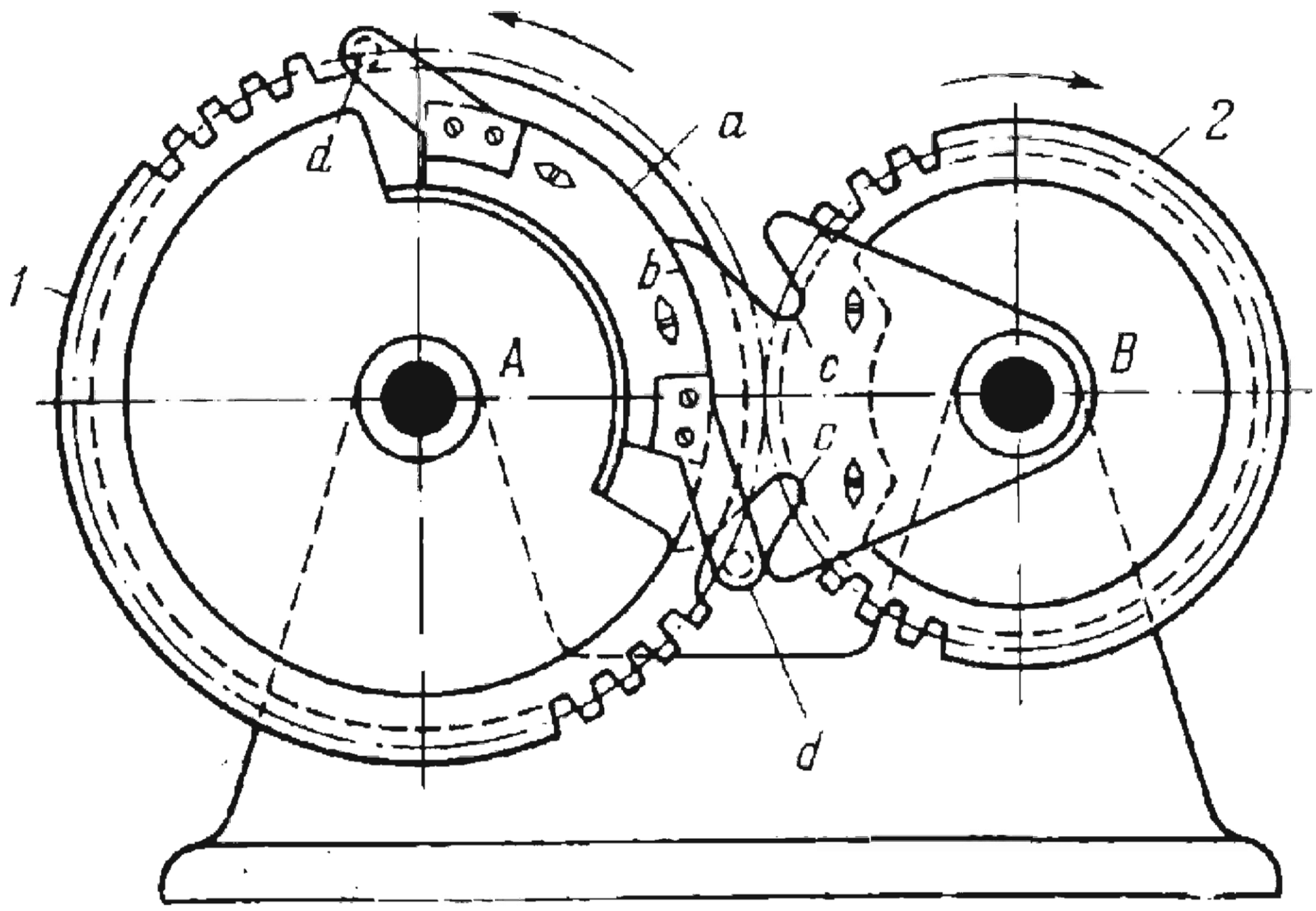

Gears *1* and *2* rotate about fixed axes *A* and *B*. Driving gear *1* transmits rotation to driven gear *2* with a single long dwell per revolution of the gears. To avoid impacts gear *2* is brought into and taken out of engagement by means of pins *d* of gear *1* which enter slots *c* of gear *2*. Concentric locking surface *a* engages concave surface *b* to prevent unintentional rotation of gear *2* during its dwell period.

2374	THREE-LINK TOOTHED GEARING WITH DWELLS OF THE DRIVEN GEAR AND A CIRCULAR LOCKING FEATURE	SG D

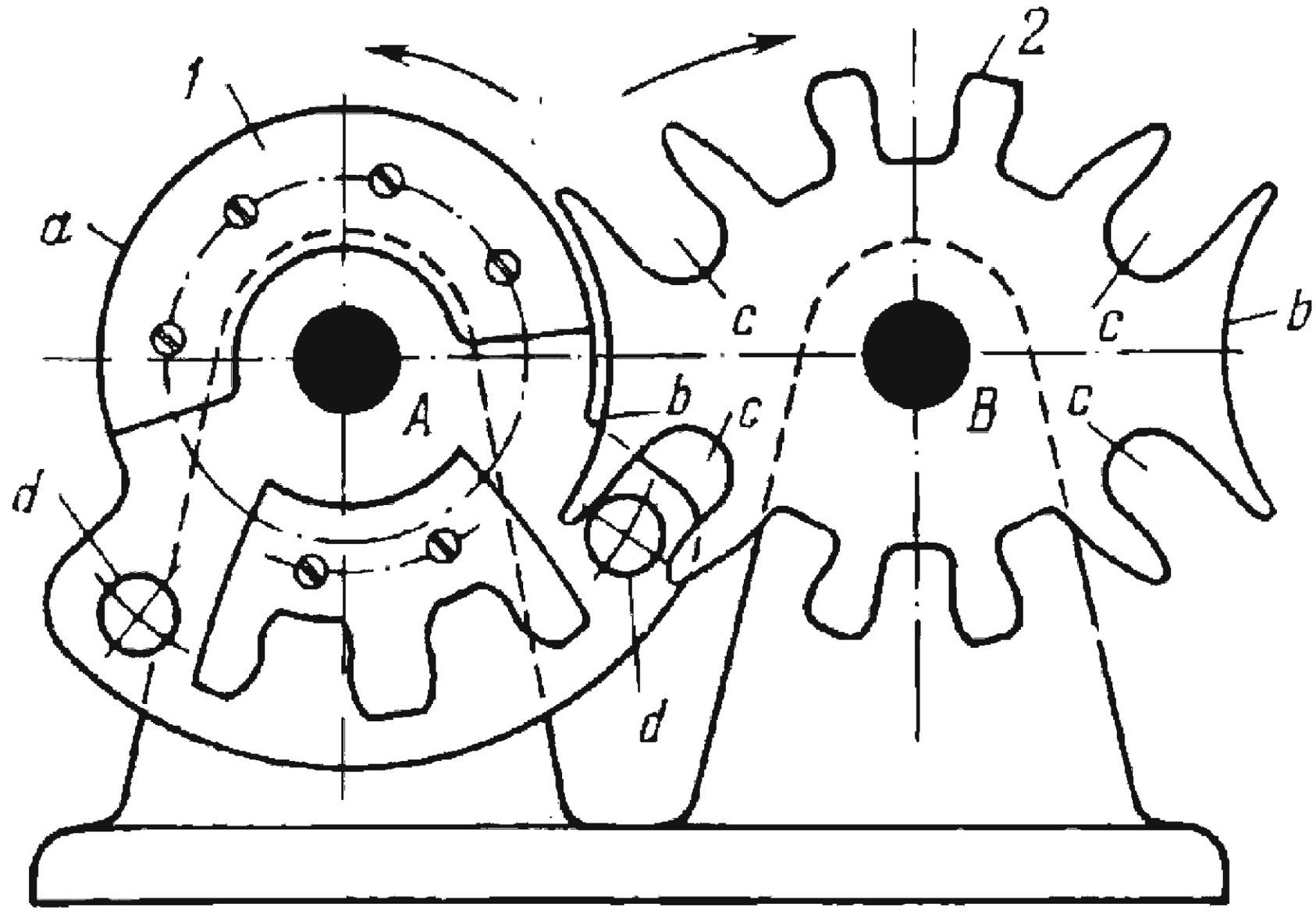

Gears *1* and *2* rotate about fixed axes *A* and *B*. Driving gear *1* transmits rotation to driven gear *2* with two long dwells per revolution of gear *2*. To avoid impacts gear *2* is brought into and taken out of engagement by means of pins *d* of gear *1* which enter slots *c* of gear *2*. Concentric locking surface *a* engages concave surfaces *b* to prevent unintentional rotation of gear *2* during its dwell periods.

2375	THREE-LINK SPATIAL TOOTHED GEARING WITH INTERMITTENT ROTATION OF THE DRIVEN LINK	SG D

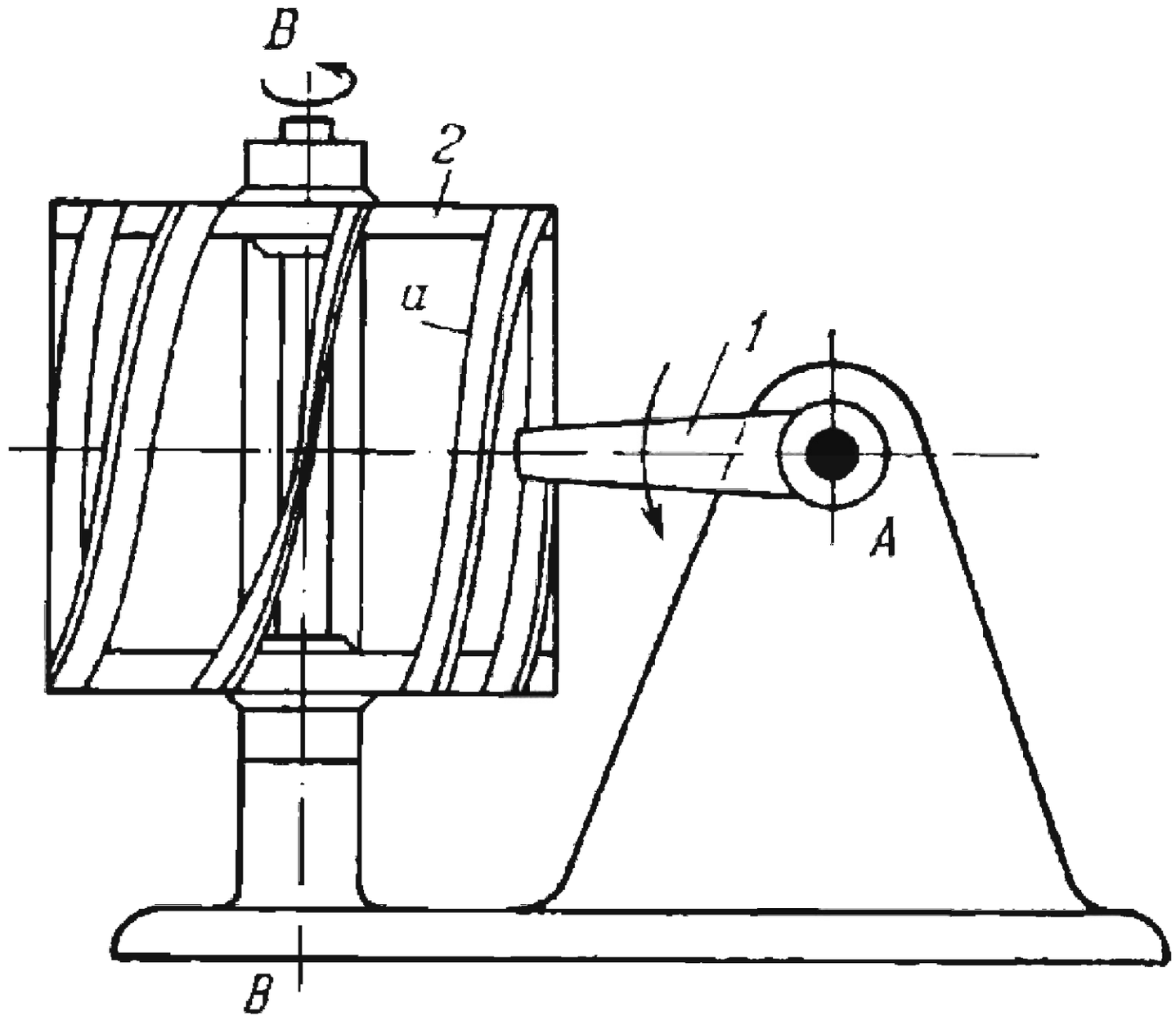

Crank *1* and wheel *2* rotate about crossed perpendicular fixed axes *A* and *B*. Wheel *2* has helical teeth *a*. When crank *1* rotates continuously, it engages teeth *a* and rotates wheel *2* intermittently with long dwells. To each revolution of crank *1*, wheel *2* turns through an angle equal to $\varphi = \frac{2\pi}{z_2}$, where z_2 is the number of teeth of wheel 2.

2376	THREE-LINK TOOTHED GEARING WITH A DWELL OF THE DRIVEN GEAR AND A SWINGING GEAR SECTOR	SG D

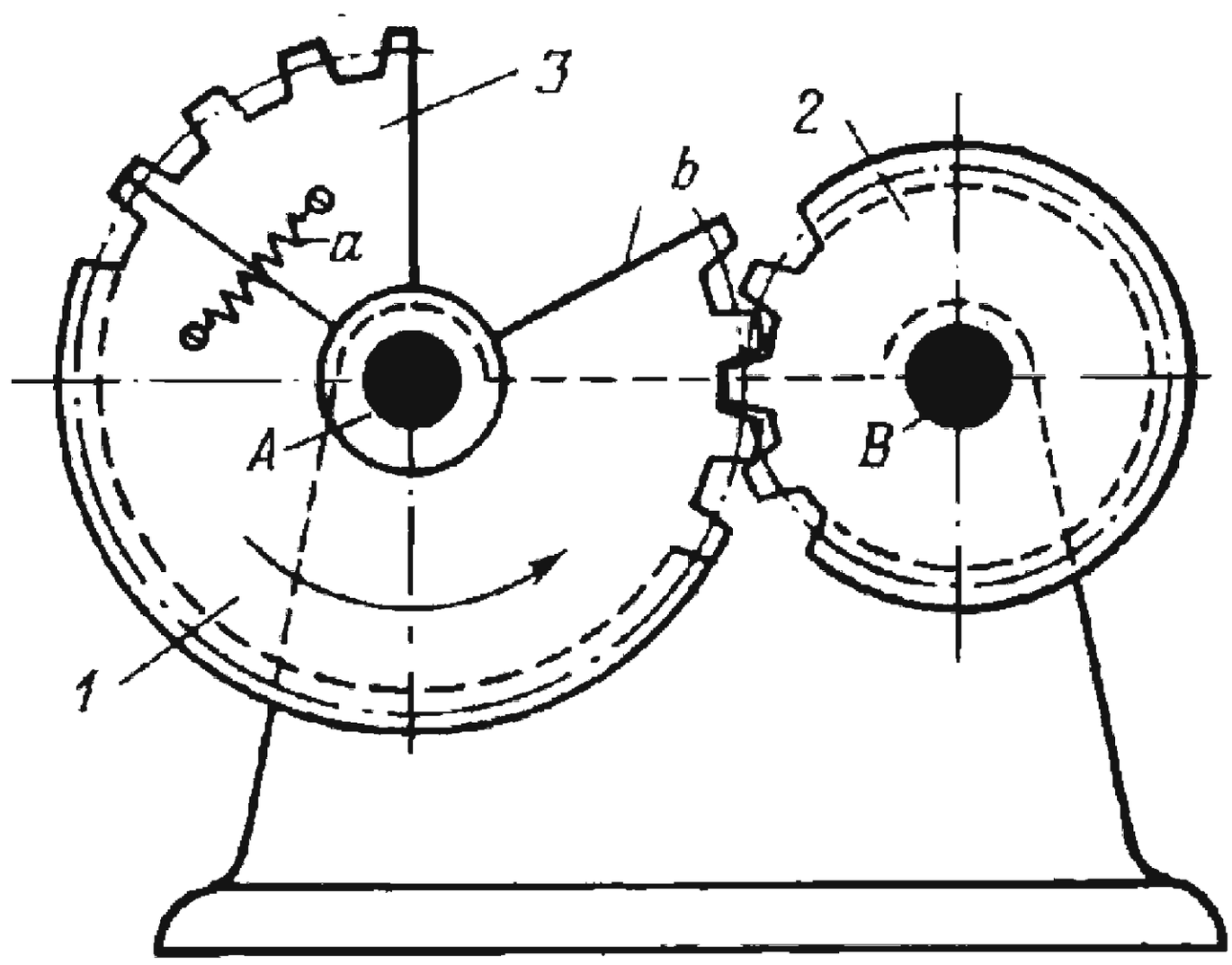

Segment gear *1* and gear *2* rotate about fixed axes *A* and *B*. When driving segment gear *1* rotates continuously counterclockwise, gear *2* rotates until it comes into engagement with gear sector *3* which swings freely about axis *A*. At this spring *a* is stretched and gear *2* has a long dwell until the side of sector *3* strikes side *b* of segment gear *1*. As soon as sector *3* is released by gear *2*, spring *a* draws it back to its initial position.

2377	THREE-LINK TOOTHED GEARING WITH DWELLS OF THE DRIVEN GEAR AND A CIRCULAR LOCKING FEATURE	SG D

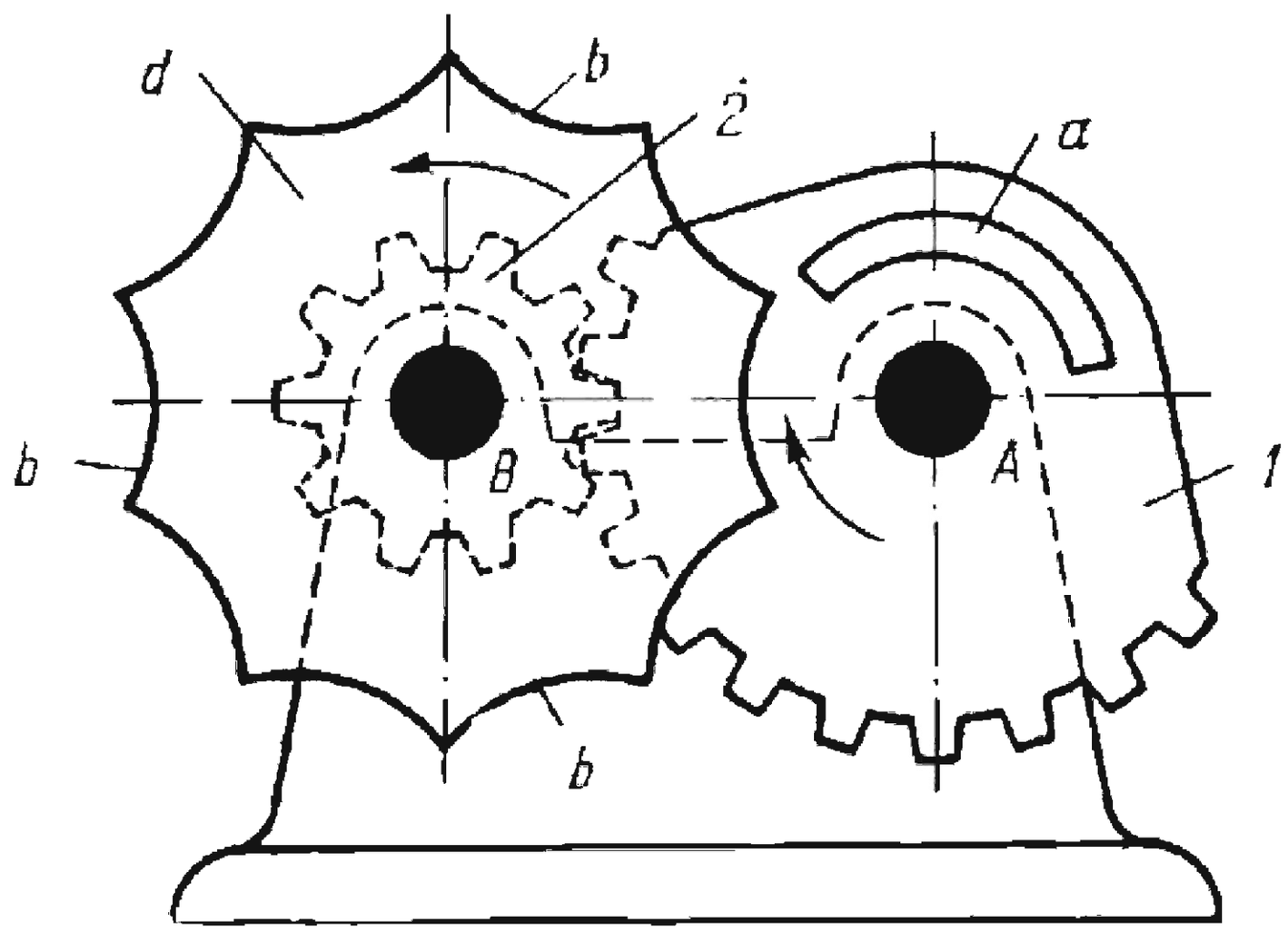

Segment gear *1* and gear *2* rotate about fixed axes *A* and *B*. When driving segment gear *1* rotates continuously clockwise, driven gear *2* rotates together with disk *d*, rigidly attached to gear *2*, until the teeth of segment gear *1* run out of engagement with those of gear *2*. Then concentric projection *a* engages a concave surface *b* of disk *d*, locking gear *2* in its dwell position. To each revolution of segment gear *1*, gear *2* turns through an angle equal to $\varphi_2 = 2.2\pi$. Therefore, following each revolution of segment gear *1*, gear *2* has a dwell in a position differing from its preceding position by the angle $\varphi = 0.2\pi$. The transmission ratio of the mechanism is

$$i_{12} = \frac{z_2}{z_1} = \frac{R_2}{R_1}\,\frac{2.2\pi}{\varphi_1}$$

where z_1, z_2, R_1 and R_2 are the numbers of teeth and pitch radii of segment gear *1* and gear *2*, and φ_1 is the central angle of segment gear *1*.

2378	THREE-LINK TOOTHED GEARING WITH UNIFORM INTERMITTENT MOTION OF THE DRIVEN LINK	SG D

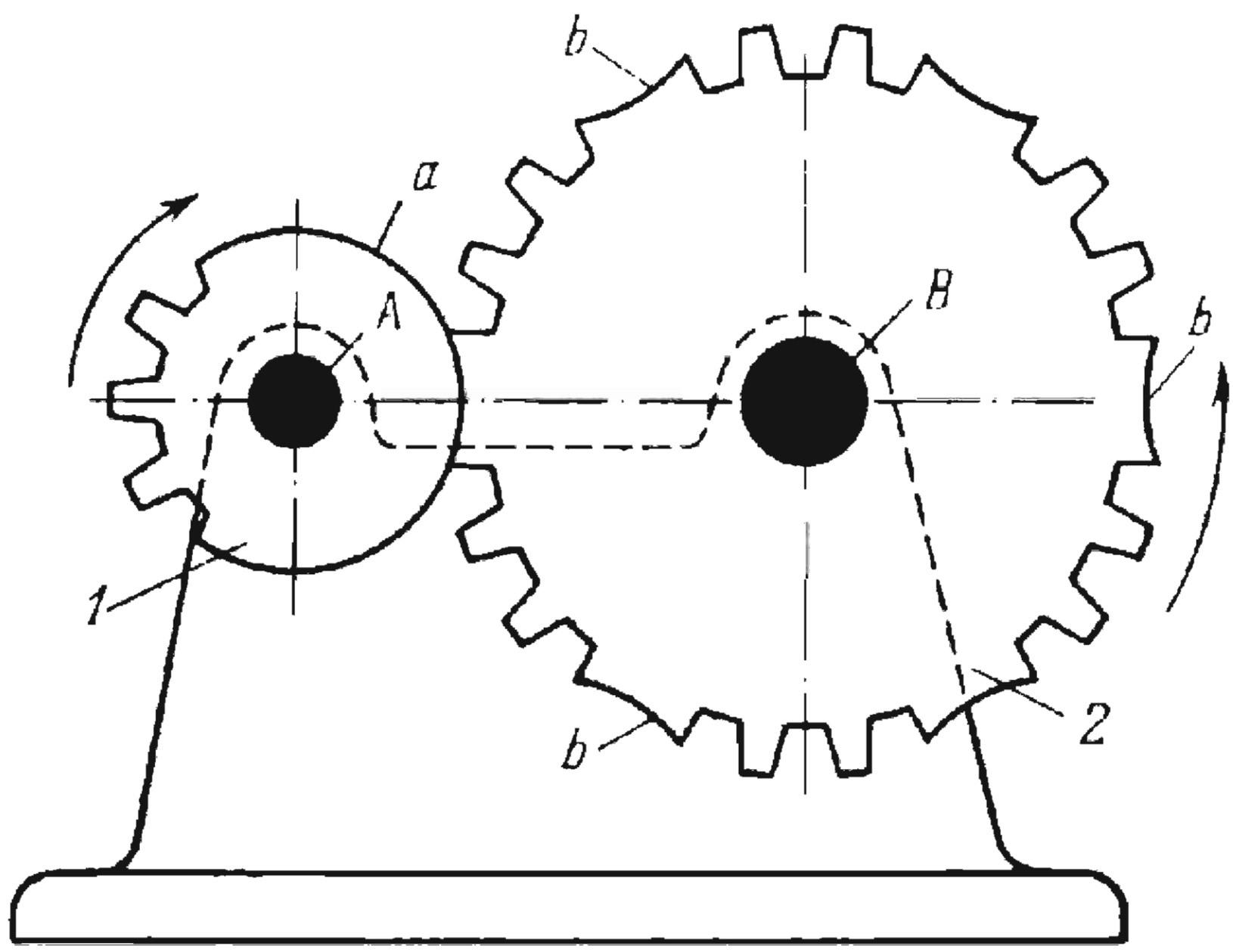

Gears *1* and *2* rotate about fixed axes *A* and *B*. When driving gear *1* rotates continuously clockwise, driven gear *2* rotates intermittently with dwells. Concentric locking surface *a* engages concave surfaces *b* to avoid unintentional rotation of gear *2* during its dwell periods. To each revolution of gear *1*, gear *2* turns through an angle equal to $\varphi = \frac{\pi}{3}$. Due to the symmetrical arrangement of the teeth and locking features on gear *2* it has uniform intermittent motion when gear *1* rotates at uniform velocity.

2379	THREE-LINK TOOTHED GEARING WITH VARIABLE INTERMITTENT MOTION OF THE DRIVEN LINK	SG D

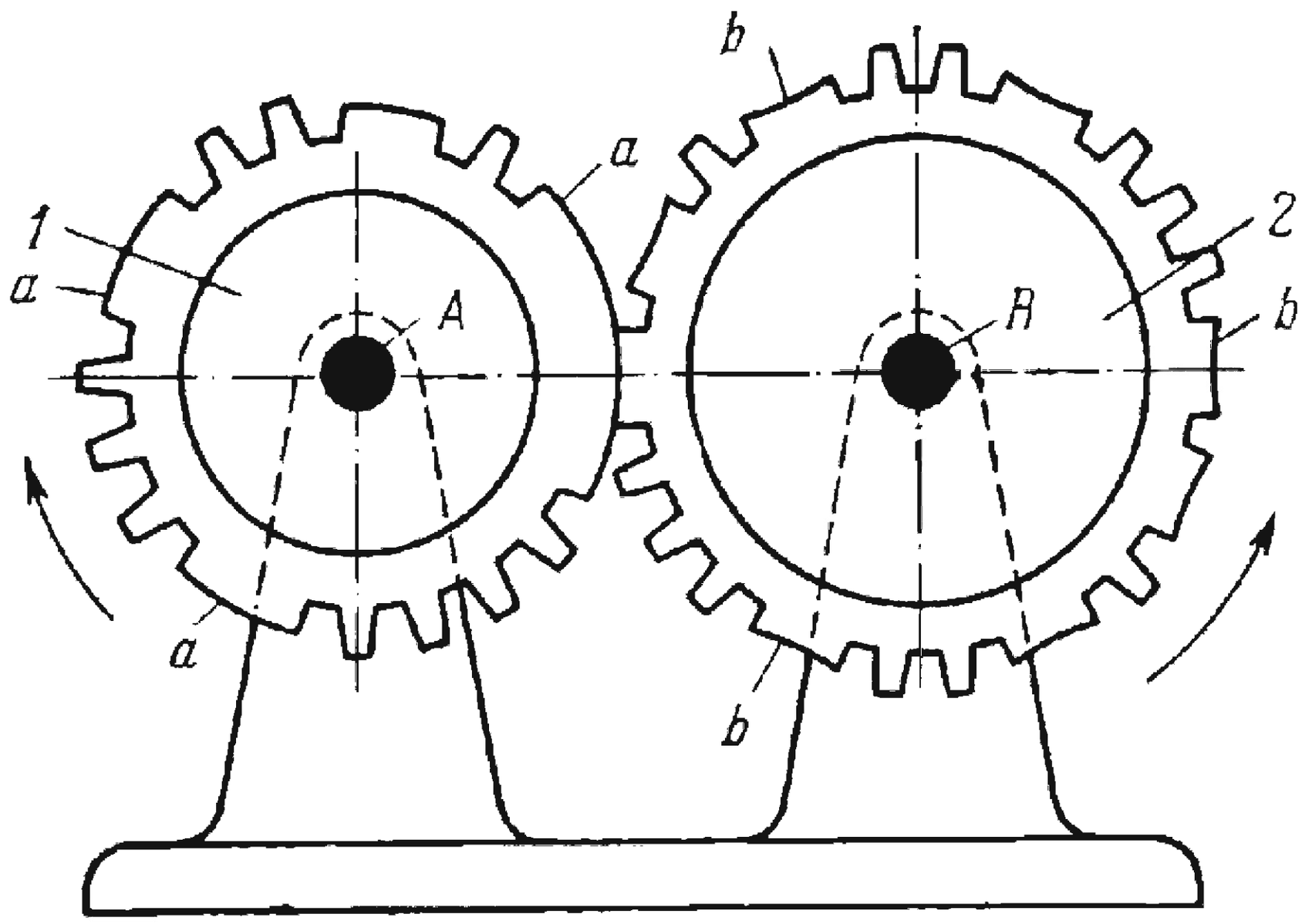

Gears *1* and *2* rotate about fixed axes *A* and *B*. When driving gear *1* rotates continuously clockwise, driven gear *2* rotates intermittently with dwells. Concentric locking surfaces *a* engage concave surfaces *b* to avoid unintentional rotation of gear *2* during its dwell periods. Due to the different numbers of teeth at various parts of gear *1* and different lengths of the various concentric surfaces *a*, as well as of the corresponding tooth spaces and concave surfaces *b* on gear *2*, the latter has nonuniform intermittent motion when gear *1* rotates at uniform velocity.

2380	THREE-LINK TOOTHED PLANETARY MECHANISM FOR TRACING EPICYCLOIDS	SG Ge

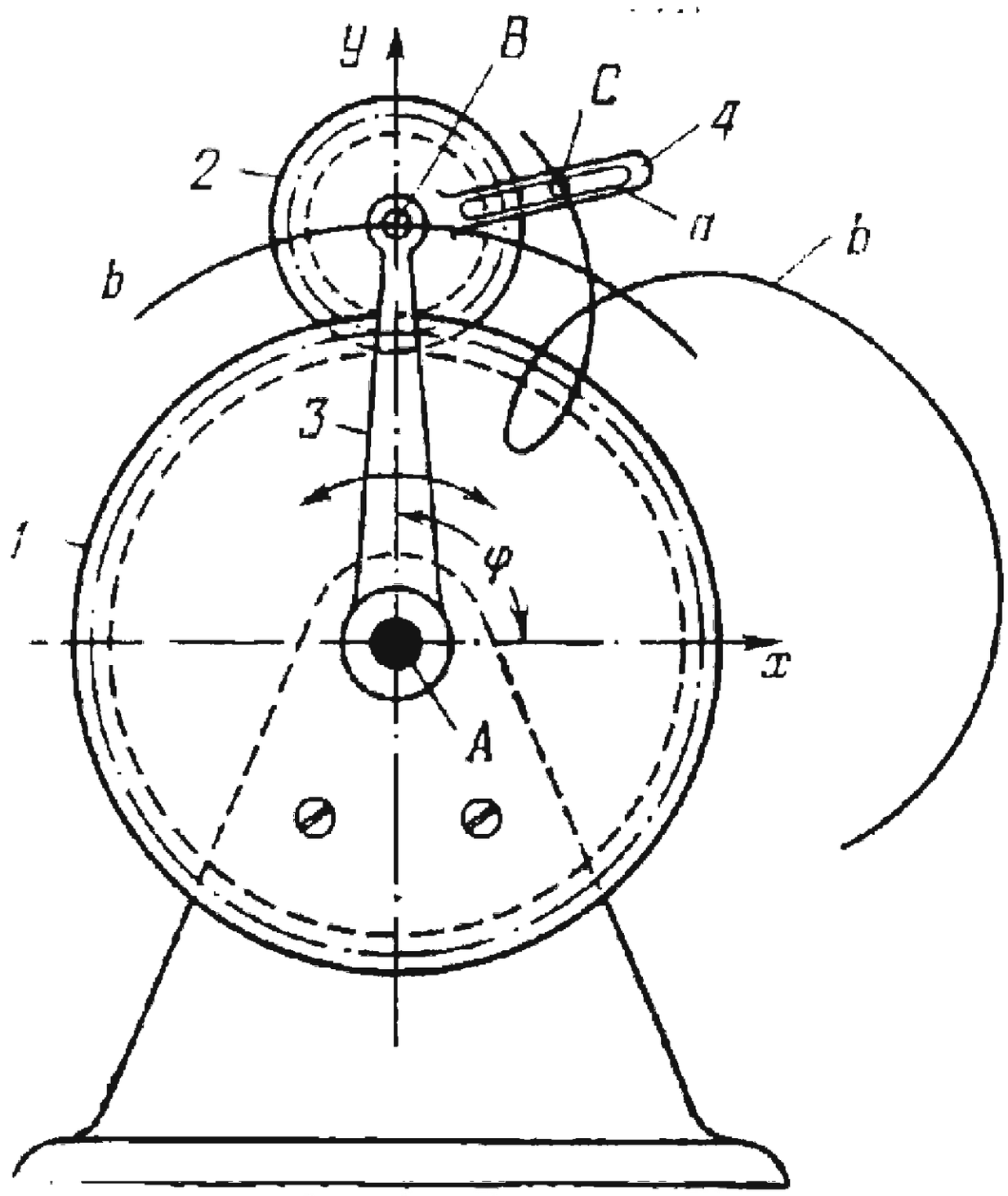

Carrier *3* rotates about fixed axis *A* and is connected by turning pair *B* to planet gear *2* which meshes with fixed sun gear *1*. Planet gear *2* has integral lever *4* with straight slot *a*. Adjustable along slot *a* is stylus *C* which can be secured at a variable distance $\overline{BC}$ from axis *B* and which describes epicycloid *b-b* with the equation

$$x=(R+r)\cos\varphi-\lambda r\cos\frac{R+r}{r}\varphi$$

$$y=(R+r)\sin\varphi-\lambda r\sin\frac{R+r}{R}\varphi$$

where R is the pitch radius of sun gear *1*, r is the pitch radius of planet gear *2*, $\lambda=\frac{\overline{BC}}{r}$, $\overline{BC}$ is the distance from axis *B* to tracing point *C*, and φ is the angle of rotation of carrier *3*. As shown, $\lambda=\frac{\overline{BC}}{r}>1$ and therefore curve *b-b* is a prolate epicycloid. At $\lambda=\frac{\overline{BC}}{r}<1$, point *C* describes a curtate epicycloid. If $\lambda=1$, then point *C* is on the pitch circle of planet gear *2* and describes an epicycloid. When $m=\frac{R}{r}$ is a whole number the epicycloid consists of m identical noncrossing branches. If m is fractional, the epicycloid crosses to form loops.

2381	THREE-LINK TOOTHED PLANETARY MECHANISM FOR TRACING ELLIPSES	SG Ge

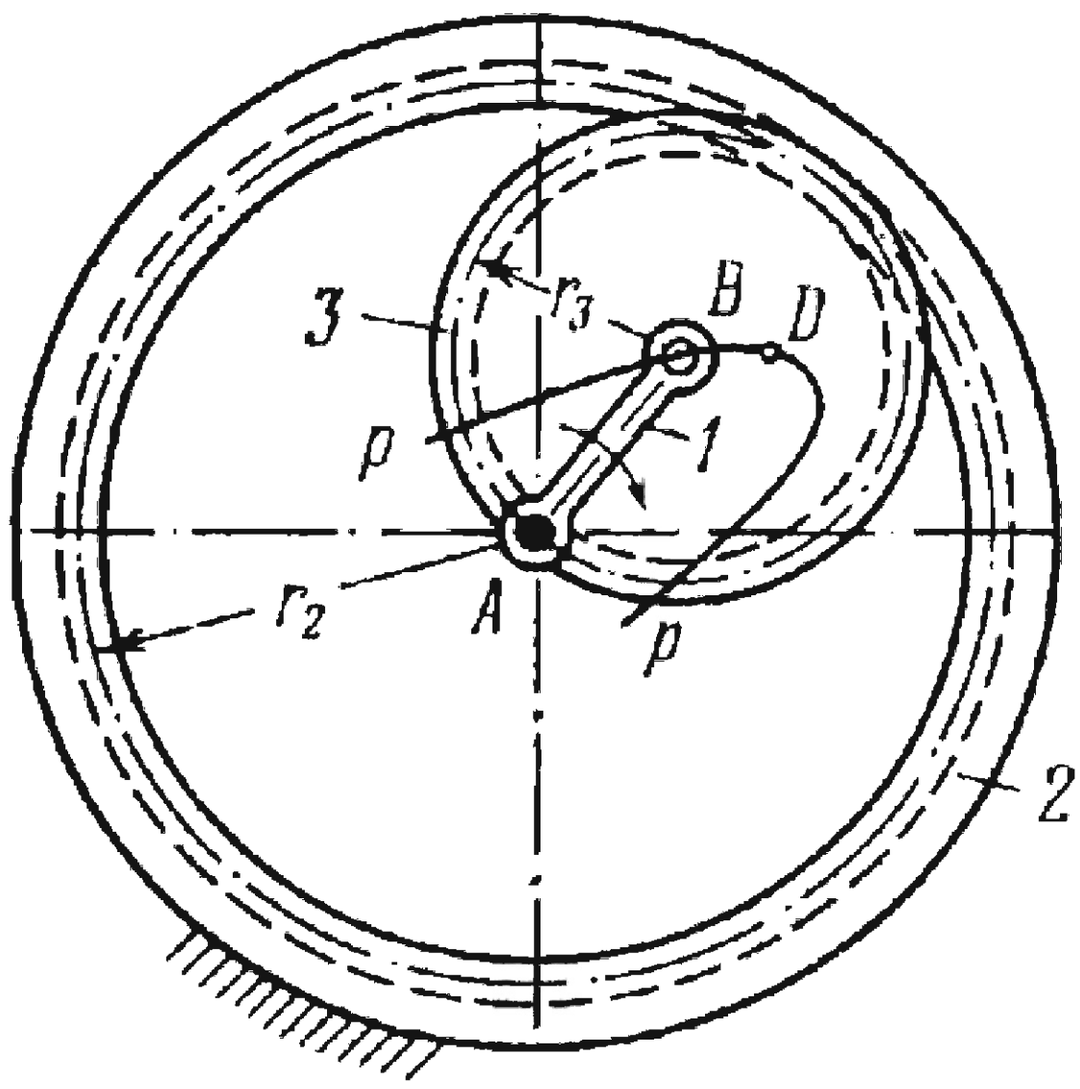

Carrier *1* rotates about fixed axis *A* and is connected by turning pair *B* to planet gear *3* which meshes with fixed internal sun gear *2*. The pitch radii of gears *2* and *3* comply with the condition: $r_2 = 2r_3$. When carrier *1* rotates about axis *A*, points on the pitch circle of gear *3* describe straight lines passing through point *A*. Any random point *D* on gear *3* describes an ellipse.

2382	THREE-LINK TOOTHED PLANETARY MECHANISM FOR TRACING CARDIOIDS	SG Ge

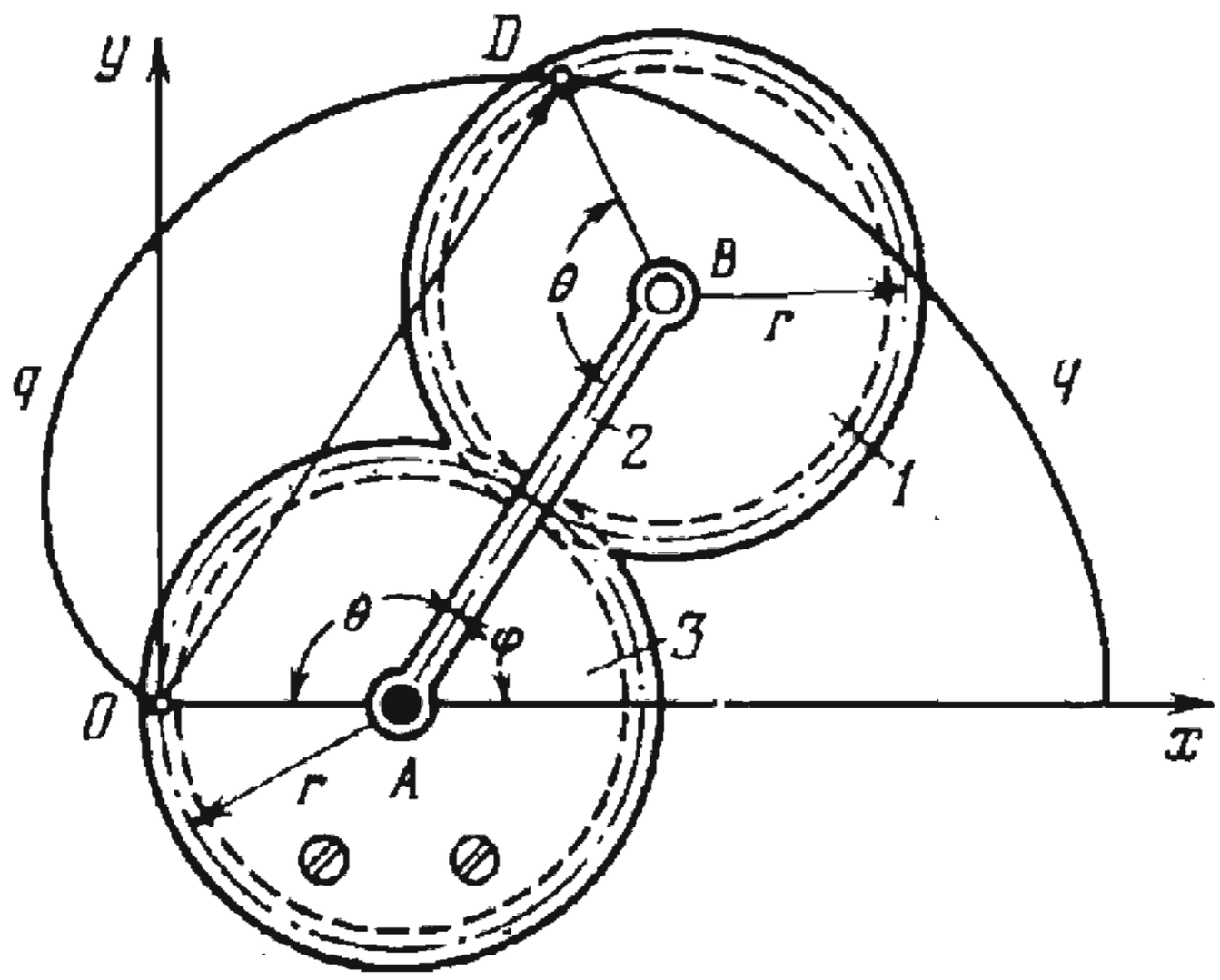

Gear *1* rolls around identical fixed gear *3*. Carrier *2* rotates about fixed axis *A*. Any random point *D* of gear *1* lying on its pitch circle describes cardioid *q-q* with the polar equation

$$\rho = 2r\,(1 + \cos\varphi)$$

where ρ is the radius vector of the cardioid, r is the pitch radius of gears *1* and *3*, and φ is the angle between axis Ox and axis AB of carrier *2*. In rectangular coordinates xOy, the equation of cardioid *q-q* has the form

$$(x^2 + y^2 - 2rx)^2 = 4r^2\,(x^2 + y^2).$$

2383	THREE-LINK TOOTHED PLANETARY MECHANISM FOR TRACING PROLATE CARDIOIDS	SG Ge

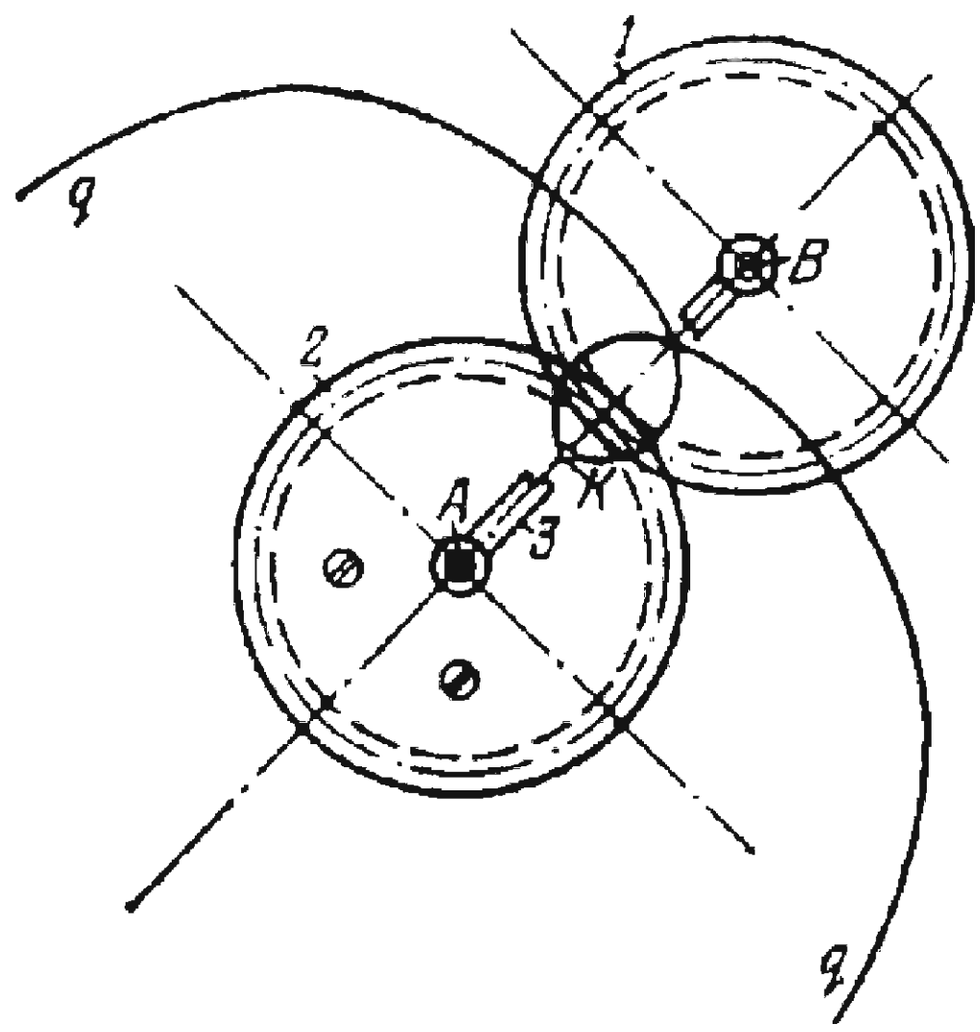

Carrier *3* rotates about fixed axis *A* and is connected by turning pair *B* to planet gear *1* which meshes with identical fixed sun gear *2*. When gear *1* rolls around gear *2*, any point *K*, attached to gear *1* and not lying on its pitch circle, describes prolate self-intersecting cardioid *q-q*.

2384	THREE-LINK TOOTHED MECHANISM FOR TRACING CYCLOIDS	SG Ge

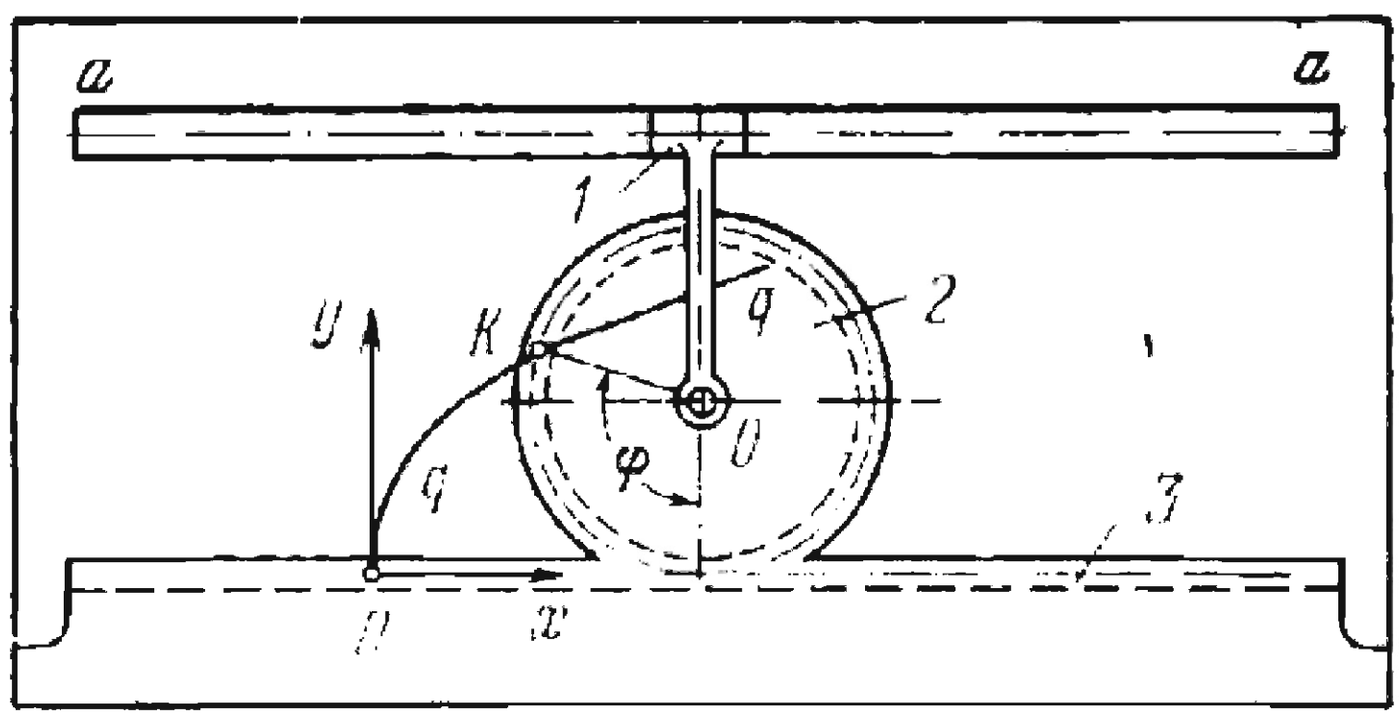

When slider *1* moves along fixed guides *a-a*, pinion *2* rolls along fixed straight rack *3*. Any point *K* of pinion *2* describes cycloid *q-q*. The parametric equations of the cycloid are

$$x = r\,(\varphi - \sin\varphi) \quad \text{and} \quad y = r\,(1 - \cos\varphi)$$

where $r = \overline{OK}$, and φ is the angle of rotation of pinion *2*. In rectangular coordinates *xOy*, the equation of cycloid *q-q* in the explicit form is

$$x = r \arccos \frac{r-y}{r} \pm \sqrt{(2r-y)\,y}.$$

2385	TOOTHED RACK-AND-GEAR STRIP FEED MECHANISM	SG SF

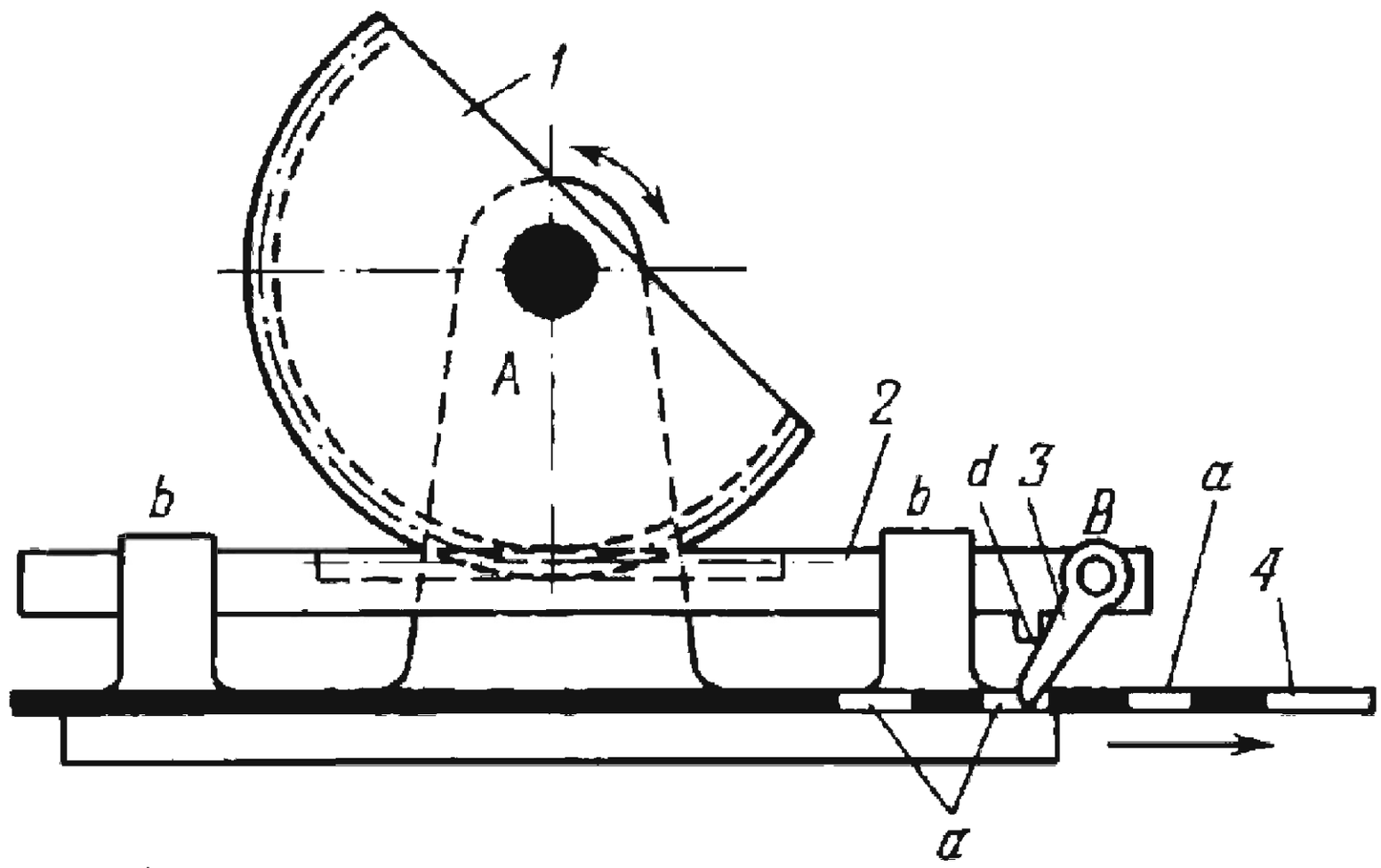

Segment gear *1* turns about fixed axis *A* and meshes with gear rack *2* which slides in fixed guides *b-b*. Pawl *3* turns freely about axis *B* which belongs to rack *2*. When segment gear *1* is turned counterclockwise, pawl *3* enters a hole *a* in strip *4* and, bearing against lug *d* of the rack, advances strip *4* to the right. When gear *1* is turned clockwise, pawl *3* slides along the strip.

2386	TOOTHED RACK-AND-PINION MECHANISM FOR FEEDING CYLINDRICAL PARTS	SG SF

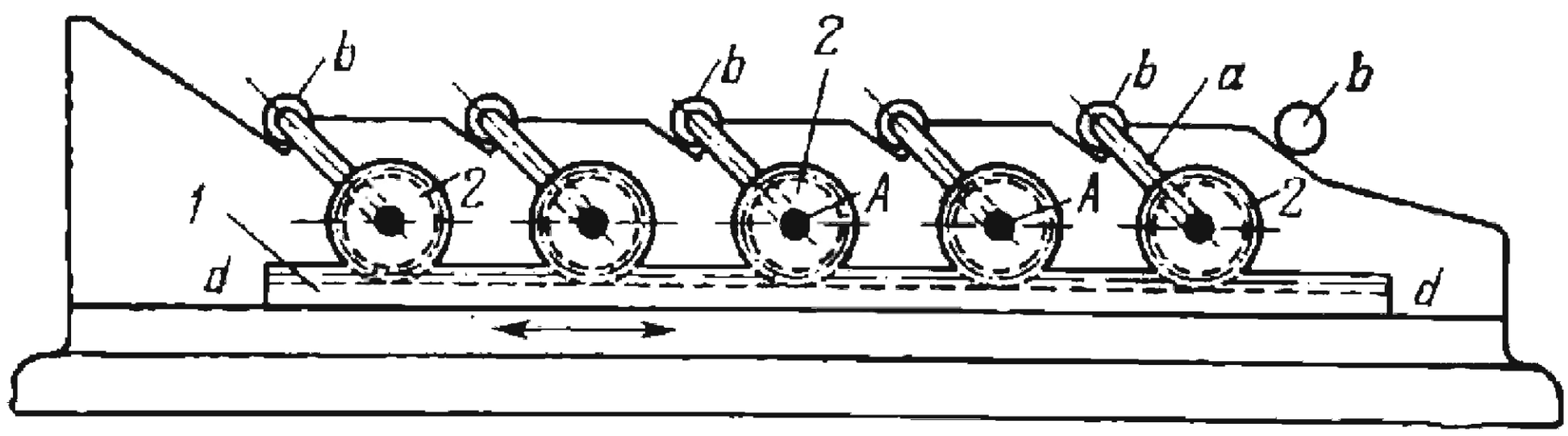

Gear rack *1* slides along fixed guides *d-d* and meshes with five identical pinions *2* that turn about fixed axes *A*. Levers *a*, rigidly attached to pinions *2*, grip parts *b* (by means of a device which is not shown) and carry them to the adjacent recesses.

2387	THREE-LINK BEVEL-GEAR SCREW-CONVEYER DRIVE	SG SF

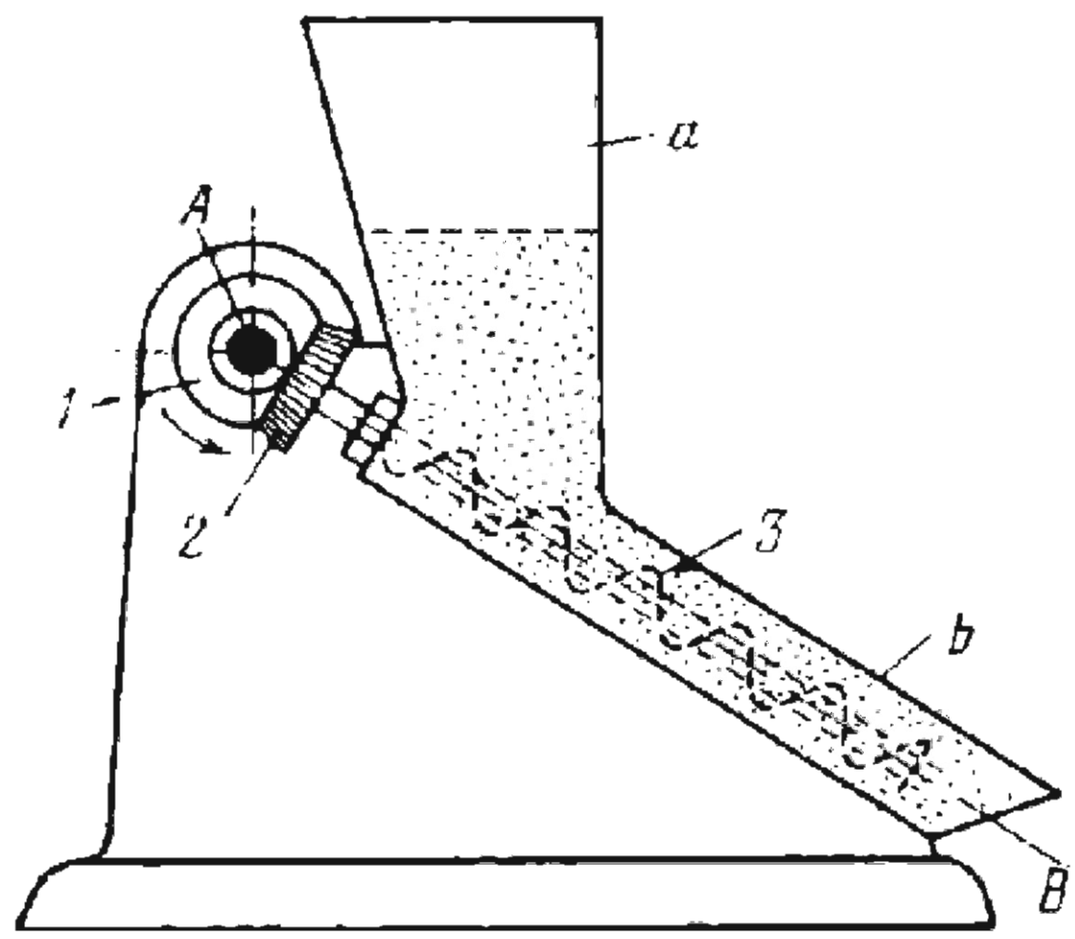

Bevel gears *1* and *2* rotate about fixed axes *A* and *B*. Rigidly attached to gear *2* is conveyer screw *3* which carries loose material from hopper *a* along pipe *b*.

2388	GEAR-AND-SCREW PLANETARY TOOLHEAD FEEDING MECHANISM	SG SF

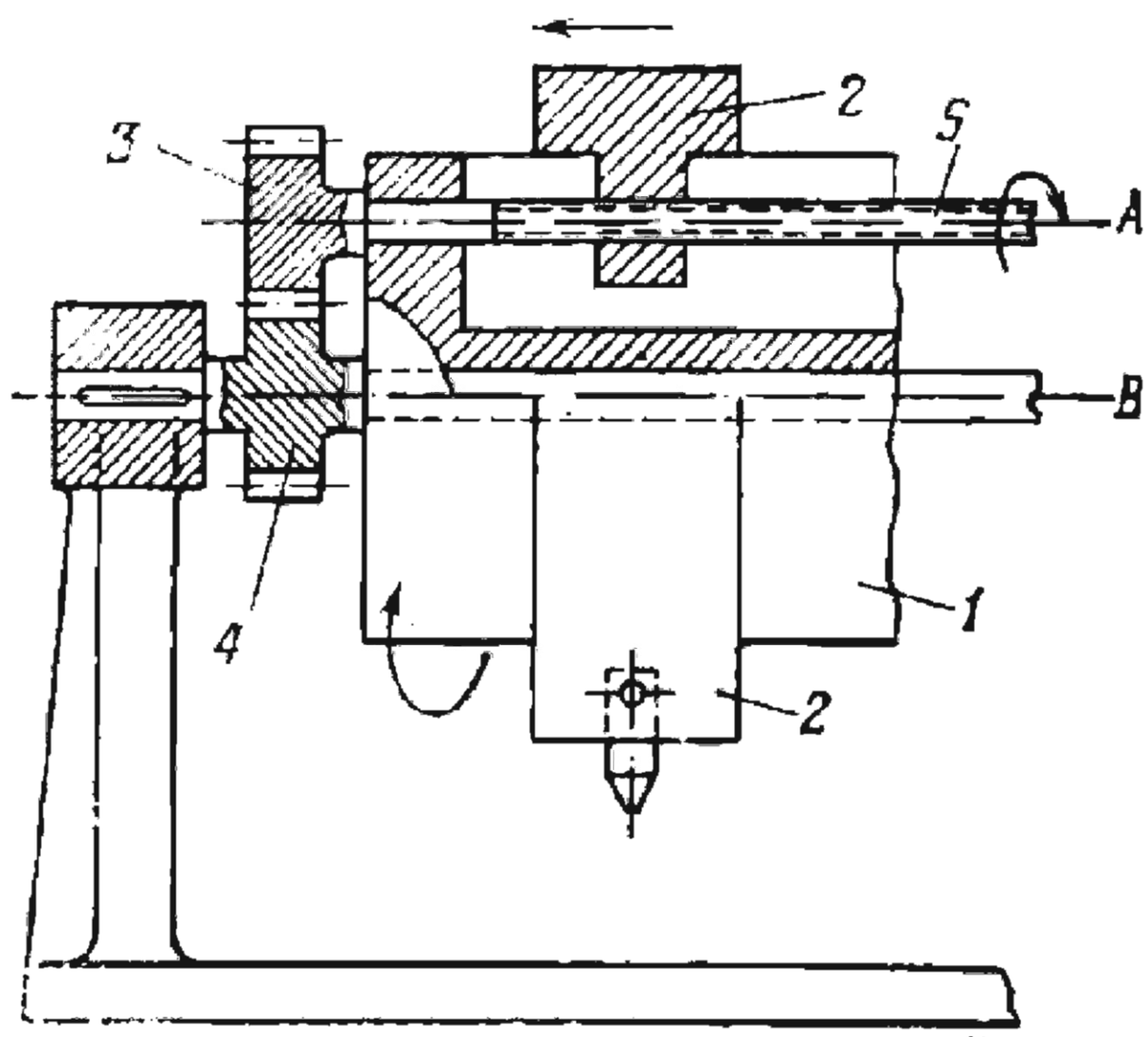

Gear *3* rolls around fixed gear *4*. Drum *1* rotates freely about fixed axis *B*. Rigidly attached to gear *3* is screw *5* which is connected by a screw pair to annular link *2* which slides along the outer surface of drum *1*. Link *2* is a toolhead which carries a clamped boring tool. When drum *1* rotates (main cutting motion), gear *3* rotates about axes *A* and *B*, and, by means of screw *5*, feeds toolhead *2* along drum *1*.

2389	BEVEL GEAR AUTOMATIC LOADING MECHANISM	SG SF

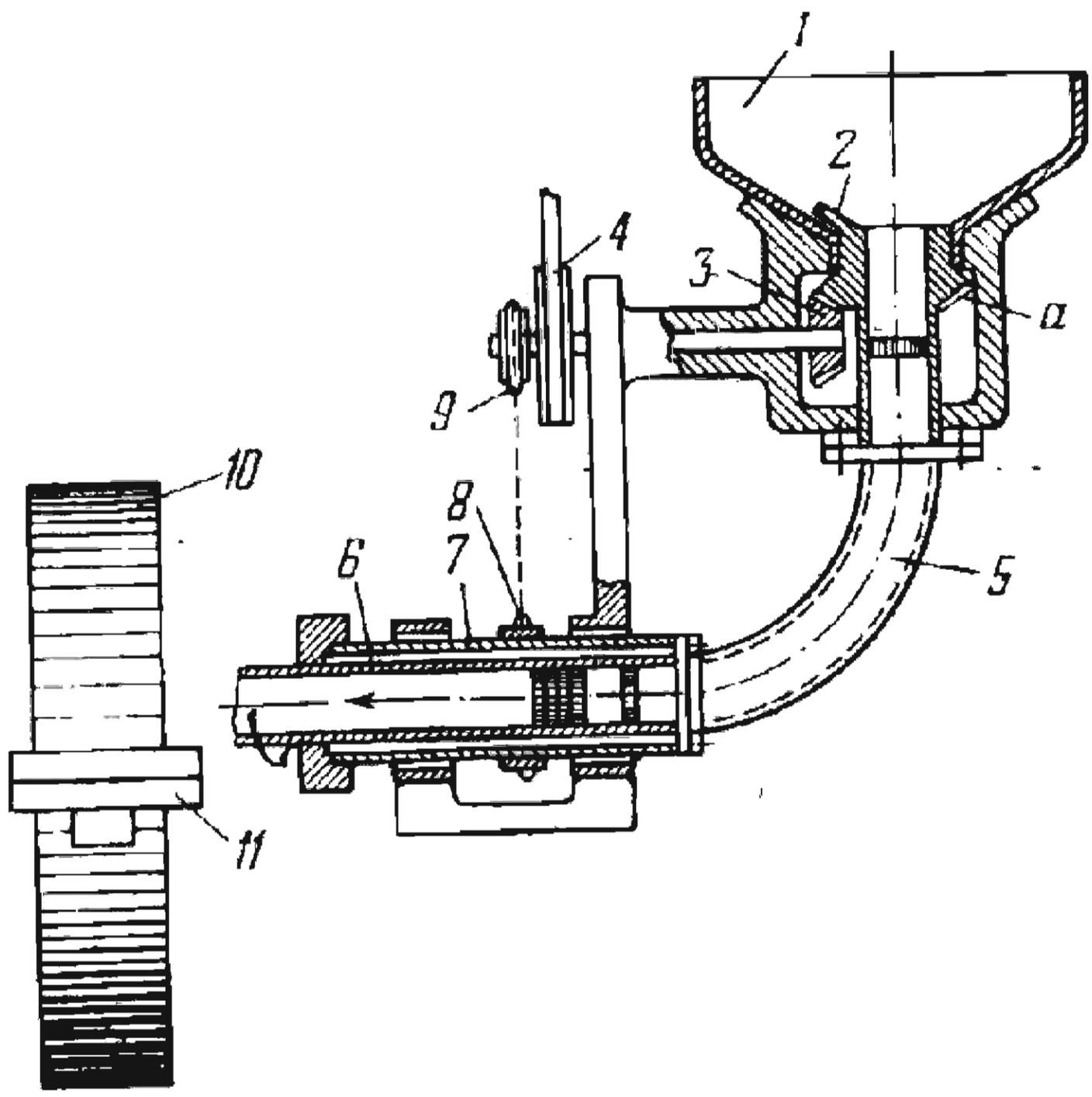

Rings which are to be ground in a centreless grinder are loaded into bunker *1* from where they slide down into sleeve *2* which is integral with bevel gear *a*. Bevel gear *a* meshes with bevel pinion *3*, powered by a motor through a belt drive to pulley *4*. One end of flexible tube *5* is secured to sleeve *2*, and the other end to horizontal tube *6* which is fitted into rotating sleeve *7*. Sleeve *7* is driven through sprockets *8* and *9* and a chain. The rotation of tube *6* feeds the rings onto work rest blade *11* for grinding with grinding wheel *10*.

2390	GEAR-AND-SCREW FEEDING MECHANISM	SG SF

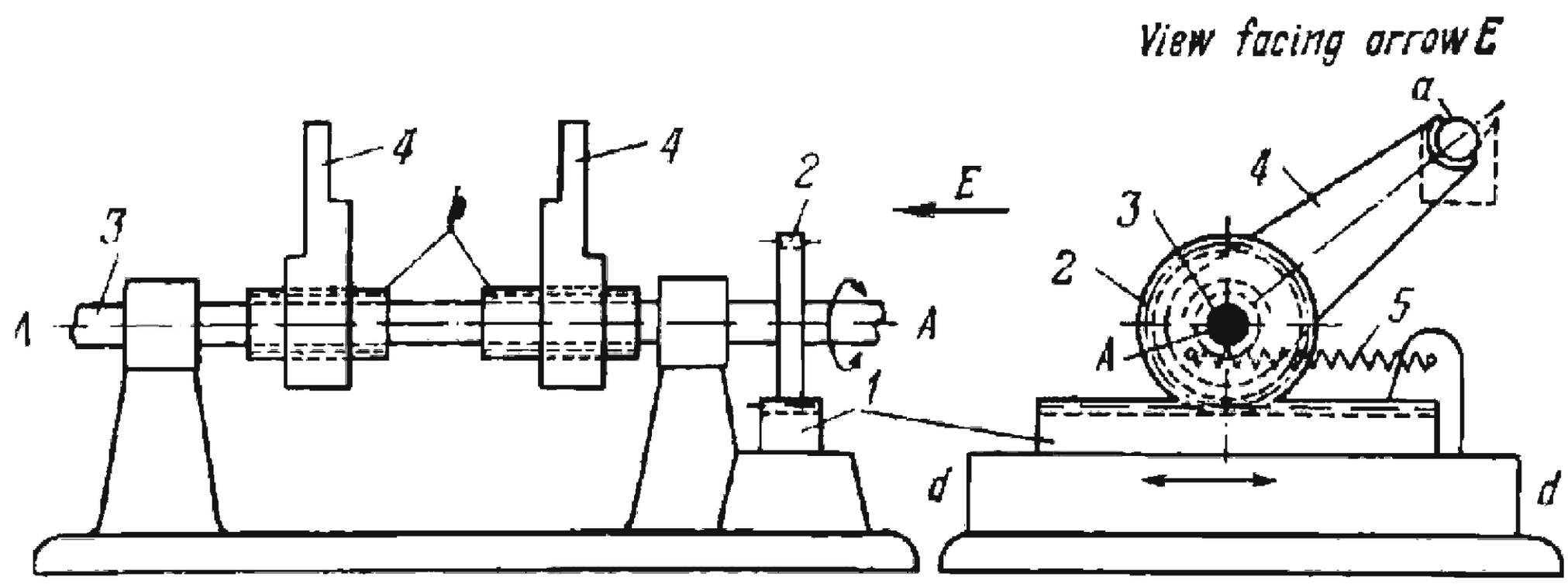

Driving gear rack *1* reciprocates along fixed guides *d-d* and meshes with gear *2* which rotates about fixed axis *A*. When gear *2*, keyed on shaft *3*, begins to rotate, grips *4*, held in their extreme left-hand position by springs *5*, approach each other and clamp workpiece *a*. Grips *4* are nuts screwed on right- and left-hand screw threads *b*. Screw threads *b* are integral with shaft *3*. When workpiece *a* is clamped, shaft *3* no longer rotates within grips *4*, and the latter, overcoming the tension of springs *5*, turn and carry the workpiece to its next station. When rack *1* travels in the reverse direction, screw threads *b* are screwed out of the nuts, grips *4* are spread apart and release workpiece *a*. Then springs *5* return grips *4* to their initial positions.

2391	THREE-LINK GEAR-TYPE FEEDING AND SHEARING MECHANISM	SG SF

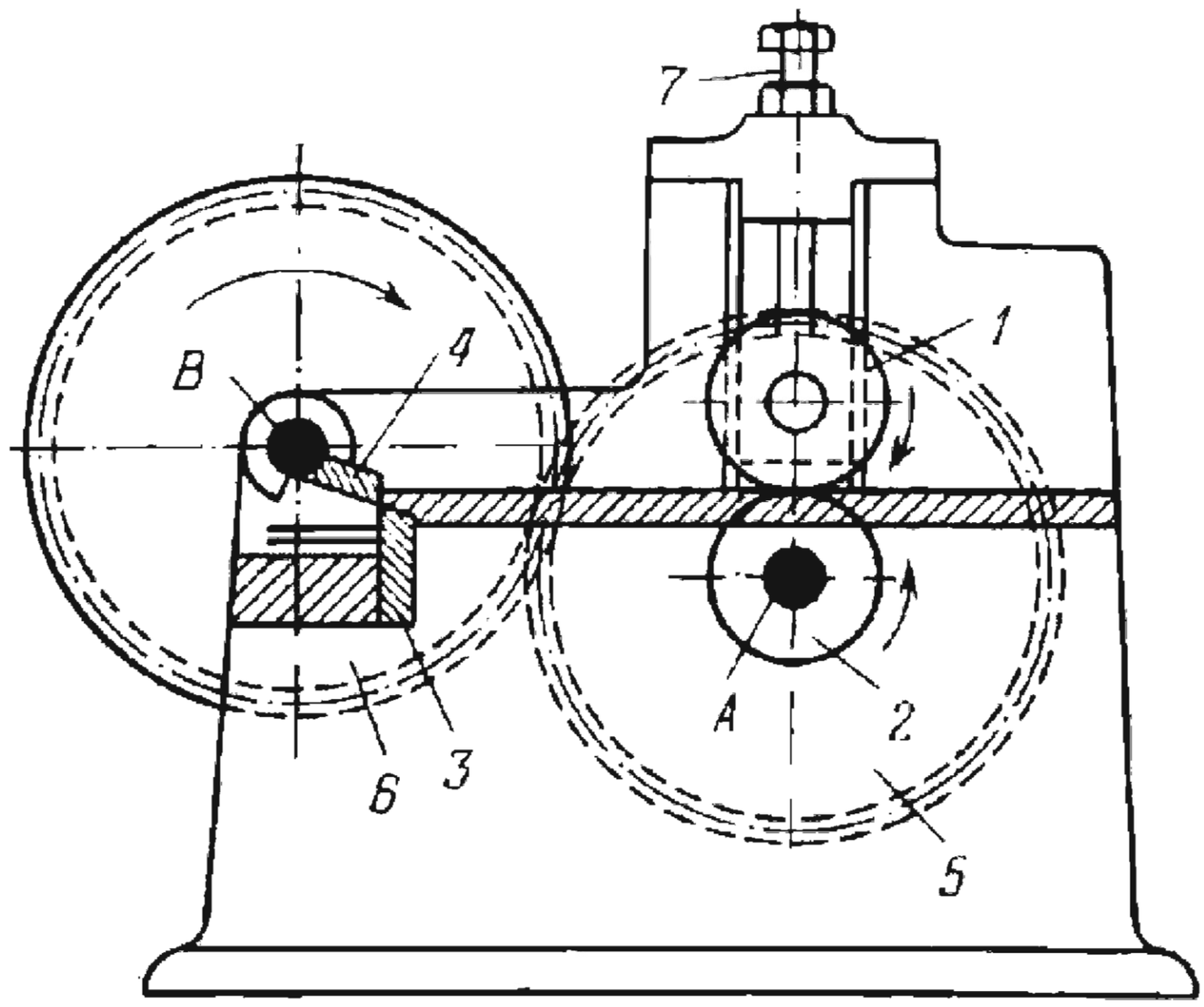

Gears *5* and *6* rotate about fixed axes *A* and *B*. Rolls *1* and *2* rotate in opposite directions and advance the sheet material to be sheared to fixed blade *3*. Top blade *4* is mounted on shaft *B* which is driven by shaft *A* through meshing gears *5* and *6*. When top blade *4* descends, the sheet stock is sheared. Roll *1* has a pressure device *7*

2392	VARIABLE-THROW CRANK WITH A TOOTHED LOCKING DEVICE	SG LL

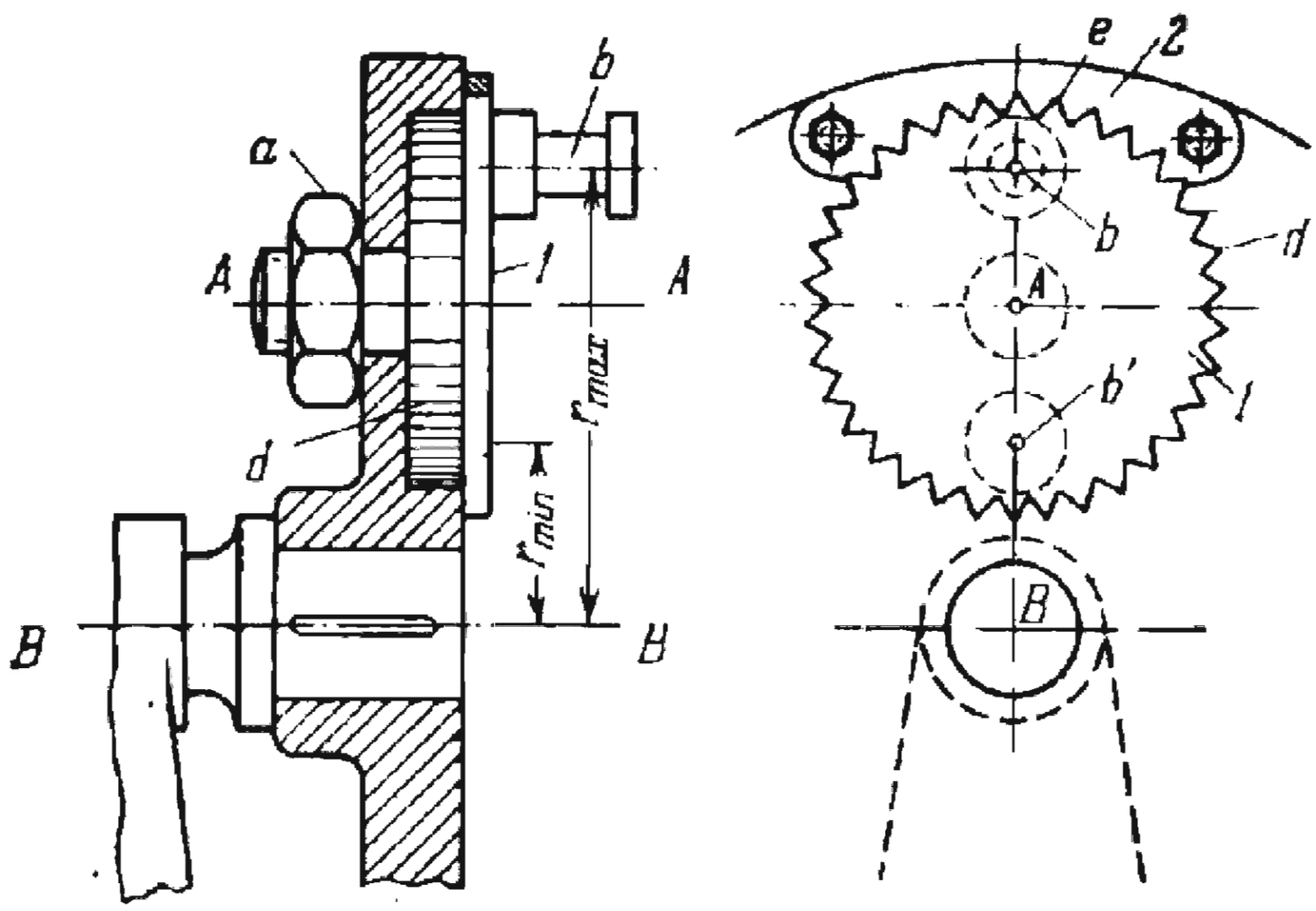

Crankpin *b* of crank *1* is rigidly attached to disk *d* which has serration-type (triangular) teeth around its circumference. The throw of crank *1* can be varied within the limits from $r_{min} = \overline{Bb'}$ to $r_{max} = \overline{Bb}$ by turning disk *d* about axis *A*. Disk *d* can be locked in the required position by link *2* which has internal teeth *e*. Disk *d* is clamped by nut *a*.

2393	GEAR-AND-WEDGE DIFFERENTIAL MECHANISM FOR CHANGING THE ECCENTRICITY	SG LL

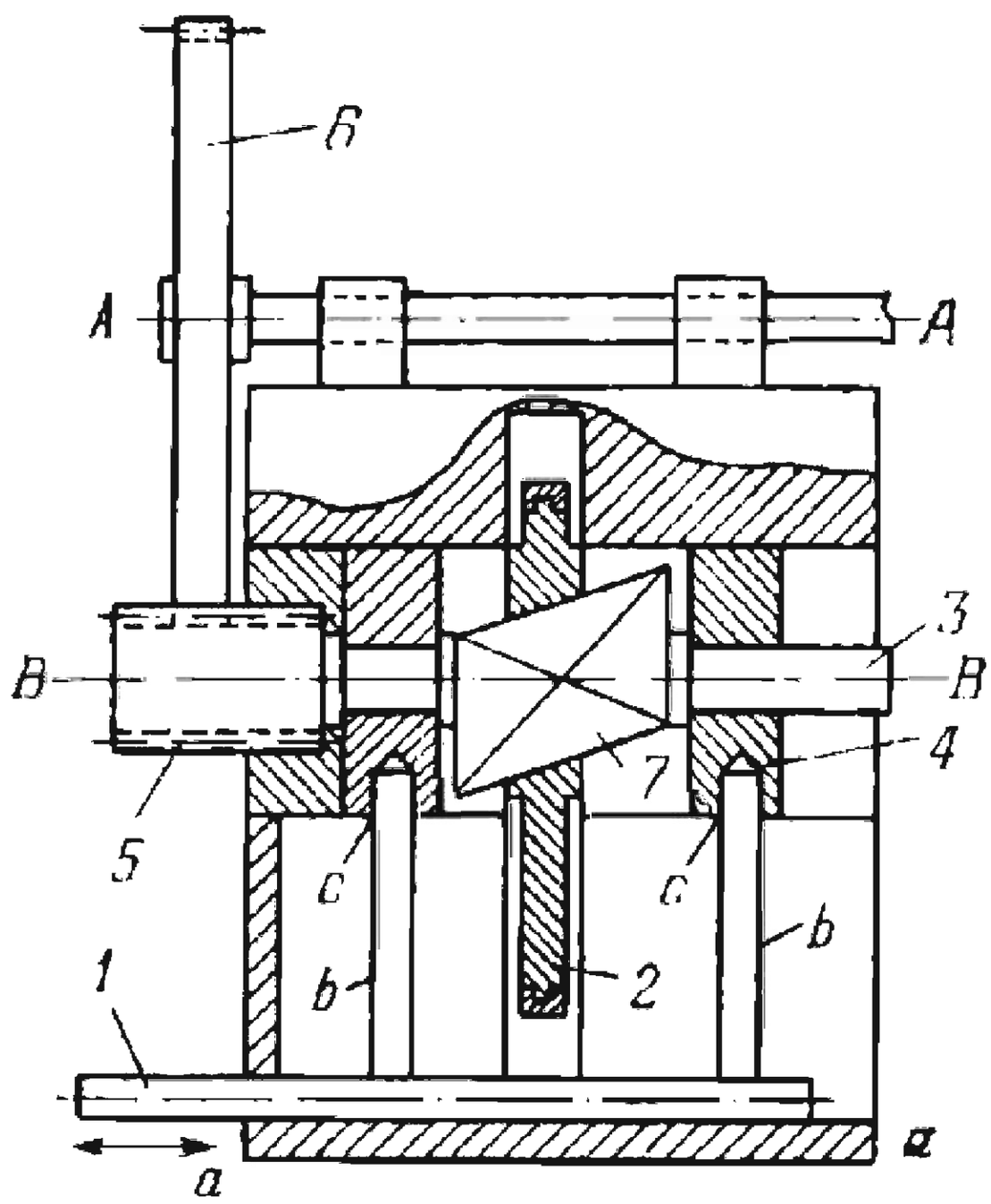

Link *1* slides along fixed guides *a-a* and has pins *b* which enter holes *c* of inserts *4*. Rotating in inserts *4* is shaft *3* which is rigidly attached to (or integral with) wedge *7* and wide-face gear *5*. Round cylindrical link *2* is connected by a sliding pair to wedge *7*. When gear *6* rotates about fixed axis *A-A*, gear *5* rotates with shaft *3* about axis *B-B*. The eccentricity of link *2* can be changed by shifting link *1* along guides *a-a* and clamping it in the required position. The eccentricity can be changed while shaft *3* is in operation.

2394	DOUBLE GEAR FOR ELIMINATING BACKLASH IN TOOTHED GEARING	SG LL

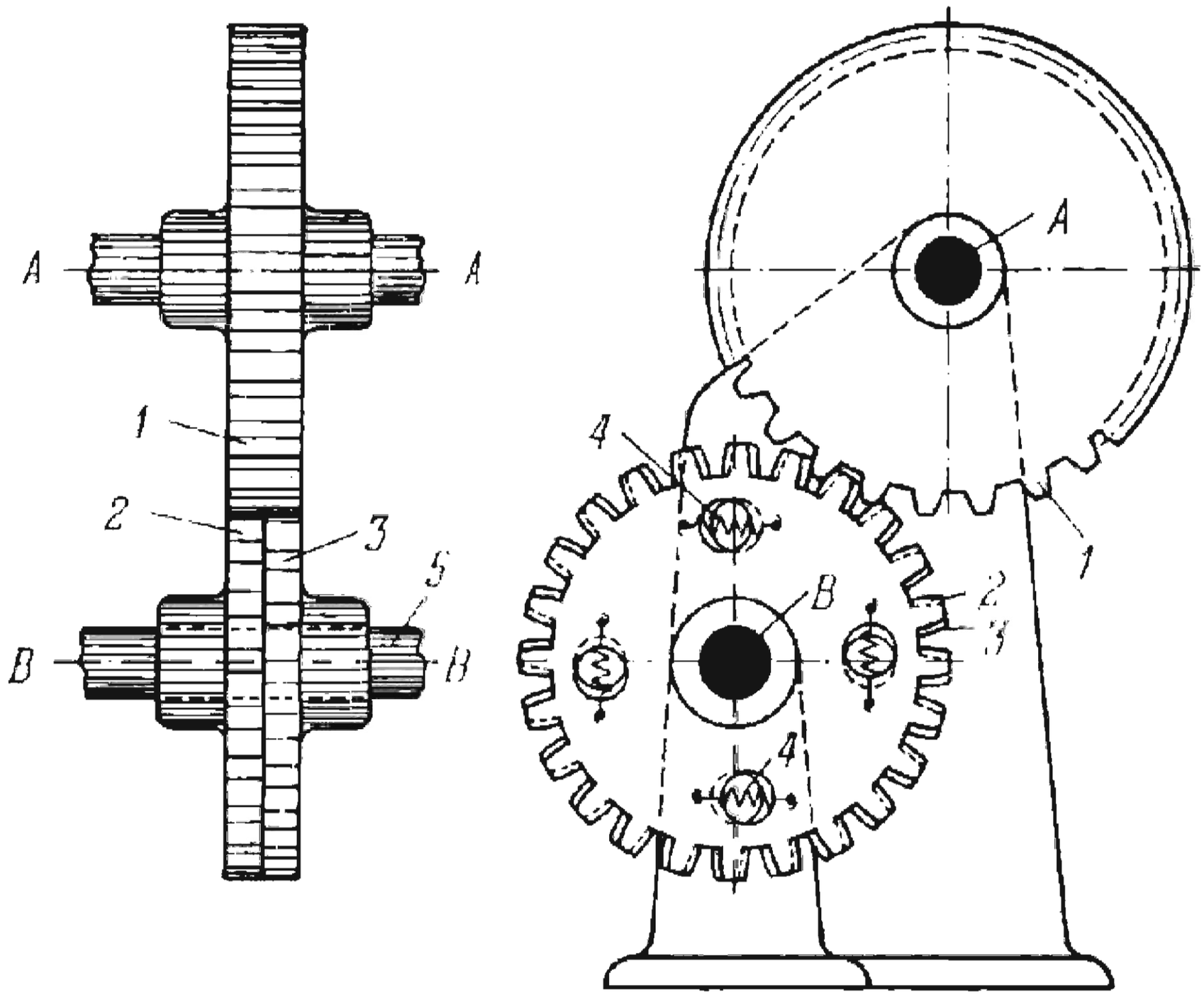

Driving gear *1* rotates about fixed axis *A* and meshes with both driven gears *2* and *3*. Two identical gears *2* and *3* rotate about fixed axis *B*. Gear *2* is rigidly attached to (keyed on) shaft *5*; gear *3* turns freely on this shaft. Gears *2* and *3* are connected together by springs *4*. These springs shift gear *3* with respect to gear *2*, thereby filling the tooth spaces of gear *1* and eliminating backlash in the gearing.

2395	TOOTHED OVERLOAD RELEASE MECHANISM OF A FLEXIBLE COUPLING	SG C

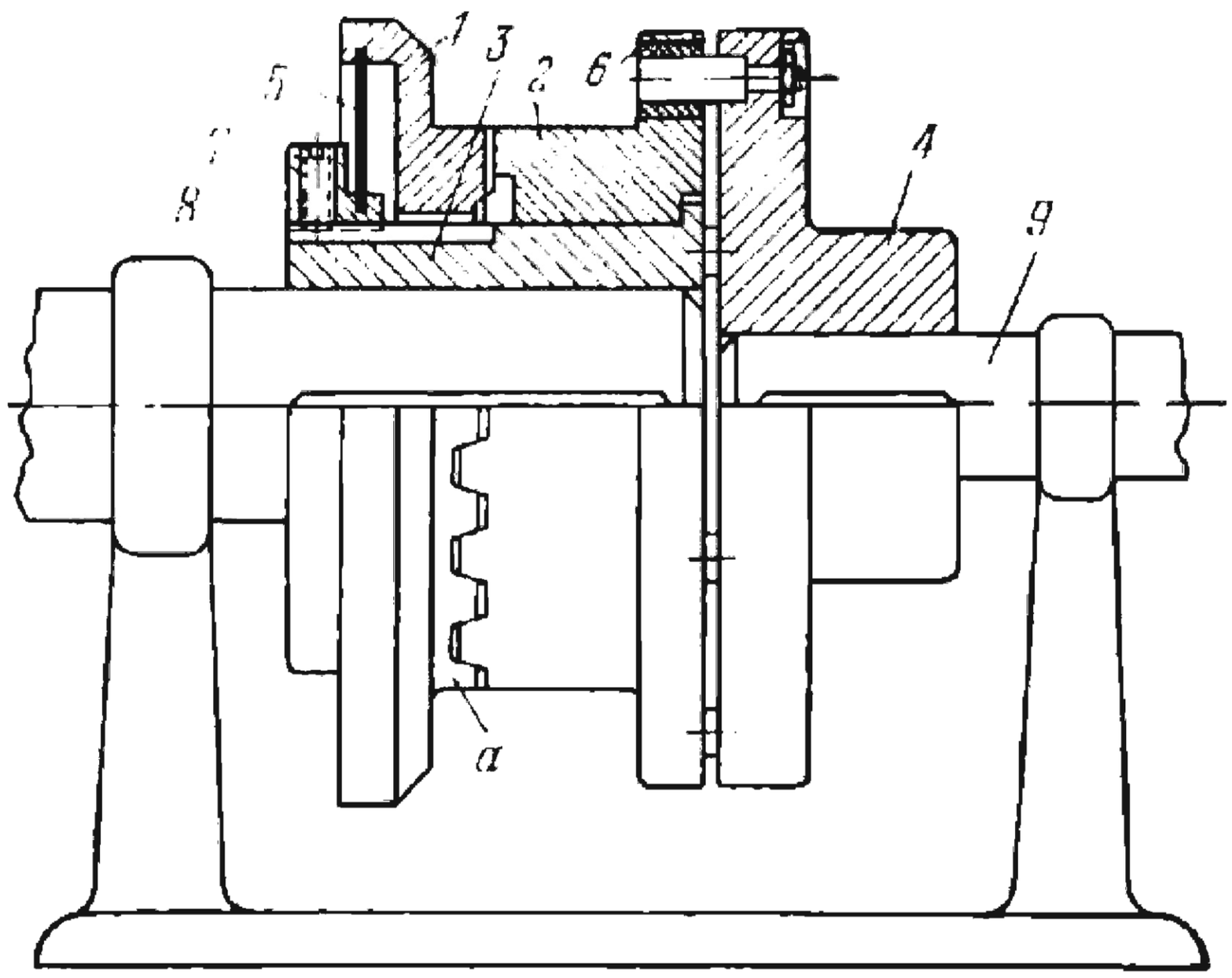

Rotation is transmitted from shaft *8* through spline sleeve *3* to flange *1* which has clutch teeth *a* on its end face. By means of these teeth rotation is further transmitted to flange *2*, having a series of holes around its circumference into which rubber bushings *6* have been inserted. Flange *4* is keyed on driven shaft *9* and has pins which enter rubber bushings *6*. When the transmitted torque exceeds a preset value, flanges *1* and *2* are forced out of engagement so that flange *1* slides along the splines of sleeve *3* to the left, bending flexible disk *5*. The maximum torque to be transmitted can be varied by adjusting circular nut *7* axially.

2396	TOOTHED REVERSING CLUTCH FOR BEVEL GEARING	SG C

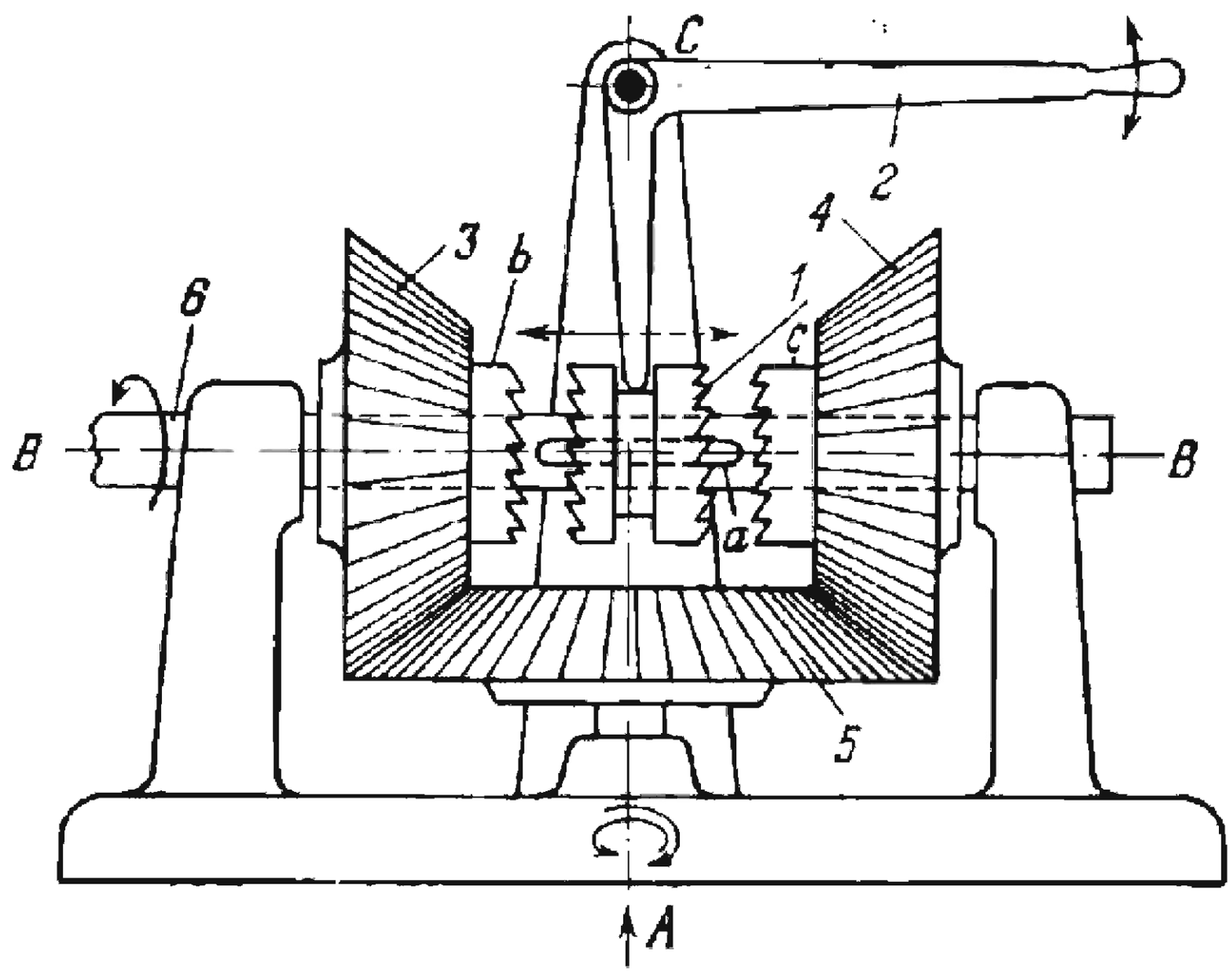

Shaft *6* rotates about fixed axis *B*. Bevel gear *5* rotates about fixed axis *A*. Double toothed-clutch member *1* slides along key *a* of shaft *6* and can engage clutch element *b* or *c* of bevel gear *3* or *4* which is freely mounted on shaft *6*. By turning lever *2* about fixed axis *C*, either the right- or left-hand end of clutch member *1* can be brought into engagement with clutch element *c* or *b*, reversing the direction of rotation of gear *5*.

2397	RACK-AND-PINION INDEXING DEVICE	SG I

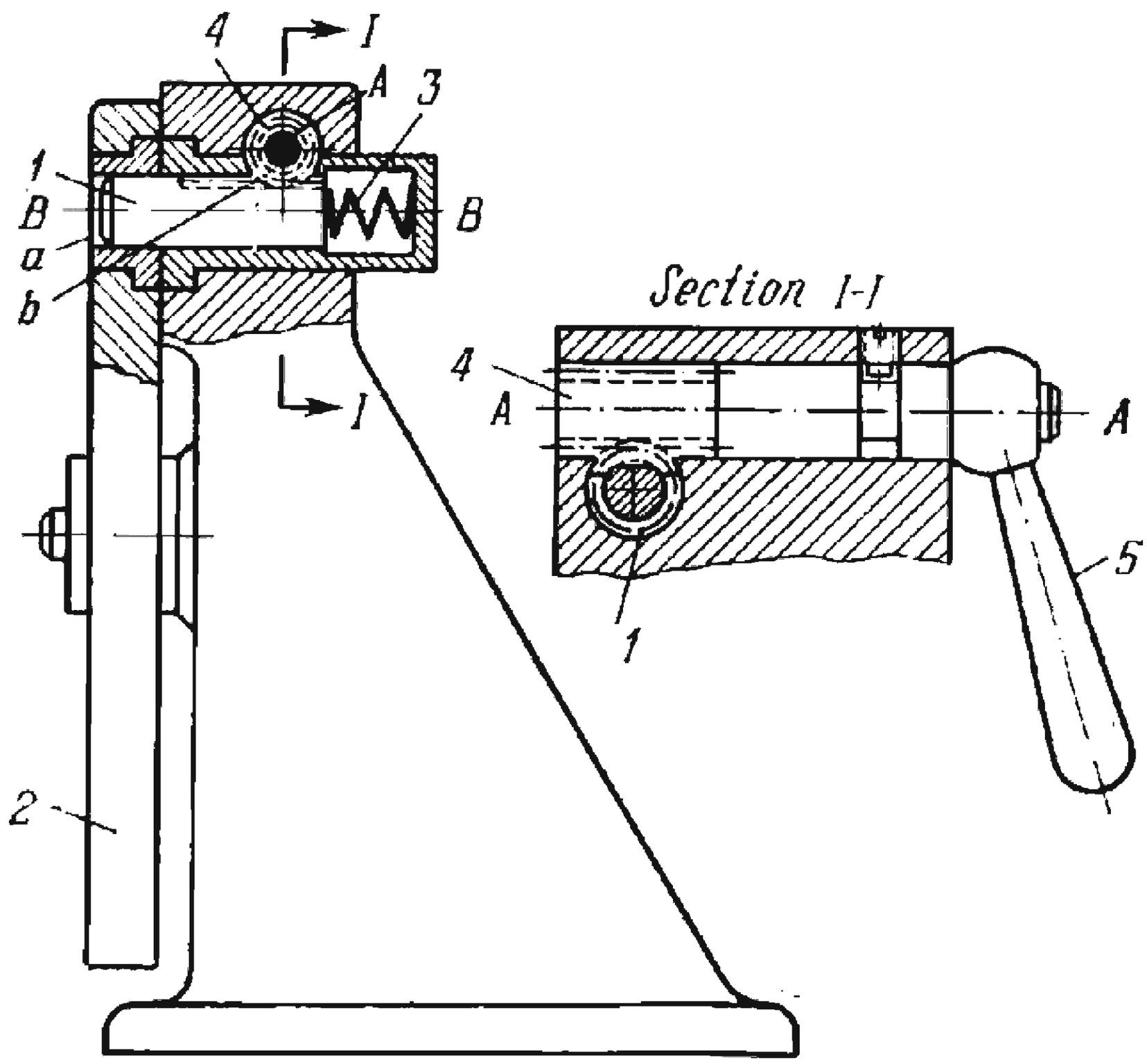

Pinion *4* and handle *5*, rigidly attached together, rotate about fixed axis *A*. Indexing plunger *1* slides along axis *B* and has integral gear rack *b* meshing with pinion *4*. Disk *2* is locked in its indexed positions when plunger *1* enters a hole *a* of the disk due to the action of spring *3*. Plunger *1* is withdrawn from hole *a* to release disk *2* by turning pinion *4* with handle *5*.

2398	RACK-AND-PINION CLAMPING DEVICE	SG GC

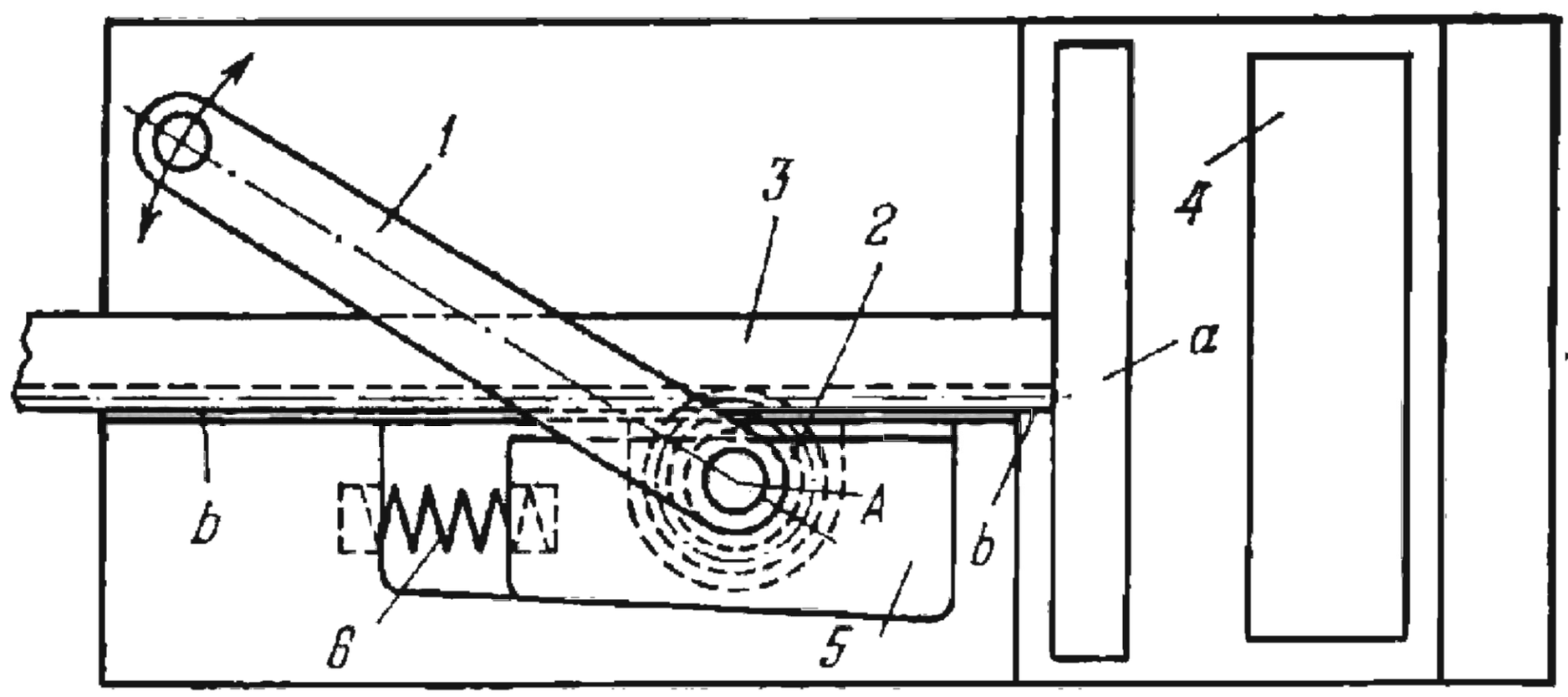

Crank *1* and pinion *2* rotate about axis *A* of link *5*. Gear rack *3* slides along fixed guides *b-b*. When crank *1*, rigidly attached to pinion *2*, is turned clockwise, rack *3* is advanced to the right and its element *a* clamps workpiece *4*. This stops further motion of rack *3* and the effort applied to crank *1* shifts link *5* to the left, compressing spring *6*. Due to its wedge shape, link *5* jams rack *3*, locking it in the clamped position. When crank *1* is turned counterclockwise, link *5* is shifted to the right, rack *3* to the left and workpiece *4* is released.

2399	RACK-AND-PINION JACK WITH A RATCHET PAWL	SG MH

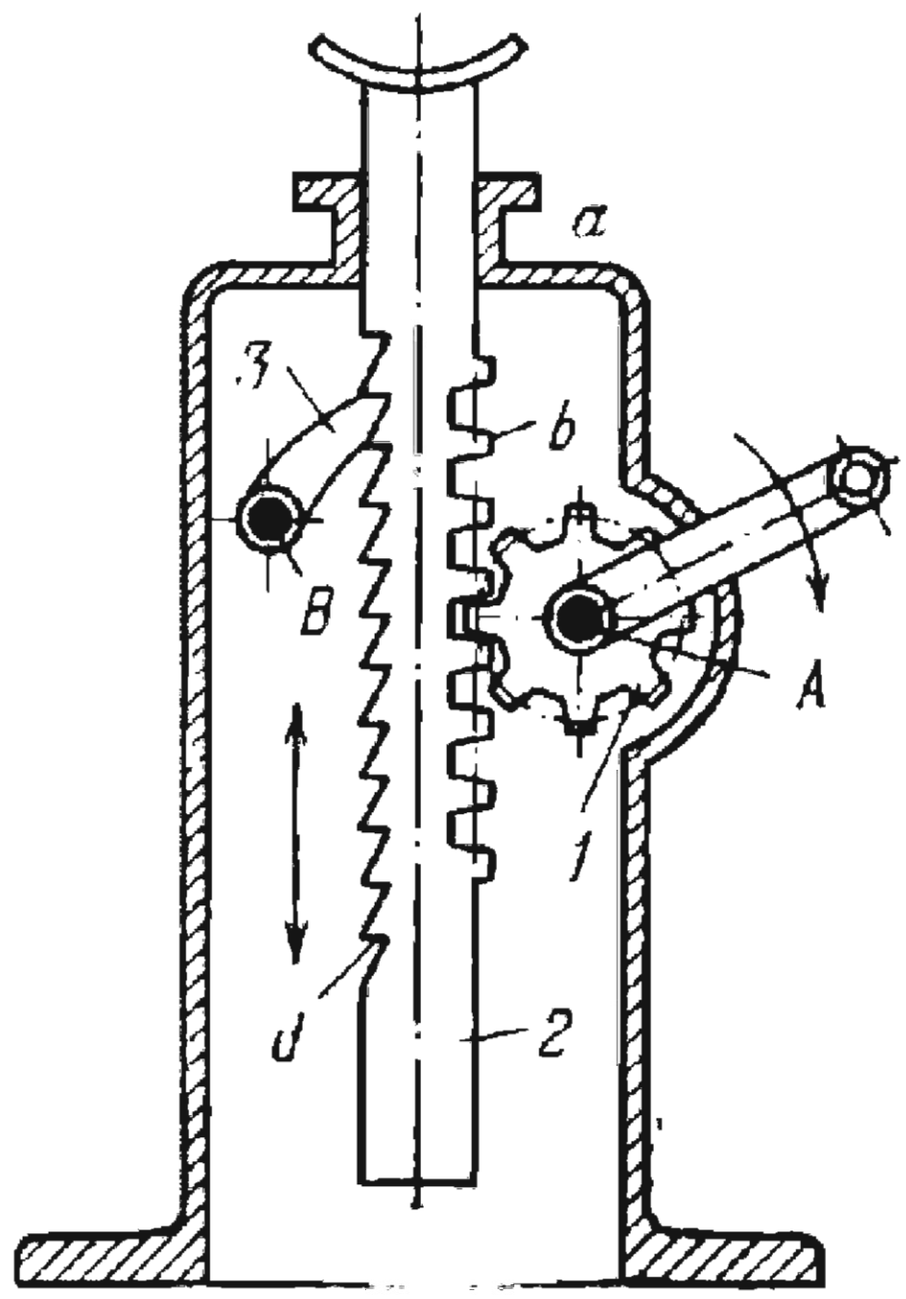

Pinion *1* rotates about fixed axis *A* and meshes with rack teeth *b* on the right-hand side of link *2* which slides vertically in guide *a*. When pinion *1* is rotated clockwise, link *2* is raised. Link *2* is held in the raised position by pawl *3* which turns about fixed axis *B* and engages ratchet teeth *d* on the left-hand side of link *2*.

2400	THREE-LINK PLANETARY TOOTHED STOP DEVICE FOR WATCHES	SG FD

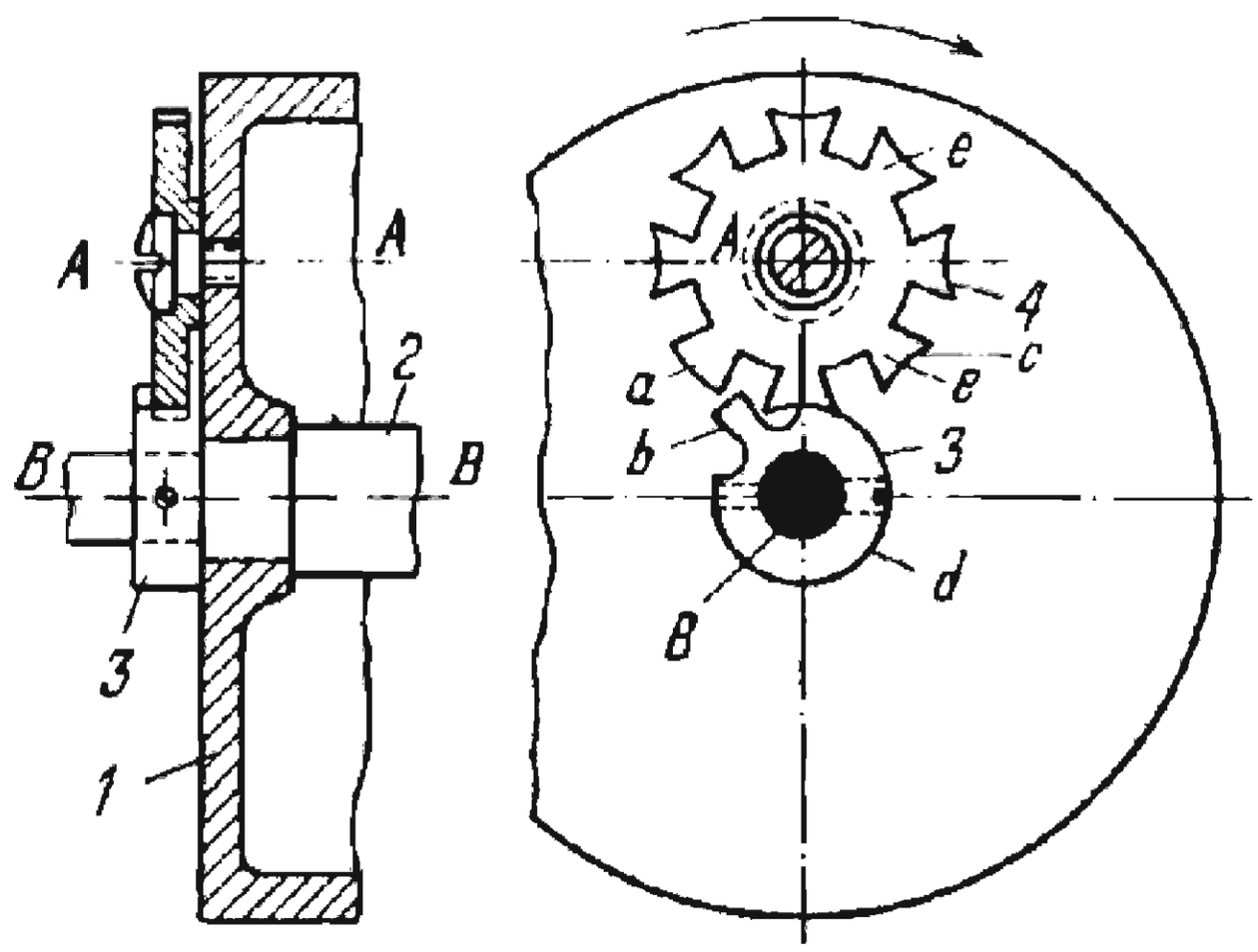

Link *1* rotates about fixed axis *B-B* of shaft *2*. Gear *3* has one tooth *b* and is rigidly attached to shaft *2*. Gear *4*, having seven teeth *e* and a lug *a*, rotates about axis *A-A* of link *1*. When link *1* is rotated clockwise, concave surface *c* of tooth *e* slides along concentric surface *d* of gear *3* and gear *4* does not rotate about axis *A-A*. When a tooth *e* of gear *4* engages tooth *b* of gear *3*, gear *4* turns through an angle about axis *A-A*. After seven revolutions of link *1*, lug *a* of gear *4* runs against tooth *b* of gear *3* and stops the mechanism. The driving element can be either link *1* or shaft *2*. This device is employed as a stop in watch mechanisms to limit the winding of the spring.

2401	BEVEL GEAR AXIAL MOTION MECHANISM OF INKING CYLINDERS IN PLATEN PRINTING PRESSES	SG FD

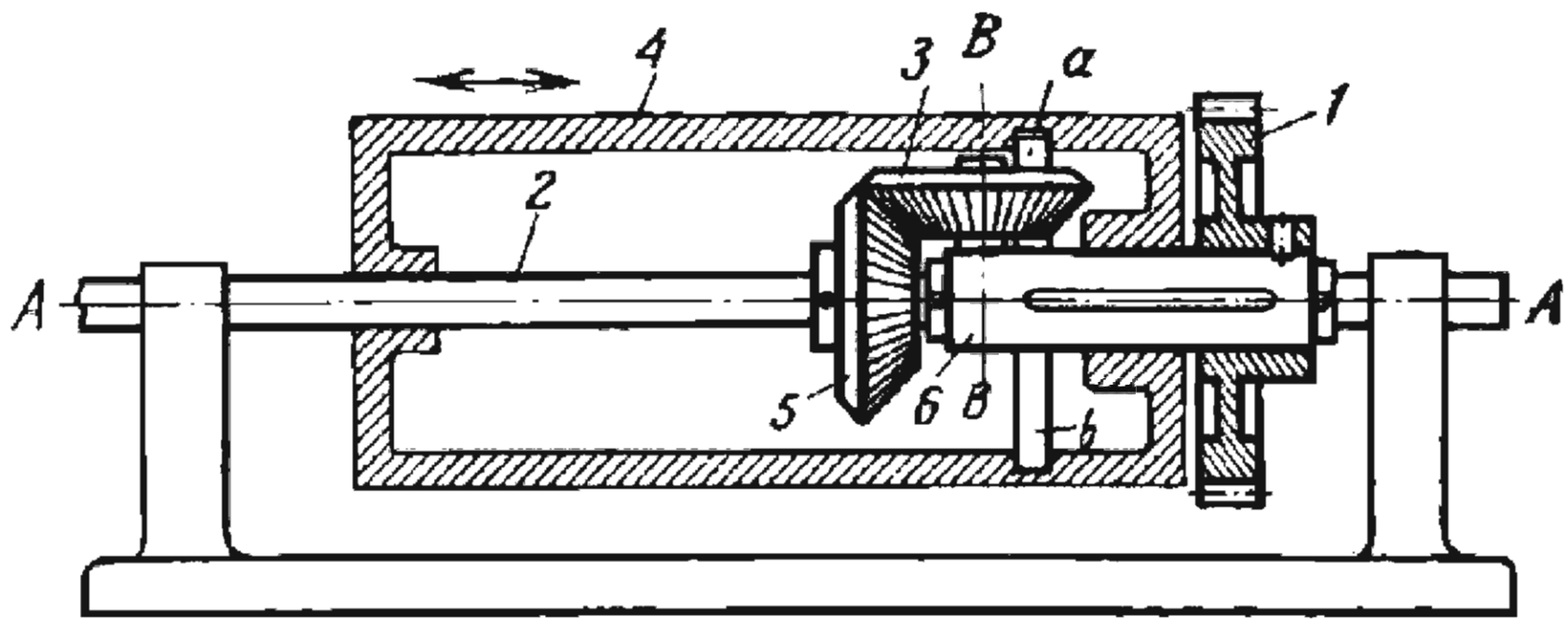

Gear *1* is mounted rigidly on sleeve *6* and rotates freely with the sleeve on fixed shaft *2* about fixed axis *A-A*. Bevel gear *5* is rigidly attached to shaft *2* and meshes with bevel gear *3* which rotates about axis *B-B* of a stud on sleeve *6* and also rotates, together with sleeve *6*, about axis *A-A*. Pin *a* of gear *3* enters annular internal slot *b* of cylinder *4* which rotates about axis *A-A* and slides along shaft *2* and the key on sleeve *6*. Sleeve *6* is restricted axially by two stop rings. When gear *1* rotates, it drives cylinder *4* and gear *3* rolls around stationary gear *5* so that pin *a* oscillates cylinder *4* along shaft *2* and sleeve *6*.

2402	THREE-LINK DIFFERENTIAL TOOTHED STOP DEVICE FOR WATCHES	SG FD

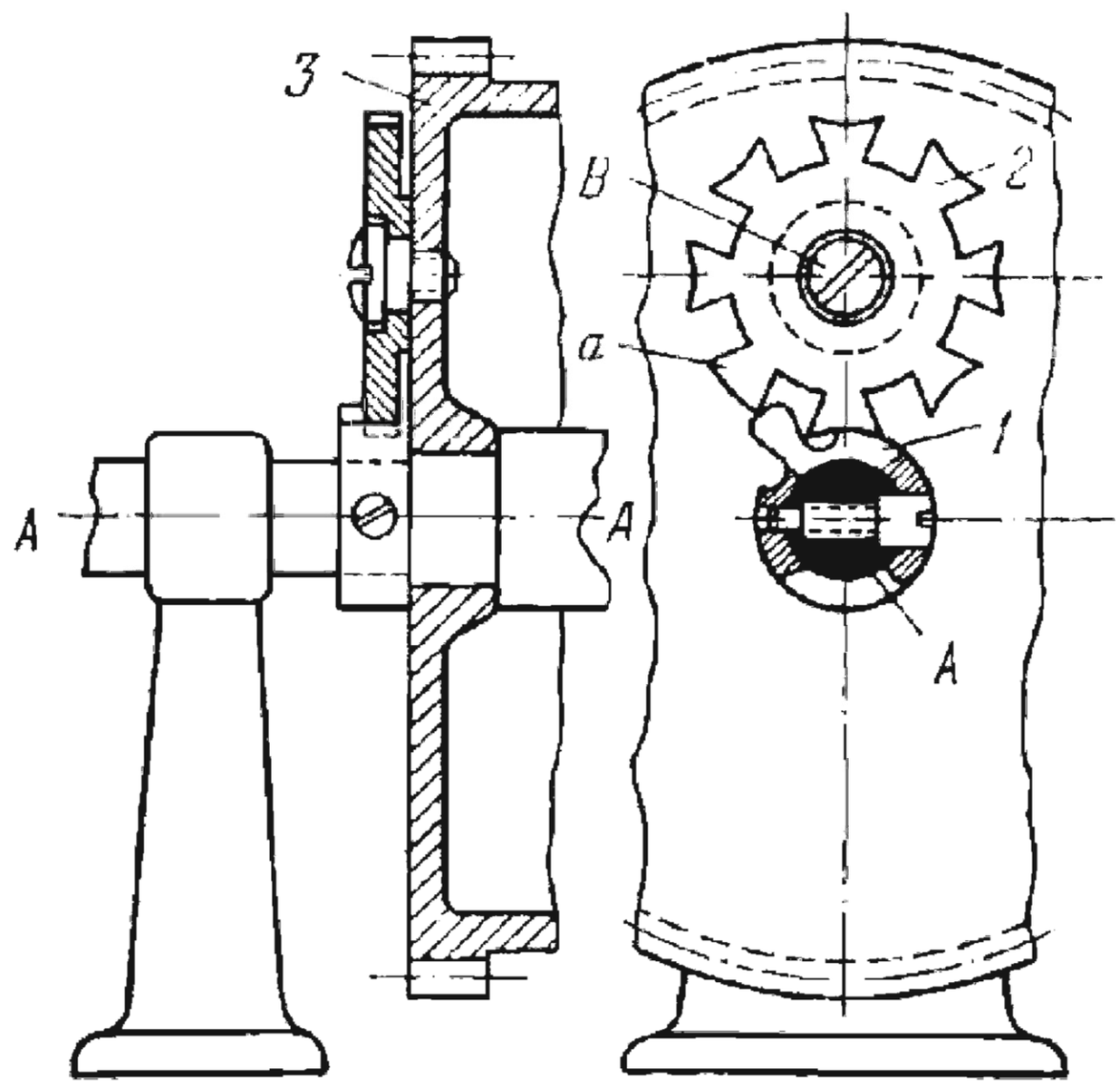

Single-tooth gear *1* rotates about fixed axis *A-A*. Gear *2* has eight teeth and rotates about axis *B* of toothed casing *3*. After being rotated seven revolutions, winding shaft *A-A* is stopped when the tooth of gear *1*, rigidly mounted on the shaft, runs against the concentric surface of tooth *a* on gear *2*. As the main spring mounted on axis *A-A* runs down, casing *3* rotates in the direction opposite to the one required in winding the spring. At this, gear *2* rolls around single-tooth gear *1*. For each revolution of casing *3*, gear *2* turns one tooth with respect to its axis *B*.

SECTON FOURTEEN

Lever-Gear Mechanisms

LrG

1. General-Purpose Four-Link Mechanisms 4L (2403 through 2411)
2. General-Purpose Five-Link Mechanisms 5L (2412 through 2433)
3. General-Purpose Multiple-Link Mechanisms ML (2434 through 2465)
4. Mechanisms for Generating Curves Ge (2466 through 2485)
5. Mechanisms for Mathematical Operations MO (2486 through 2506)
6. Dwell Mechanisms D (2507 through 2518)
7. Operating Claw Mechanisms of Motion Picture Cameras OC (2519 through 2522)
8. Guiding Mechanisms and Inversors GI (2523 through 2528)
9. Mechanisms of Measuring and Testing Devices M (2529 through 2532)
10. Piston Machine Mechanisms PM (2533 and 2534)
11. Mechanisms of Vibrating Machines and Devices VM (2535 and 2536)
12. Gripping, Clamping and Expanding Mechanisms GC (2537 and 2538)
13. Clutch and Coupling Mechanisms C (2539 and 2540)
14. Switching, Engaging and Disengaging Mechanisms SE (2541)
15. Link-Length Adjustment Mechanisms LL (2542)
16. Mechanisms of Other Functional Devices FD (2543 through 2576)

2403	CARDAN-TYPE PLANETARY-GEAR SCOTCH-YOKE MECHANISM	LrG 4L

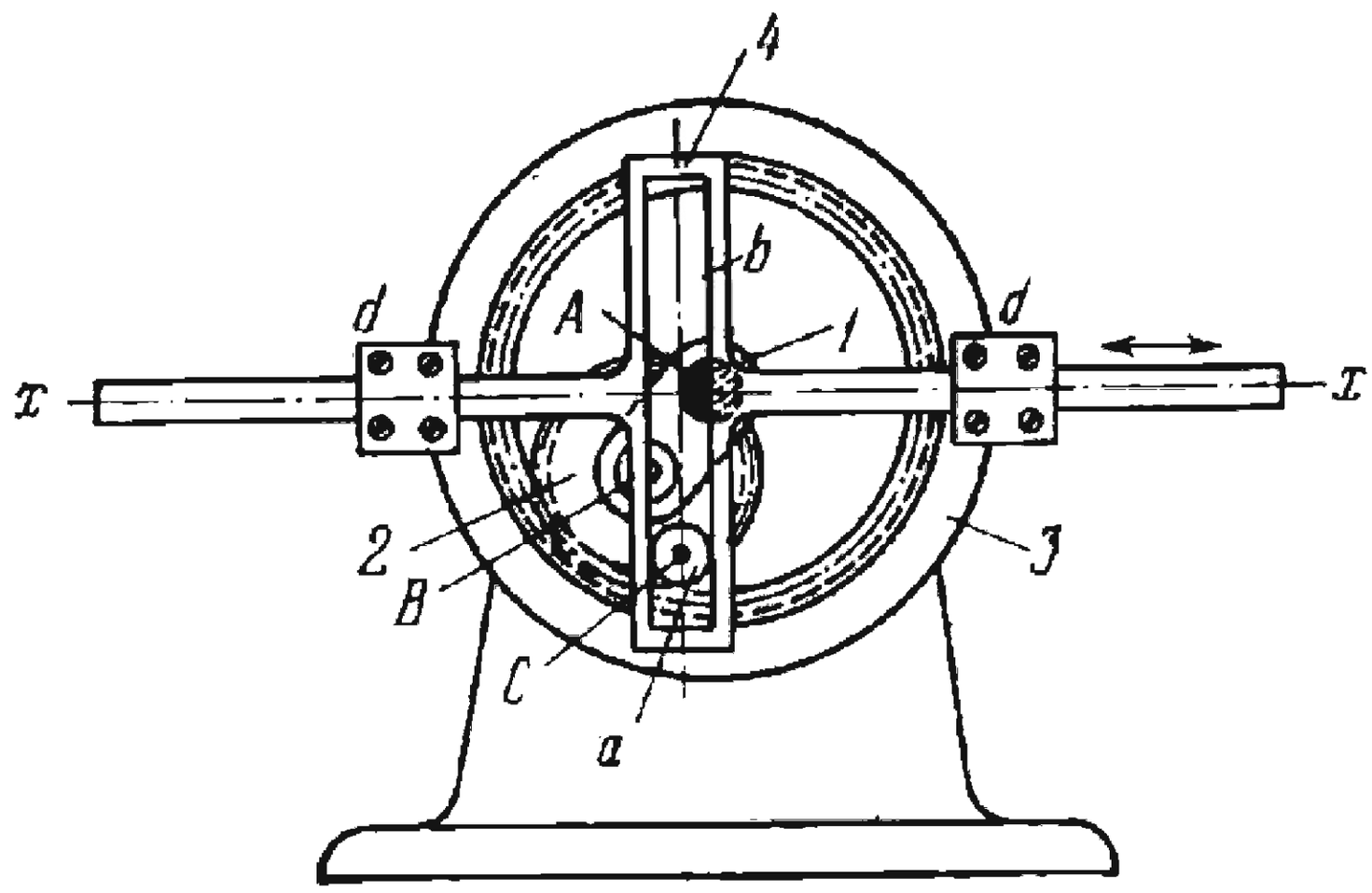

Carrier *1* rotates about fixed axis *A* and is connected by turning pair *B* to planet gear *2* which meshes with fixed internal sun gear *3*. Gear *2* has rigidly attached pin *a* which rotates about axis *C* and slides along slot *b* of slotted link *4*. Link *4* reciprocates in fixed guides *d-d*. The sizes of the links comply with the conditions: $r_3 = 2r_2$ and $\overline{BC} = r_2$, where r_2 and r_3 are the pitch radii of gears *2* and *3*. Point *C* travels along a straight line that coincides with a diameter of gear *3*. The angular velocities ω_1 and ω_2 of carrier *1* and planet gear *2* are of equal magnitude and opposite sign. The velocity of link *4* is

$$v_4 = v_C \cos \alpha$$

where v_C is the velocity of point *C* on gear *2*, and α is the constant angle between line *AC* and axis *x-x*.

2404	SLOTTED-LINK PLANETARY GEARING MECHANISM WITH TWO DWELLS OF THE DRIVEN LINK	LrG 4L

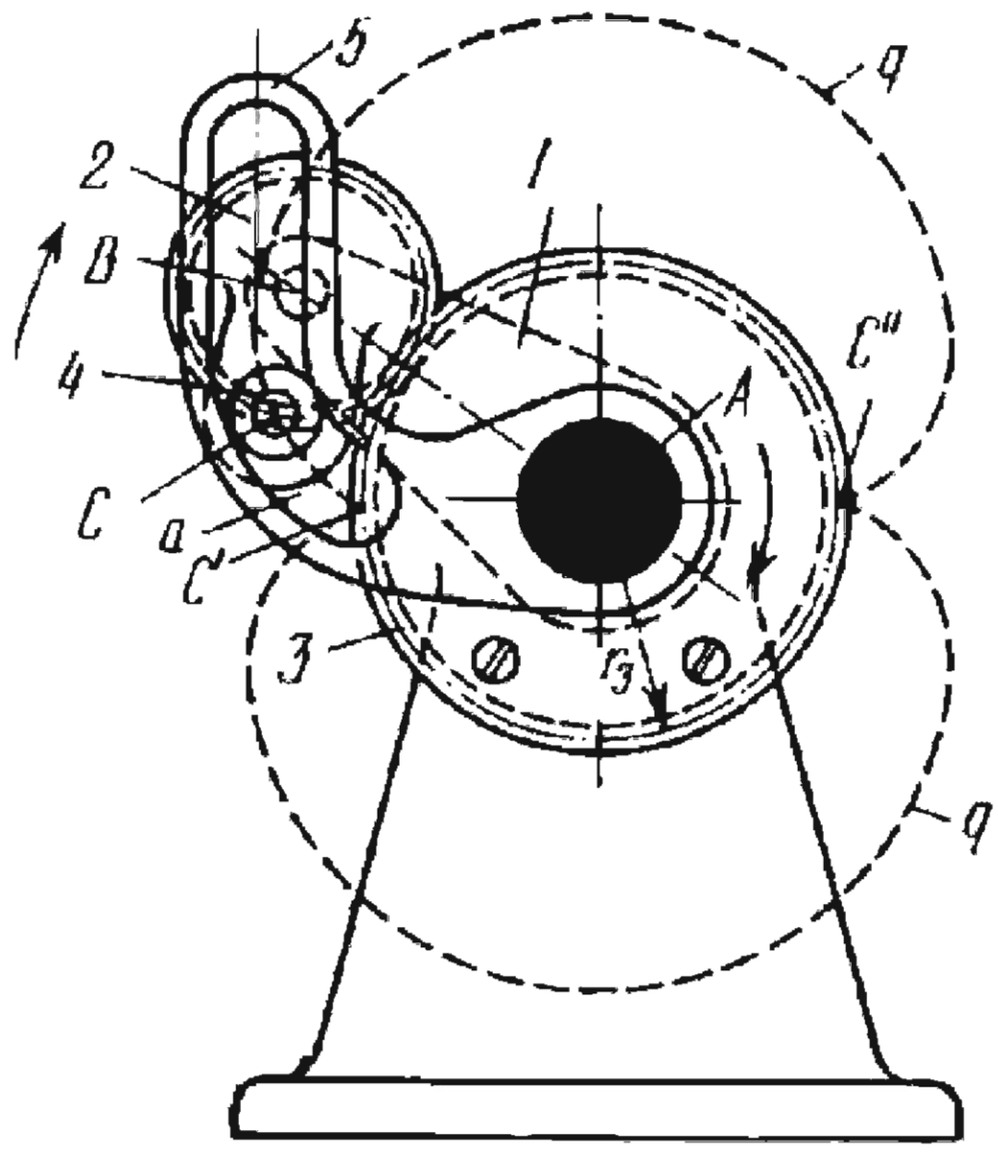

Carrier *1* rotates about fixed axis *A* and is connected by turning pair *B* to planet gear *2* which meshes with fixed sun gear *3*. Planet gear *2* has roller *4* which rotates about axis *C*. Roller *4* slides along curvilinear slot *a* of slotted link *5* which rotates about axis *A*. The sizes of the links comply with the conditions: $r_3 = 2r_2$ and $\overline{BC} = r_2$, where r_2 and r_3 are the pitch radii of gears *2* and *3*. Point *C* describes epicycloid *q-q*. Slotted link *5* has short dwells when point *C* is in positions *C'* and *C''*.

2405	LEVER-ECCENTRIC PLANETARY GEARING MECHANISM	LrG 4L

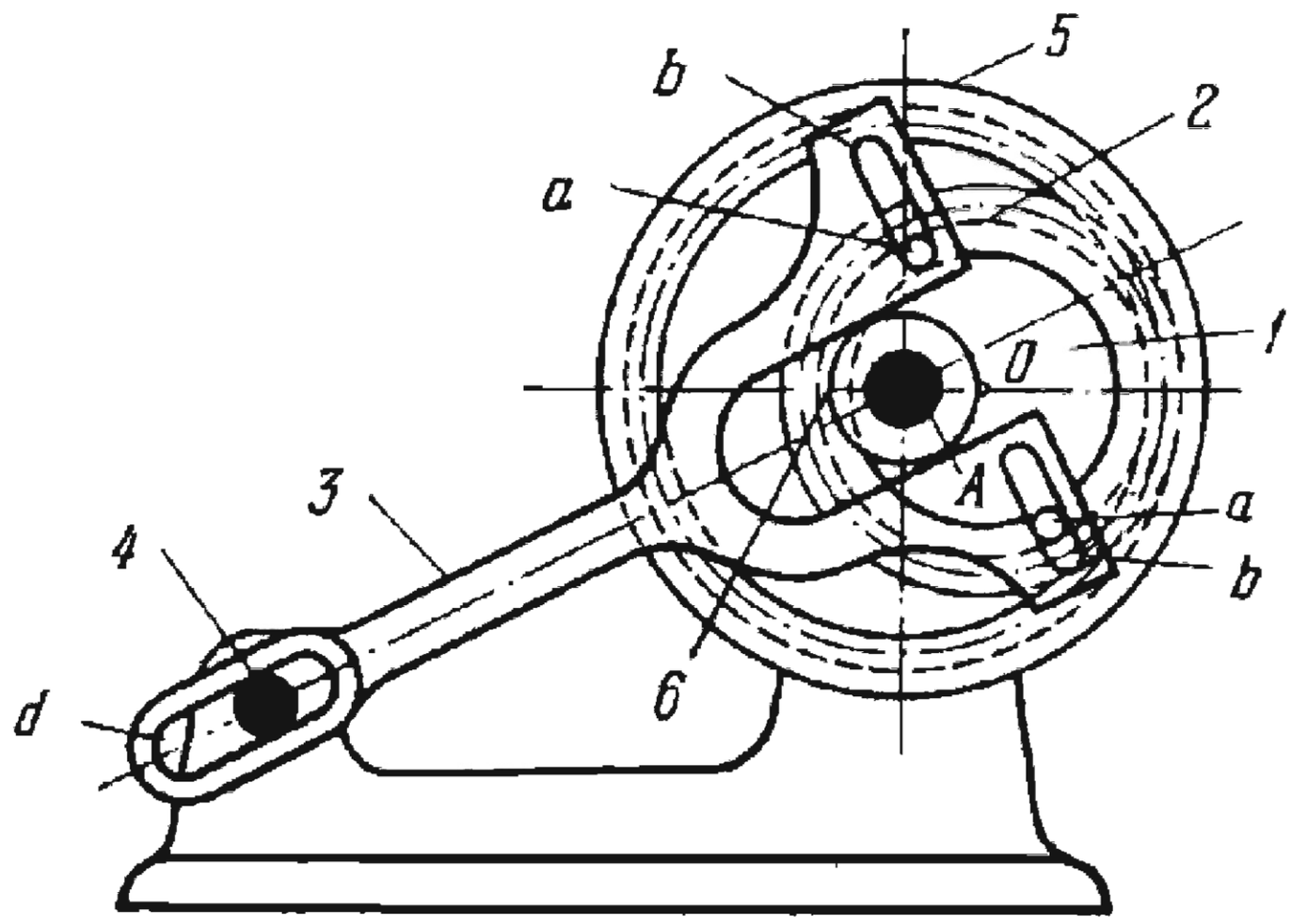

Round eccentric *1* rotates about fixed axis *A*. Ring gear *2* rotates about axis *O* of eccentric *1* and meshes with internal gear *5*. Link *3* has slots *b* which slide along pins *a* of ring gear *2*. Internal gear *5* rotates about axis *A*. Link *3* slides along hub *6* of eccentric *1* and is kept from rotating by fixed pin *4* along which slot *d* of link *3* slides. Thus gear *2* has circular translational motion at the same velocity as centre *O* of eccentric *1*. Therefore, the transmission ratio from eccentric *1* to gear *5* is

$$i_{15}=\frac{\overline{AO}}{r_5}=\frac{z_5-z_2}{z_5}$$

where r_5 is the pitch radius of gear *5*, and z_2 and z_5 are the numbers of teeth of gears *2* and *5*. Large transmission ratios can be obtained if there is a small difference between the numbers of teeth of the gears.

2406	LEVER-GEAR MECHANISM WITH A COMPLEX RACK	LrG 4L

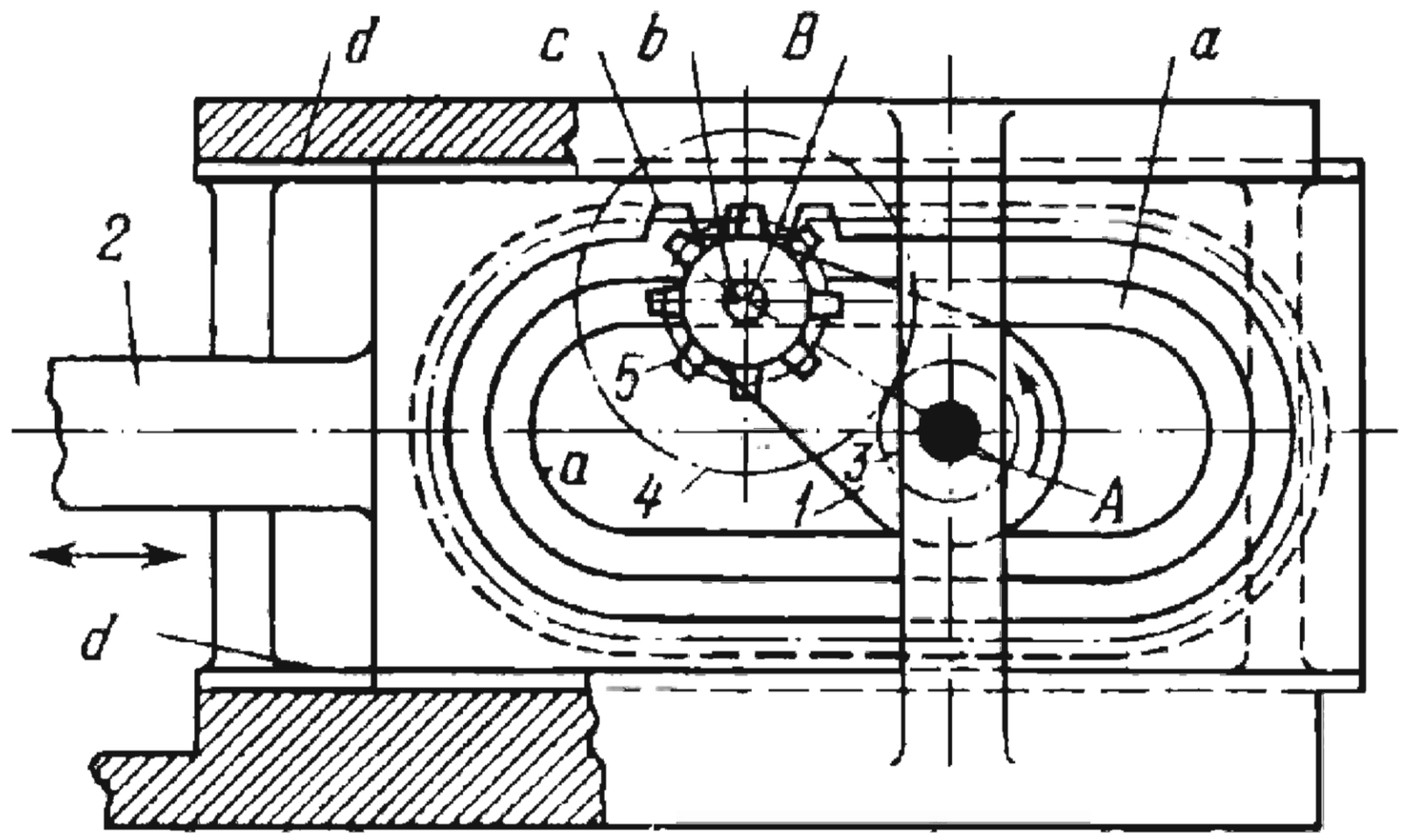

Lever *1* rotates about fixed axis *A* and is connected by turning pair *B* to pinion *5* which is rigidly attached to gear *4*. Gear *4* meshes with gear *3* which rotates about axis *A*. Pin *b* of pinion *5* slides along slot *a* and provides for engagement of pinion *5* with complex internal rack *c* which consists of two straight and two semicircular portions. Rack *c* belongs to slider *2* which reciprocates in fixed guides *d-d*. When driving gear *3* rotates continuously at uniform velocity, pinion *5* rotates about axis *B*, imparting reciprocating motion to driven slider *2* at uniform velocity during the periods that pin *b* slides along the straight portions of slot *a*. When pin *b* slides along the semicircular portions, lever *1* turns about axis *A* and slide *2* has nonuniform velocity.

2407	LEVER-GEAR MECHANISM WITH A COMPLEX GEAR	LrG 4L

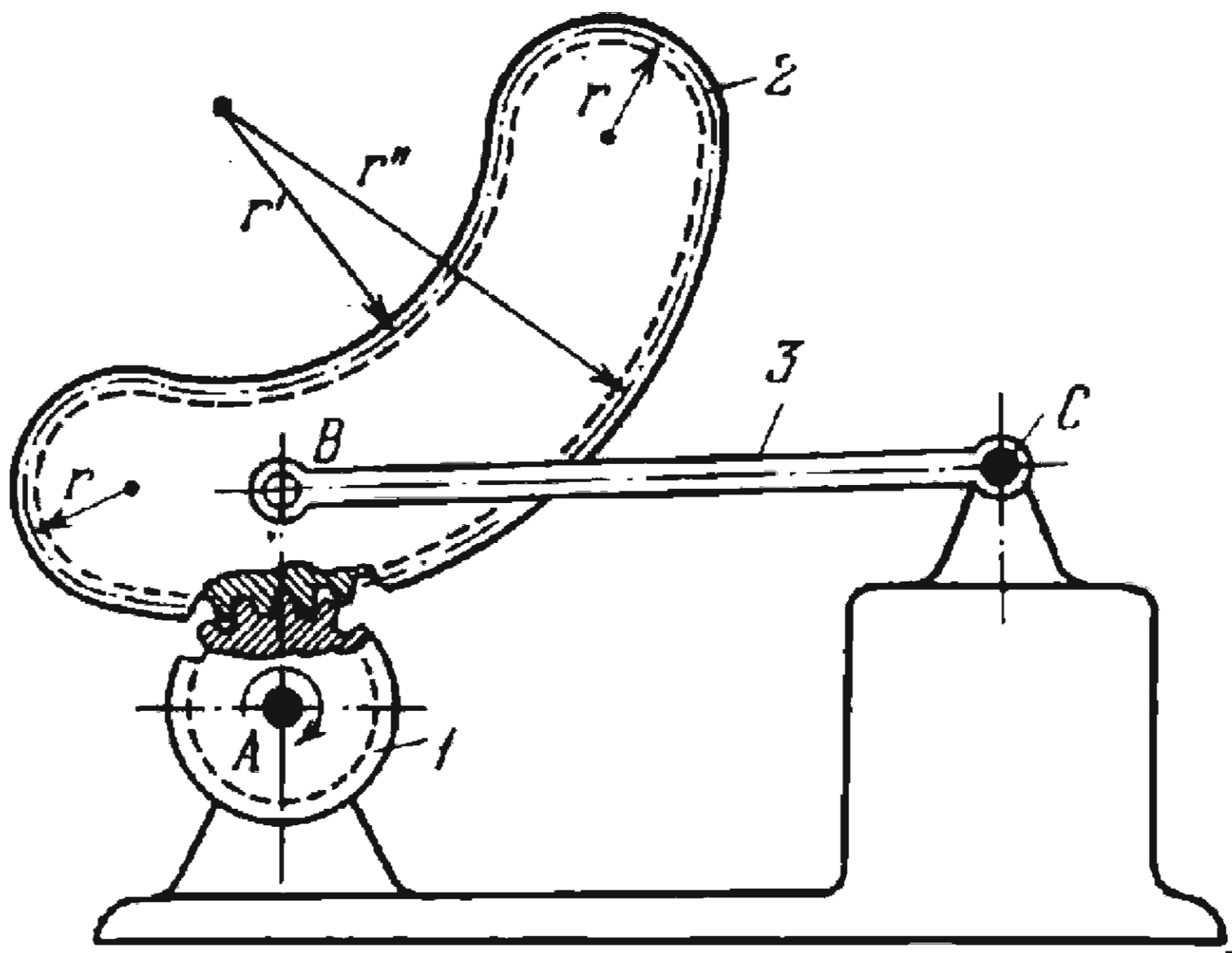

Circular pinion *1* rotates about fixed axis *A* and meshes with complex gear *2*. The pitch line of gear *2* consists of two semicircles of radius r and two circular arcs of radii r' and r''. The dimensions of gear *2* comply with the condition: $r'' - r' = 2r$. Gear *2* is connected by turning pair *B* to link *3* which turns about fixed axis *C*. When pinion *1* rotates at constant velocity, link *3* has a complex oscillating motion.

2408	LEVER-GEAR MECHANISM WITH A COMPLEX GEAR AND A DWELL OF THE DRIVEN LINK	LrG 4L

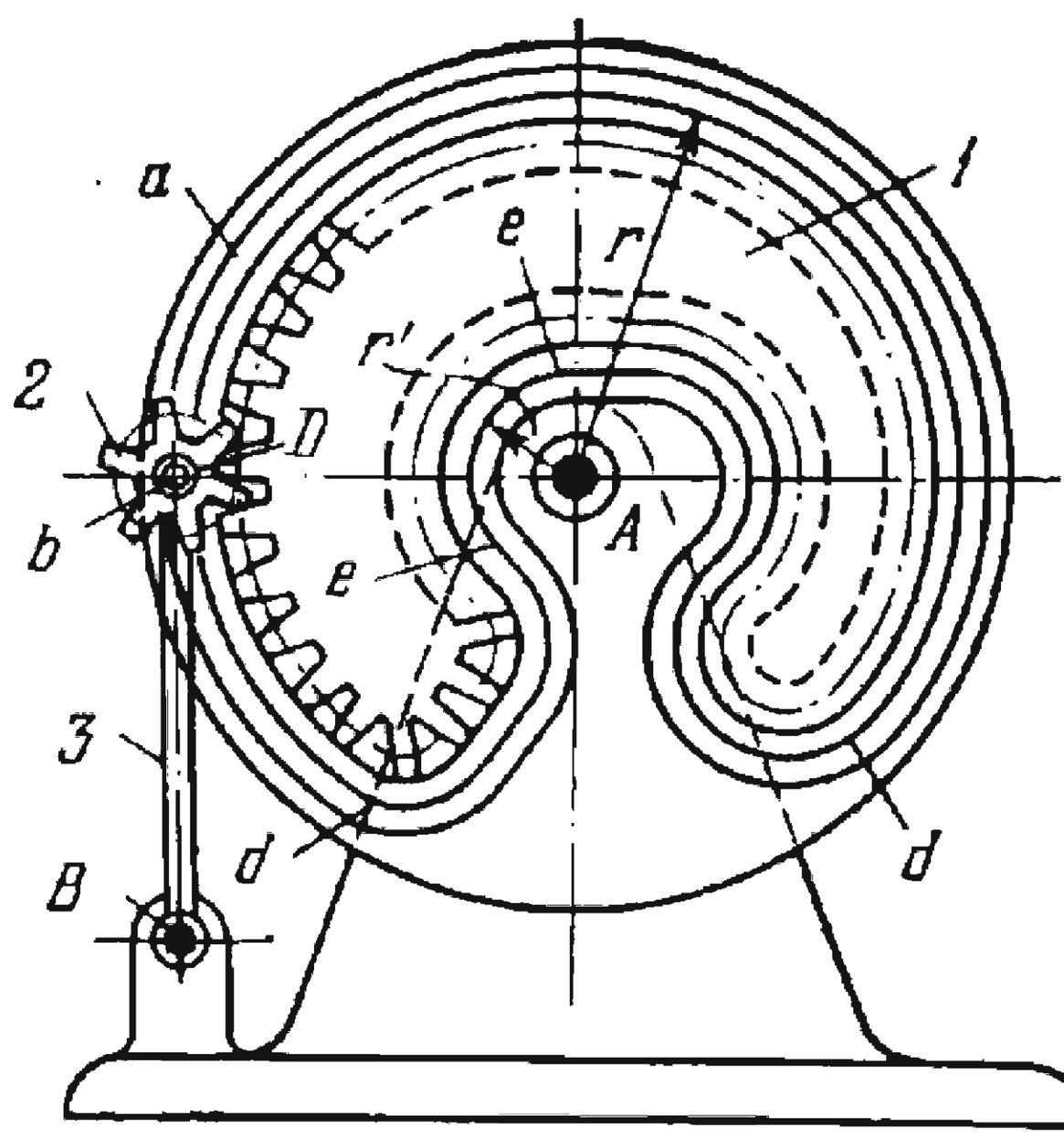

Complex gear *1* rotates about fixed axis *A* and meshes with circular pinion *2*. Pinion *2* has pin *b* which slides along slot *a* of gear *1*. The slot and the pitch curve of gear *1* are of similar complex shape. Portions of slot *a*, *d-d* and *e-e*, describe circular arcs of radii *r* and *r'*. Pinion *2* is connected by turning pair *D* to link *3* which turns about fixed axis *B*. When gear *1* rotates at uniform velocity, link *3* has a complex oscillating motion with two long dwells during the periods when pin *b* slides along circular portions *d-d* and *e-e*.

2409	LEVER-GEAR BLADE-TURNING MECHANISM	LrG 4L

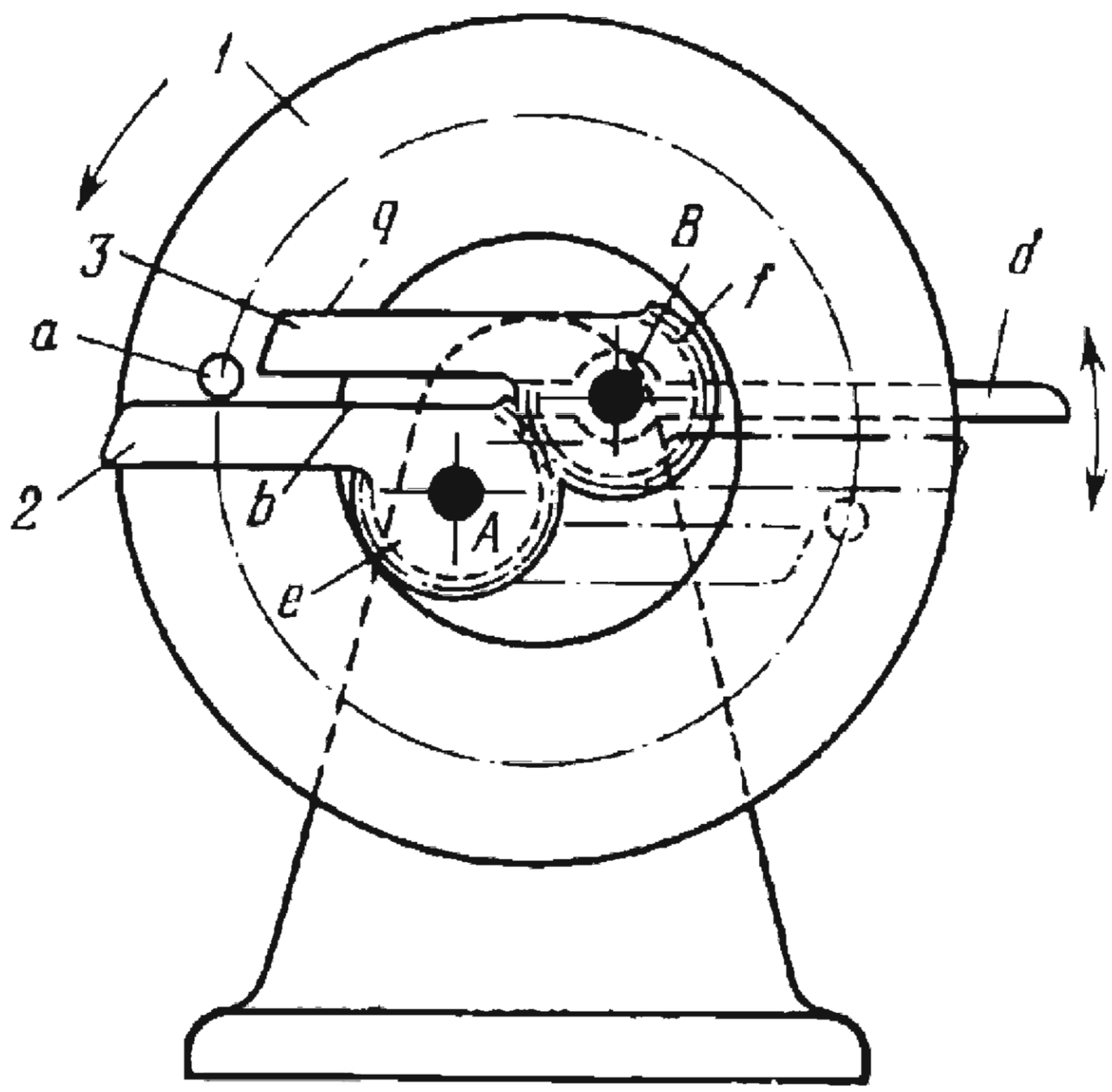

Disk *1* rotates about a fixed axis coinciding with its centre. Pin *a*, fastened on disk *1*, alternately engages the straight portions *b* of link *2* and *q* of link *3*. Links *2* and *3* turn about fixed axes *A* and *B*. Link *2* has gear segment *e* which meshes with gear segment *f* of link *3*. The sizes of the links comply with the condition $r_2 = r_3$, where r_2 and r_3 are the pitch radii of the gear segments of links *2* and *3*. When disk *1* rotates counterclockwise, links *2* and *3* have oscillating motions with an amplitude of 180°. Blade *d*, attached to link *3* turns through the same angle.

2410	LEVER-GEAR EXTERNAL PLANETARY SLIDER-CRANK MECHANISM	LrG 4L

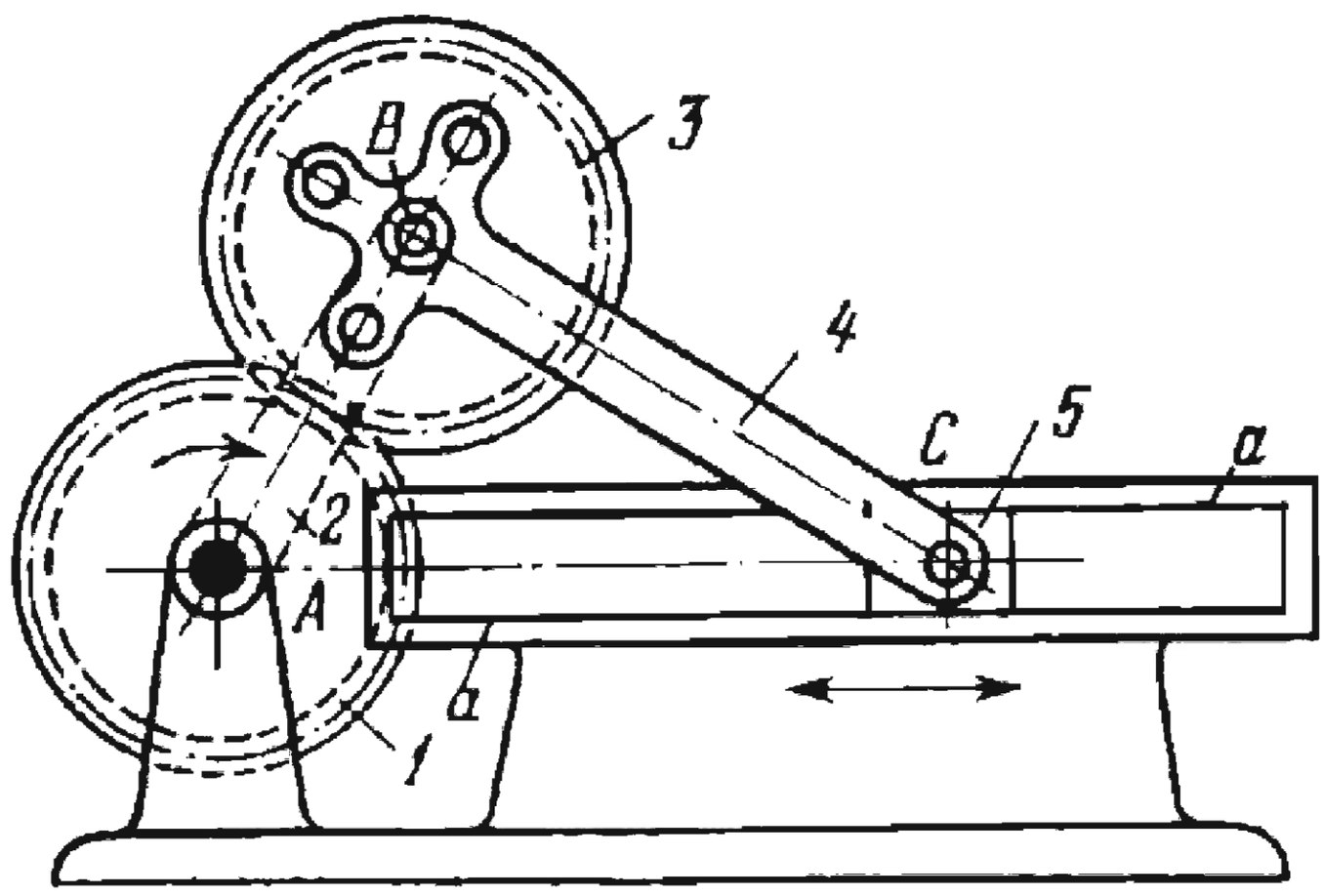

Gear *1* rotates about fixed axis *A* and meshes with gear *3* which is rigidly attached to connecting rod *4*. Crank *2* rotates about axis *A* and is connected by turning pair *B* to connecting rod *4* which, in turn, is connected by turning pair *C* to slider *5*. Slider *5* moves along fixed guides *a-a*. When driving gear *1* rotates, slider *5* reciprocates. The transmission ratio between gear *1* and crank *2*, $i_{12} = \frac{\omega_1}{\omega_2}$, where ω_1 and ω_2 are the angular velocities of gear *1* and crank *2*, is equal to

$$i_{12} = i_{42} i_{14} + (1 - i_{14})$$

where $i_{42} = \frac{\omega_4}{\omega_2}$, $i_{14} = \frac{\omega_1}{\omega_4} = -\frac{z_3}{z_1}$, ω_4 is the angular velocity of connecting rod *4* and rigidly attached gear *3*, and z_1 and z_3 are the numbers of teeth of gears *1* and *3*. Transmission ratio i_{42} is determined from the given dimensions of slider-crank linkage *ABC*. In one cycle of the mechanism, the speeds (rpm) of crank *2* and gear *1* are related by the condition

$$n_1 = n_2 \frac{z_1 + z_3}{z_1}.$$

2411	LEVER-GEAR PLANETARY MECHANISM WITH A NONCIRCULAR SUN GEAR	LrG 4L

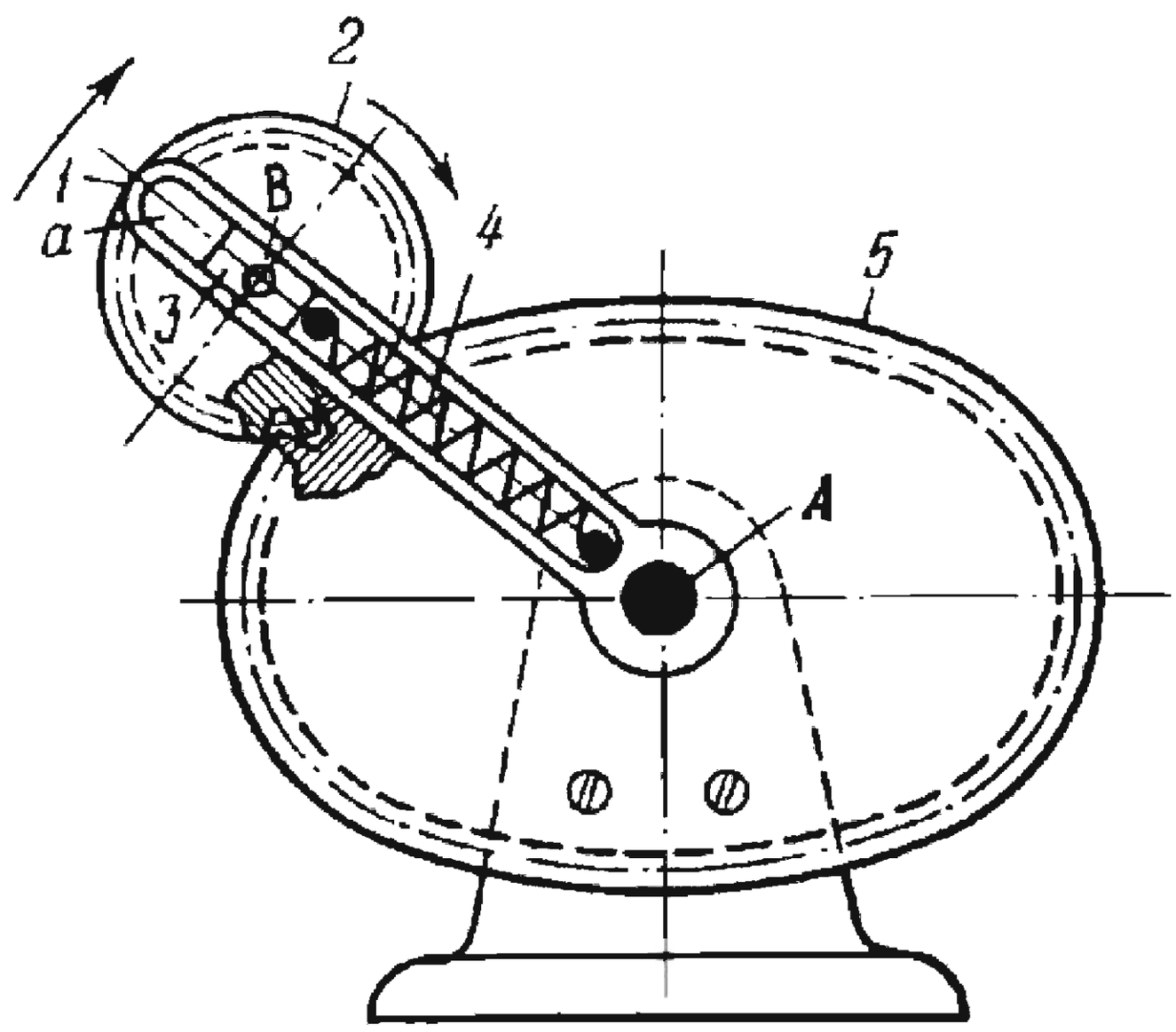

Slotted lever *1* rotates about fixed axis *A*. Slider *3* moves along radial slot *a* of lever *1* and is connected by turning pair *B* to circular planet gear *2* which meshes with noncircular fixed sun gear *5*. When slotted lever *1* rotates, gear *2* rotates about axes *B* and *A* and slides with slider *3* along slot *a* of lever *1*. Gear *2* is held in engagement with gear *5* by spiring 4.

2412	LEVER-GEAR RACK-AND-PINION MECHANISM	LrG 5L

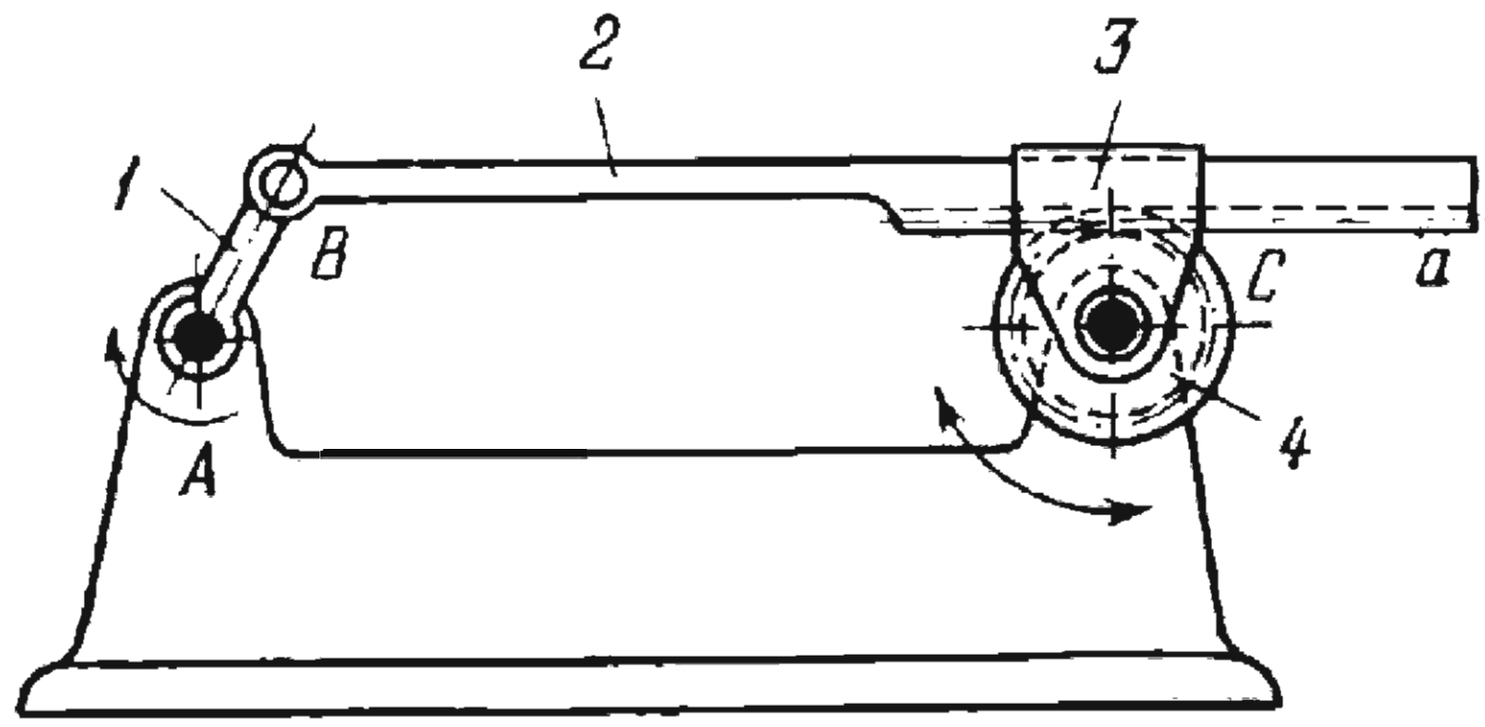

Crank *1* rotates about fixed axis *A* and drives connecting rod *2* which slides in guiding link *3*. Link *3* turns about fixed axis *C*. Connecting rod *2* has straight gear rack *a* which meshes with circular pinion *4*. When crank *1* rotates, pinion *4* has an oscillating motion about axis *C*. The total angle of rotation of pinion *4* in one direction is equal to

$$\varphi=\sqrt{\left(\frac{l+k}{r\pm e}\right)^2-1}-\sqrt{\left(\frac{l-k}{r\pm e}\right)^2-1}$$

where k is the length of link *1* ($\overline{AB}$), l is the distance $\overline{AC}$, r is the pitch radius of pinion *4*, and e is the distance from point *B* to the pitch line of rack *a* in the direction perpendicular to the pitch line.

2413	LEVER-GEAR MECHANISM WITH A ROUND RACK	LrG 5L

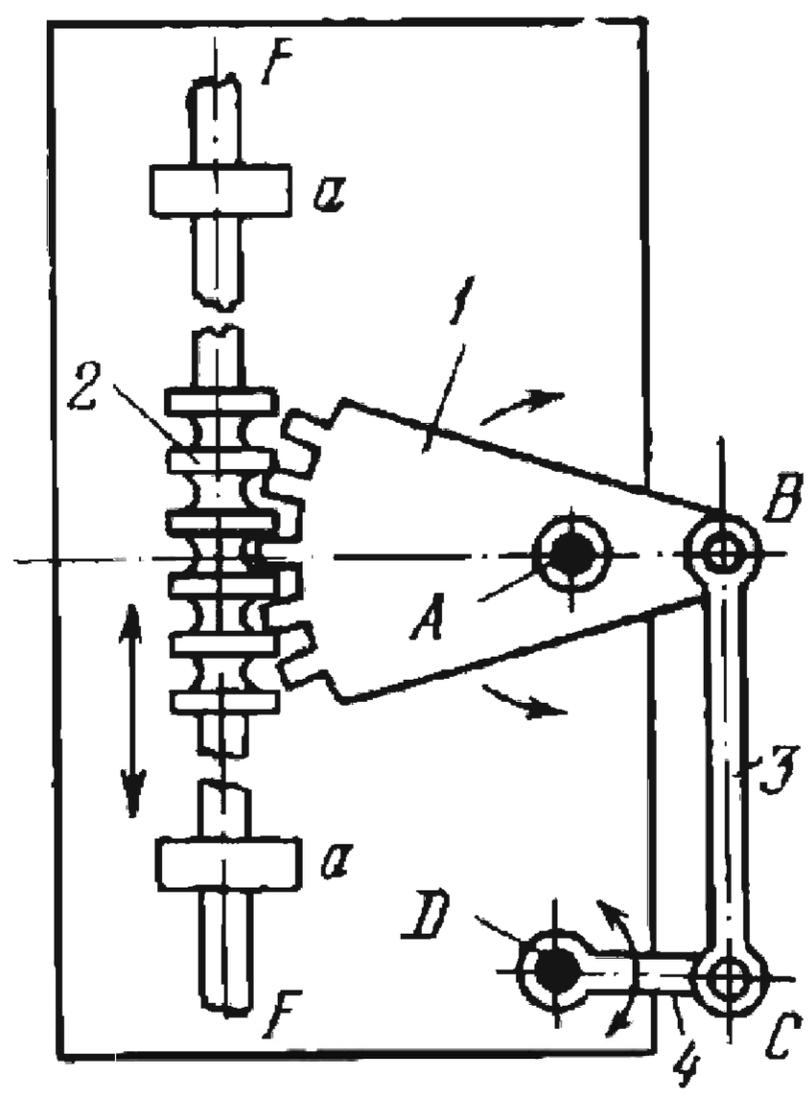

Segment gear *1* turns about fixed axis *A* and meshes with gear rack *2* which slides in fixed guides *a-a*. Rack *2* is round with annular teeth, enabling the rack to be additionally rotated about fixed axis *F*. Four-bar linkage *ABCD* is a parallelogram. The lengths of the links comply with the conditions: $\overline{AB} = \overline{DC}$ and $\overline{BC} = \overline{AD}$. The angular velocities of links *1* and *4* are equal, as are the velocities of points *B* and *C*.

2414	LEVER-GEAR PLANETARY PARALLEL-CRANK MECHANISM WITH A FIXED SUN GEAR	LrG 5L

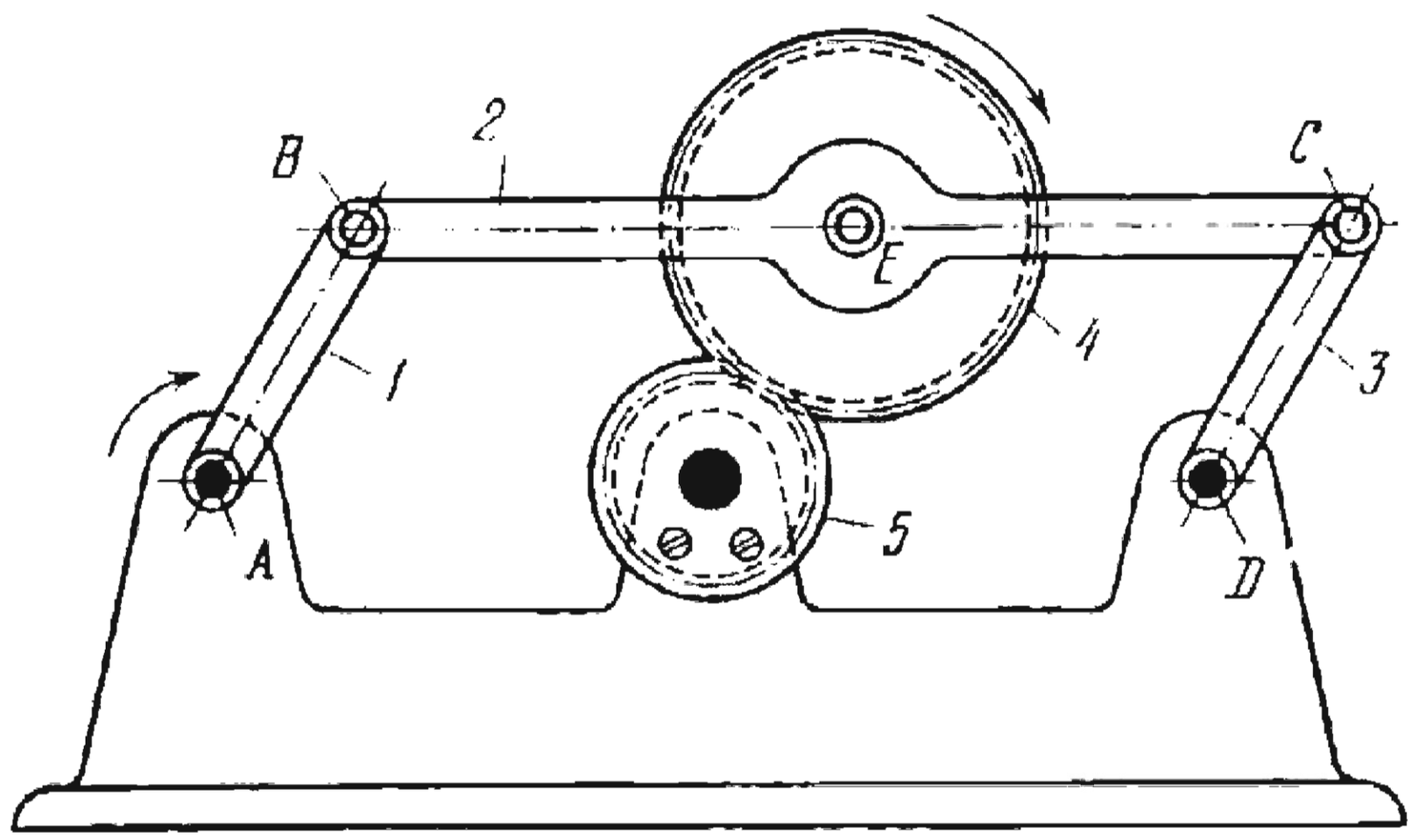

Cranks *1* and *3* of parallel-crank linkage *ABCD* rotate about fixed axes *A* and *D*. Planet gear *4* is connected by turning pair *E* to connecting rod *2* and meshes with fixed sun gear *5*. The dimensions of the links comply with the conditions: $\overline{AB} = \overline{DC} = r$, $\overline{BC} = \overline{AD}$ and $r_4 + r_5 = r$, where r_4 and r_5 are the pitch radii of gears *4* and *5*. The transmission ratio from crank *1* to gear *4* is

$$i_{14} = \frac{\omega_1}{\omega_4} = \frac{r_4}{r} = \frac{r_4}{r_4 + r_5} = \frac{z_4}{z_4 + z_5}$$

where ω_1 and ω_4 are the angular velocities of crank *1* and gear *4*, and z_4 and z_5 are the numbers of teeth of gears *4* and *5*. Crank *1* and gear *4* rotate in the same direction.

2415	LEVER-GEAR EXTERNAL PLANETARY PARALLEL-CRANK MECHANISM	LrG 5L

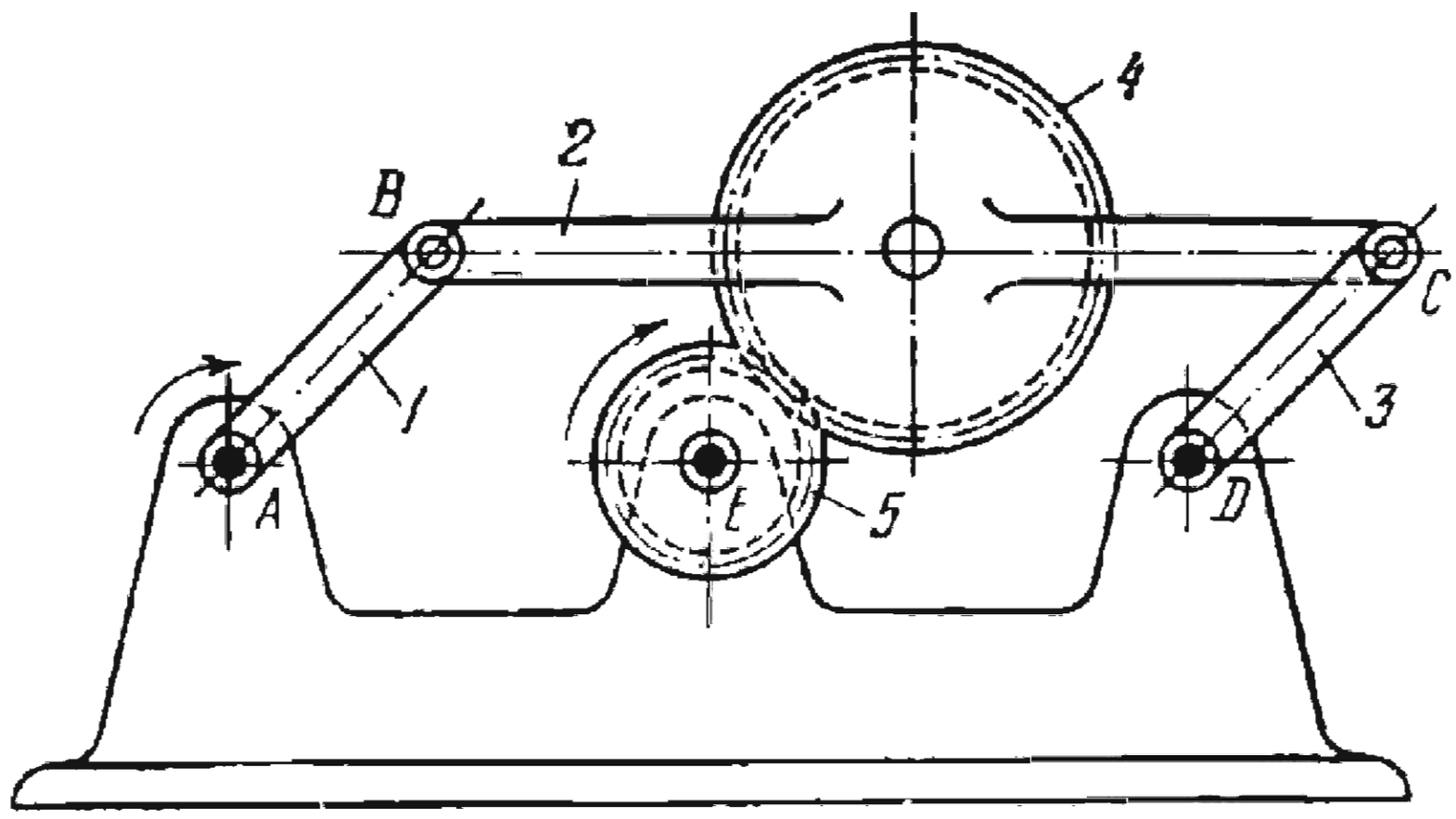

Cranks *1* and *3* of parallel-crank linkage *ABCD* rotate about fixed axes *A* and *D*. Gear *4* is rigidly attached to (or integral with) connecting rod *2* and meshes with gear *5* which rotates about fixed axis *E*. The dimensions of the links comply with the conditions: $\overline{AB} = \overline{DC} = r$, $\overline{BC} = \overline{AD}$ and $r_4 + r_5 = r$, where r_4 and r_5 are the pitch radii of gears *4* and *5*. The transmission ratio from crank *1* to gear *5* is

$$i_{15} = \frac{\omega_1}{\omega_5} = \frac{r_5}{r} = \frac{r_5}{r_4 + r_5} = \frac{z_5}{z_4 + z_5}$$

where ω_1 and ω_5 are the angular velocities of crank *1* and gear *5*, z_4 and z_5 are the numbers of teeth of gears *4* and *5*. Crank *1* and gear *5* rotate in the same direction.

2416	LEVER-GEAR INTERNAL PLANETARY PARALLEL-CRANK MECHANISM	LrG 5L

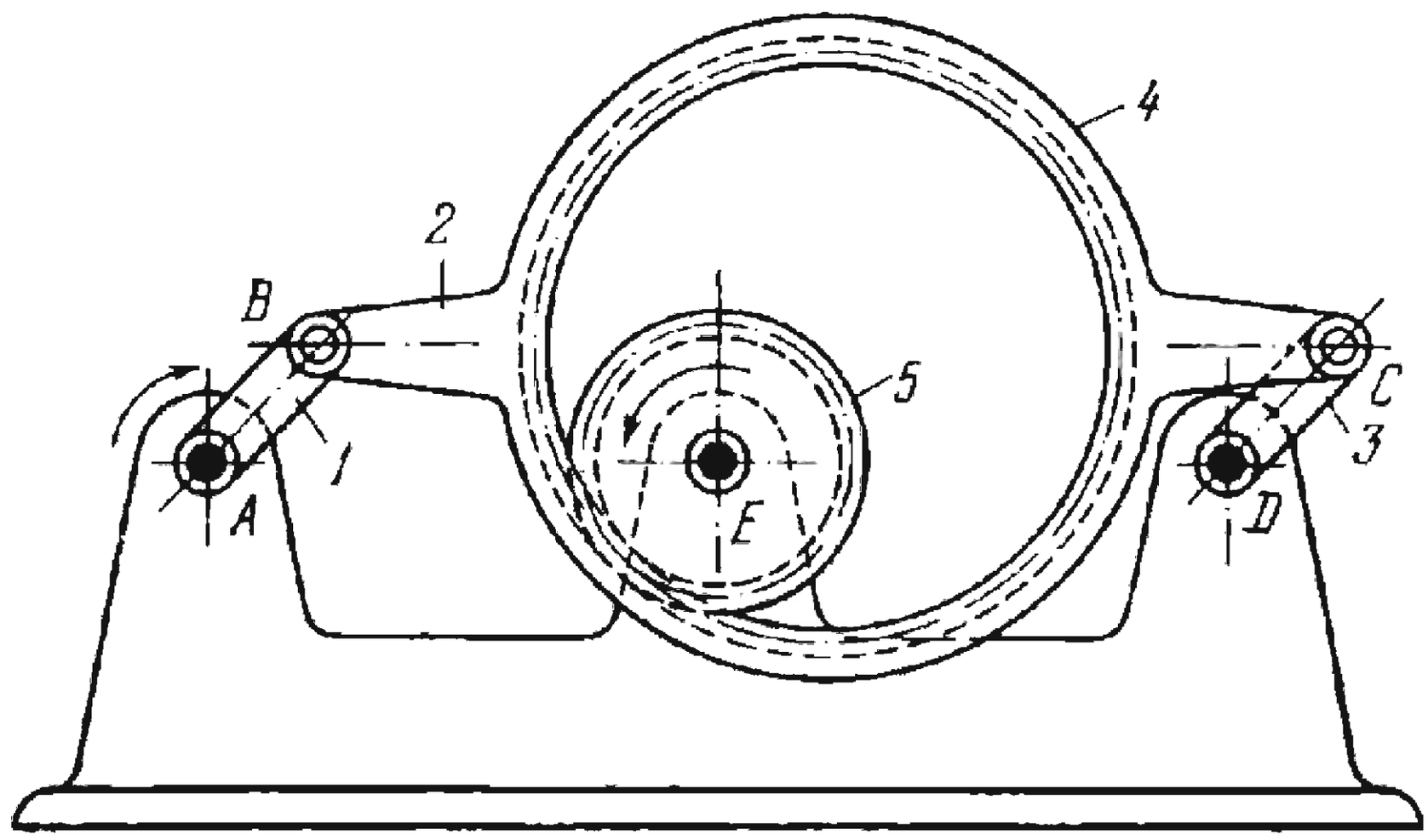

Cranks *1* and *3* of parallel-crank linkage *ABCD* rotate about fixed axes *A* and *D*. Internal gear *4* is rigidly attached to (or integral with) connecting rod *2* and meshes with gear *5* which rotates about fixed axis *E*. The dimensions of the links comply with the conditions: $\overline{AB} = \overline{DC} = r$, $\overline{BC} = \overline{AD}$ and $r_4 - r_5 = r$, where r_4 and r_5 are the pitch radii of gears *4* and *5*. The transmission ratio from crank *1* to gear *5* is

$$i_{15} = \frac{\omega_1}{\omega_5} = \frac{r_5}{r} = \frac{r_5}{r_4 - r_5} = \frac{z_5}{z_4 - z_5}$$

where ω_1 and ω_5 are the angular velocities of crank *1* and gear *5*, and z_4 and z_5 are the numbers of teeth of gears *4* and *5*. Crank *1* and gear *5* rotate in opposite directions. Large transmission ratios can be obtained if there is a small difference between the numbers of teeth of the gears.

2417	LEVER-GEAR INTERNAL PLANETARY SLIDER-CRANK MECHANISM	LrG 5L

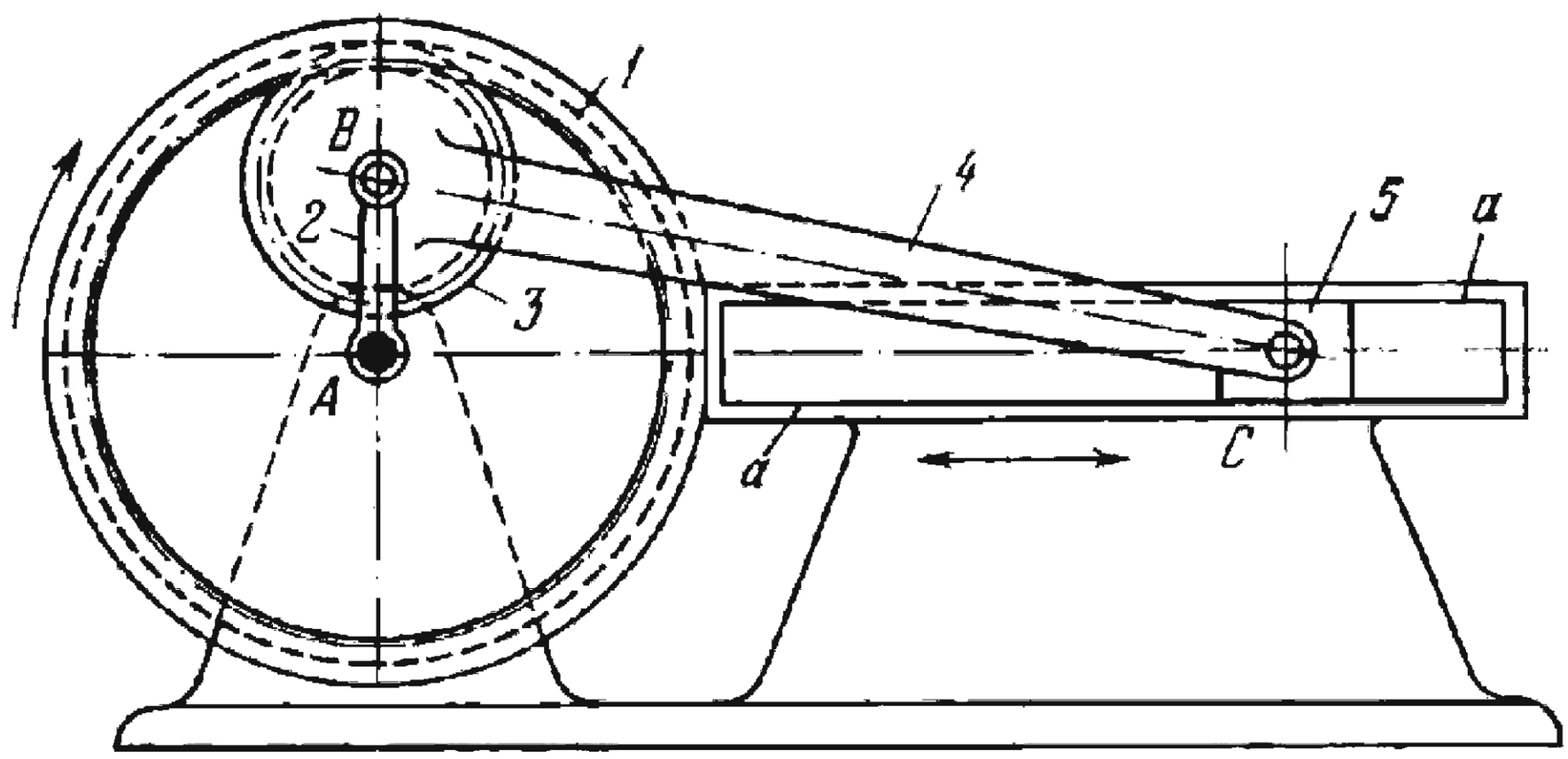

Internal gear *1* rotates about fixed axis *A* and meshes with gear *3* which is rigidly attached to (or integral with) connecting rod *4*. Crank *2* rotates about axis *A* and is connected by turning pair *B* to connecting rod *4* which, in turn, is connected by turning pair *C* to slider *5*. Slider *5* moves along fixed guides *a-a*. When driving gear *1* rotates, slider *5* reciprocates. The transmission ratio $i_{12} = \frac{\omega_1}{\omega_2}$, where ω_1 and ω_2 are the angular velocities of gear *1* and crank *2*, is equal to

$$i_{12} = i_{42} i_{14} + (1 - i_{14})$$

where $i_{42} = \frac{\omega_4}{\omega_2}$, $i_{14} = \frac{\omega_1}{\omega_4} = \frac{z_3}{z_1}$, ω_4 is the angular velocity of connecting rod *4* and gear *3*, and z_1 and z_3 are the numbers of teeth of gears *1* and *3*. Transmission ratio i_{42} is determined from the lengths of the links of slider-crank linkage *ABC*. In one full cycle, the speeds n_2 and n_1 of crank *2* and gear *1* (in rpm) are related by the equation

$$n_1 = n_2 \frac{z_1 - z_3}{z_1}.$$

If the number of teeth comply with the condition: $z_1 = 2z_3$, then

$$n_1 = \frac{n_2}{2}$$

i.e. slider *5* makes two full strokes (back and forth) to each revolution of gear *1*.

2418	LEVER-GEAR PLANETARY TWO-GEAR DOUBLE-SWING MECHANISM	LrG 5L

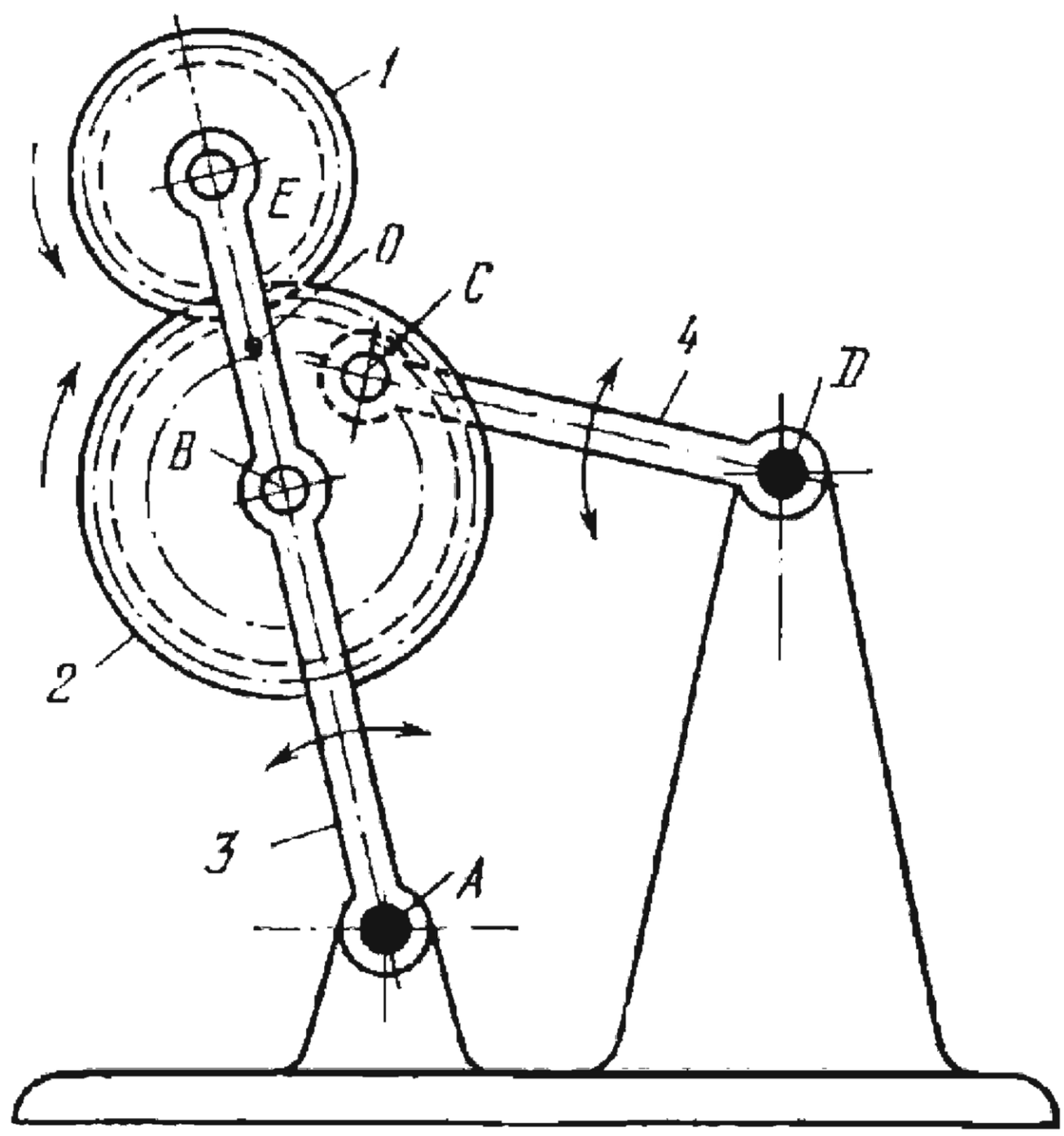

Rocker arms *3* and *4* of four-link double-swing linkage *ABCD* turn about fixed axes *A* and *D*. Connecting rod *BC* is designed as toothed gear *2* which is connected by turning pairs *B* and *C* to rocker arms *3* and *4*. Gear *2* meshes with gear *1* which rotates about axis *E* of rocker arm *3*. When driving gear *1* rotates, driven rocker arms *3* and *4* oscillate about axes *A* and *D* with transmission ratios equal to

$$i_{13}=\frac{\omega_1}{\omega_3}=\frac{\overline{AB}}{\overline{BO}},$$

and

$$i_{14}=\frac{\omega_1}{\omega_4}=\frac{\overline{DC}}{\overline{CO}}, \qquad i_{12}=\frac{z_2}{z_1}$$

where ω_1, ω_3 and ω_4 are the angular velocities of gear *1* and rocker arms *3* and *4*, $\overline{AB}$ and $\overline{DC}$ are the lengths of rocker arms *3* and *4*, $\overline{BO}$ and $\overline{CO}$ are the variable distances from points *B* and *C* to point *O* of intersection of the axes of links *3* and *4*, and z_1 and z_2 are the numbers of teeth of gears *1* and *2*.

2419	LEVER-GEAR INTERNAL PLANETARY PARALLEL-CRANK MECHANISM	LrG 5L

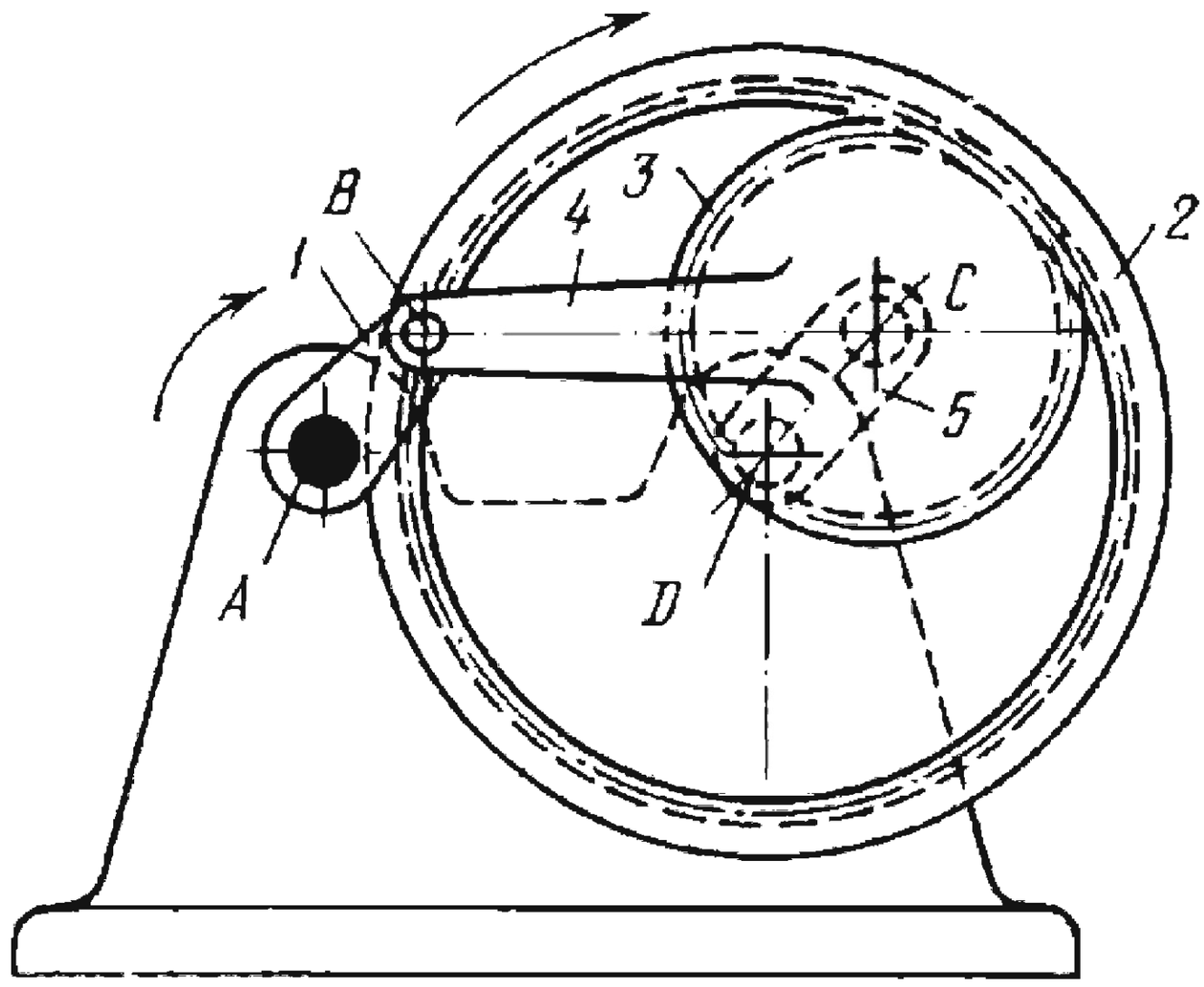

Cranks *1* and *5* of parallel-crank linkage *ABCD* rotate about fixed axes *A* and *D*. Gear *3* is rigidly attached to (or integral with) connecting rod *4* and meshes with internal gear *2* which rotates about axis *D*. The dimensions of the links comply with the conditions: $\overline{AB} = \overline{DC} = r$, $\overline{BC} = \overline{AD}$ and $r_2 - r_3 = r$, where r_2 and r_3 are the pitch radii of gears *2* and *3*. The transmission ratio from crank *1* to gear *2* is

$$i_{12} = \frac{\omega_1}{\omega_2} = \frac{r_2}{r} = \frac{r_2}{r_2 - r_3} = \frac{z_2}{z_2 - z_3}$$

where ω_1 and ω_2 are the angular velocities of crank *1* and gear *2*, and z_2 and z_3 are the numbers of teeth of gears *2* and *3*. Crank *1* and gear *2* rotate in the same direction. Large transmission ratios can be obtained if there is a small difference between the numbers of teeth of the gears.

2420	LEVER-GEAR PLANETARY FOUR-GEAR DOUBLE-SWING MECHANISM	LrG 5L

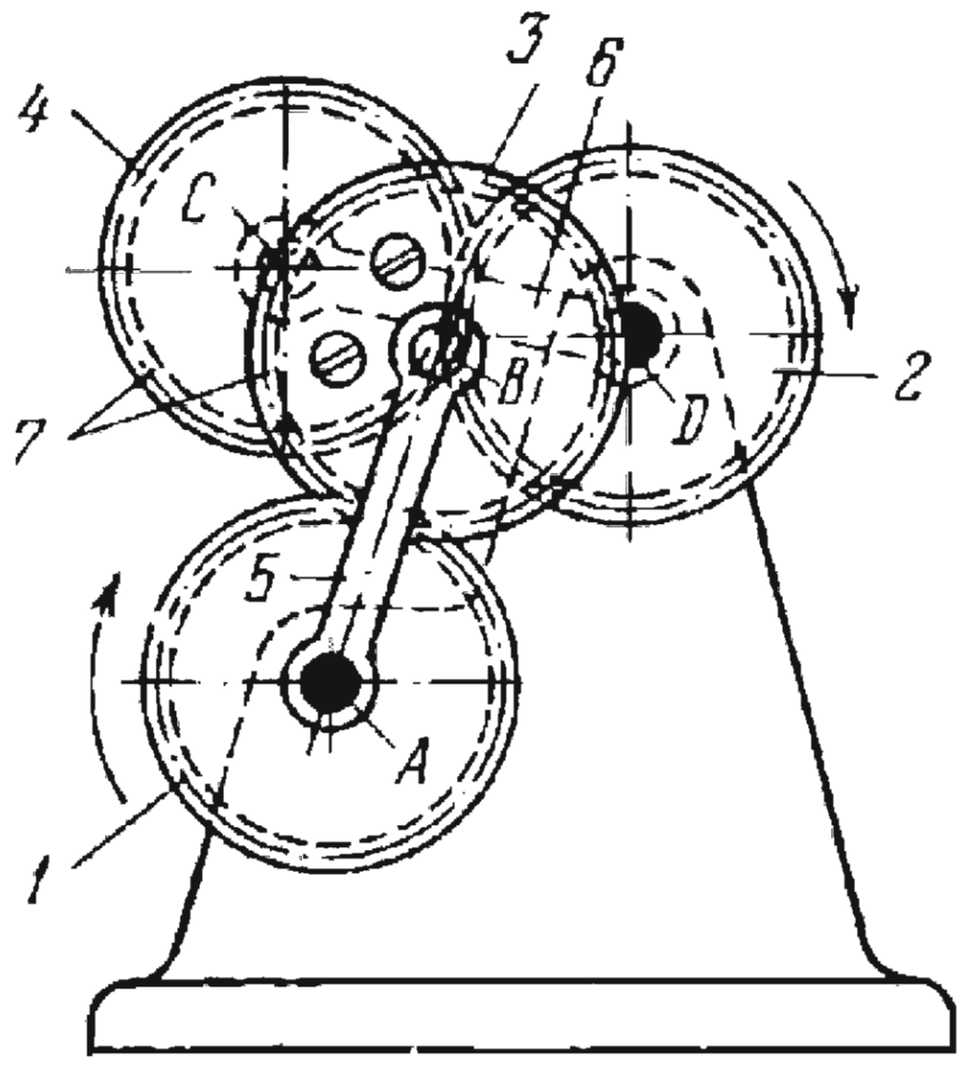

Gear *1* rotates about fixed axis *A* and meshes with gear *3* which rotates about axis *B*. Rocker arm *5* turns about axis *A* and is connected by turning pair *B* to connecting rod *7* which consists of two gears, *3* and *4*, rigidly attached together. Gear *4* meshes with gear *2* which rotates about fixed axis *D*. Rocker arm *6* turns about axis *D* and is connected by turning pair *C* to gear *4*. Gears *1*, *2*, *3* and *4* have the same diameter and number of teeth. The angular velocities ω_1, ω_2, ω_5, ω_6 and ω_7 of links *1*, *2*, *5*, *6* and *7* are related by the equations

$$\omega_7 = 2\omega_5 - \omega_1 = 2\omega_6 - \omega_2$$

where ω_5, ω_6 and ω_7 are determined by the given dimensions of the four-link double-swing linkage *ABCD* in which

$$\overline{AB} = \overline{DC} = 2r \quad \text{and} \quad \overline{BC} = r$$

where r is the pitch radius of gears *1*, *2*, *3* and *4*.

2421	WATT LEVER-GEAR PLANETARY SLIDER-CRANK MECHANISM	LrG 5L

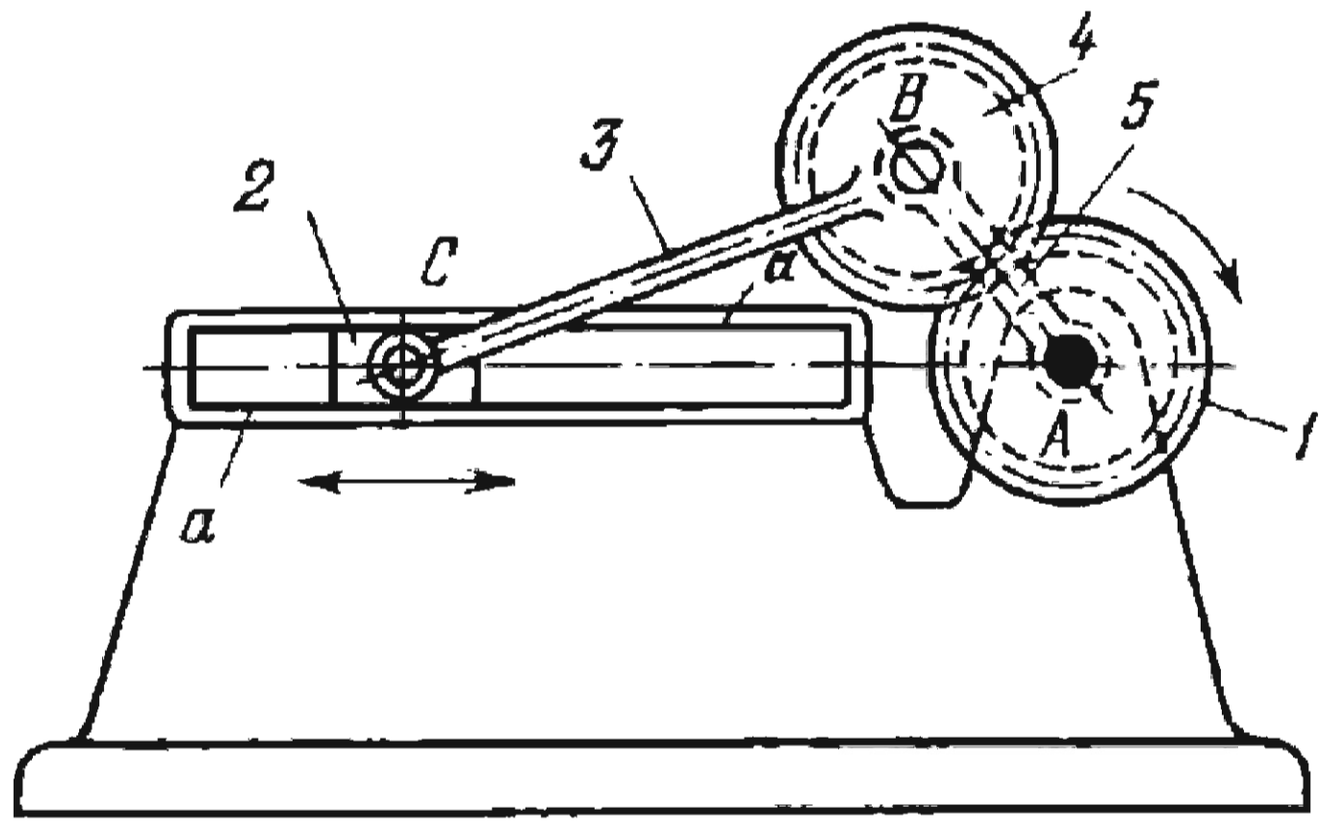

Gear *1* rotates about fixed axis *A* and meshes with gear *4* which is rigidly attached to (or integral with) connecting rod *3*. Crank *5* rotates about axis *A* and is connected by turning pair *B* to connecting rod *3* which, in turn, is connected by turning pair *C* to slider *2*. Slider *2* moves along fixed guides *a-a*. When driving gear *1* rotates about axis *A*, slider *2* reciprocates with one forward and one back stroke to two revolutions of gear *1*. Thus the transmission ratio from gear *1* to crank *5* is

$$i_{15} = \frac{\omega_1}{\omega_5} = 2$$

where ω_1 and ω_5 are the angular velocities of gear *1* and crank *5*.

2422	SLOTTED-LEVER-GEAR PLANETARY MECHANISM	T	LrG 5L

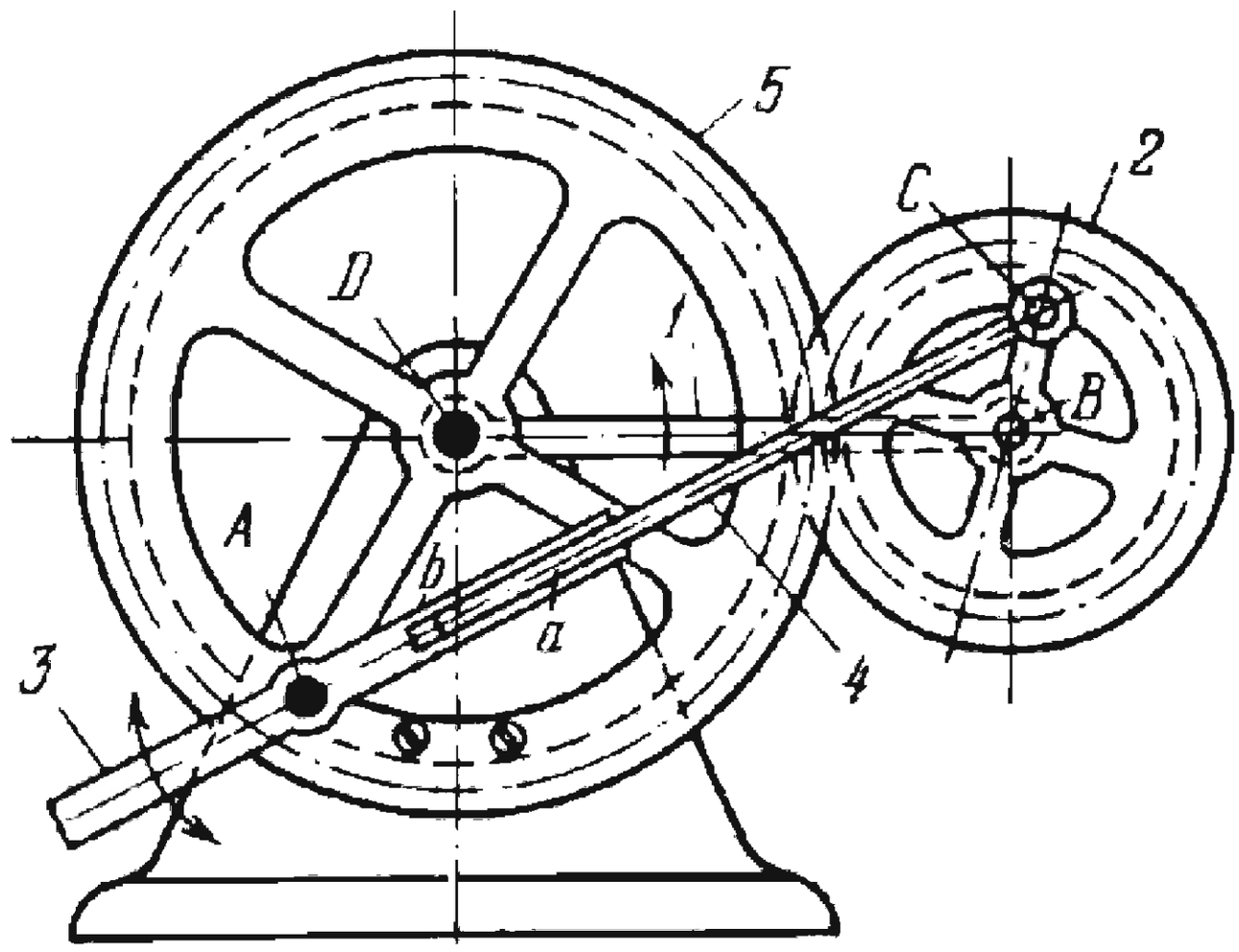

Link *1* rotates about fixed axis *D* and is connected by turning pair *B* to gear *2* which meshes with fixed gear *5*. Link *4* is connected by turning pair *C* to gear *2* and its end *a* slides in slot *b* of link *3* which turns about fixed axis *A*. When driving link *1* rotates about axis *D*, gear *2* rolls around gear *5* and link *3* oscillates about axis *A*.

2423	SLOTTED-LEVER-GEAR MECHANISM WITH TWO CIRCULAR GEARS	LrG 5L

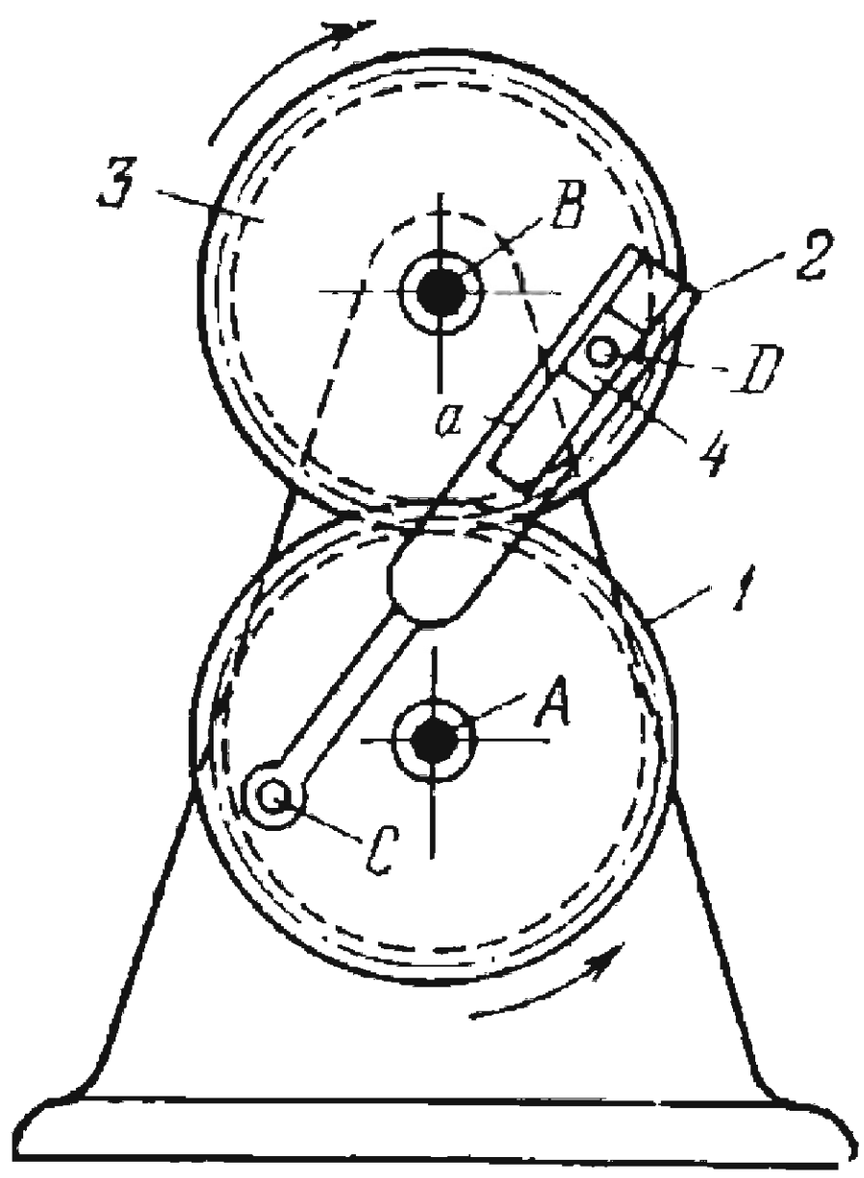

Two identical gears, *1* and *3*, rotate about fixed axes *A* and *B*. Slotted lever *2* is connected by turning pair *C* to gear *1*. Slider *4* is connected by turning pair *D* to gear *3* and moves along guide *a* of slotted lever *2*. When driving gear *1* rotates, slotted lever *2* has a complex motion.

2424	LEVER-GEAR PLANETARY MECHANISM WITH A TWO-SLOT LEVER	LrG 5L

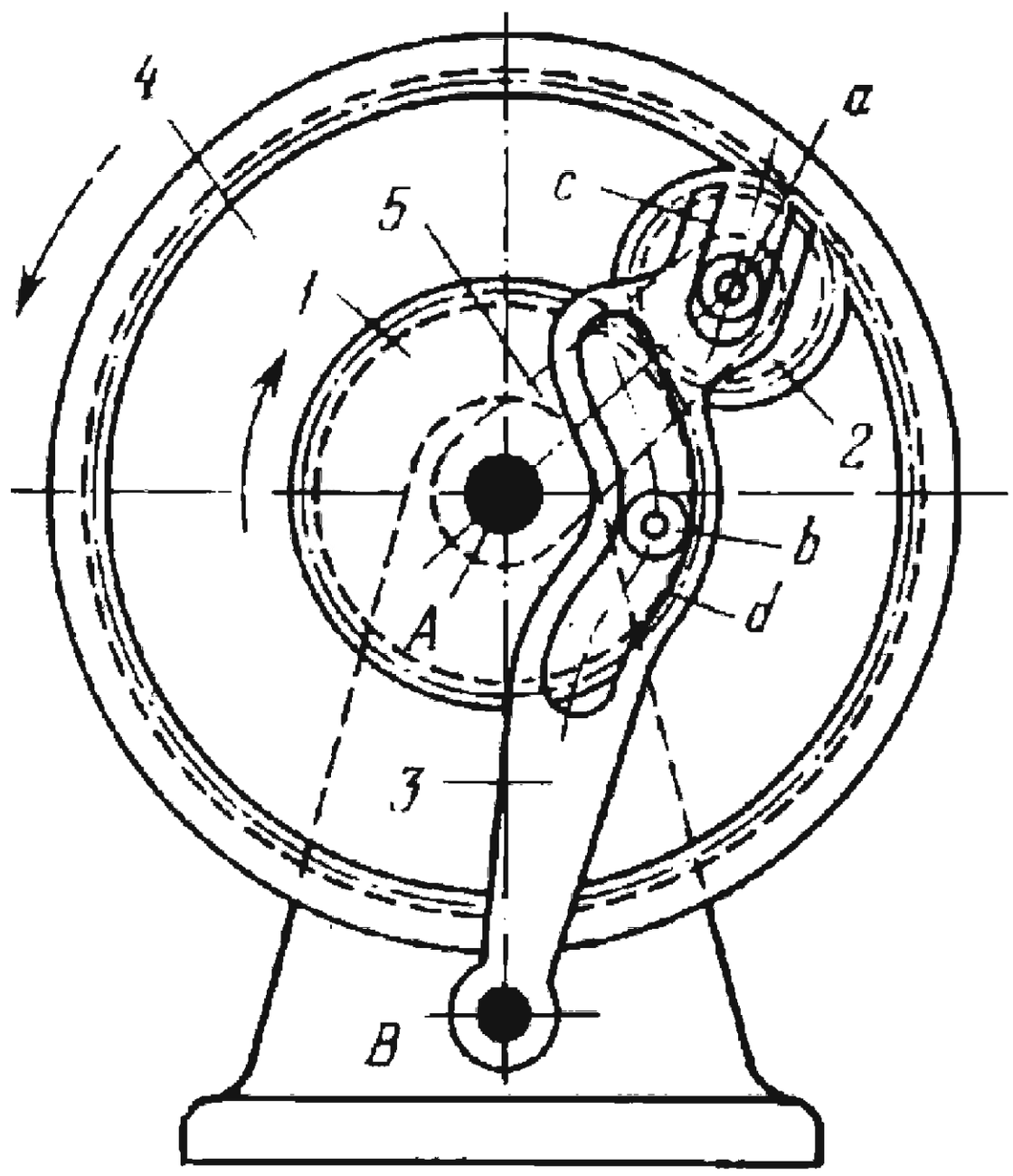

Gear *1* rotates about fixed axis *A* and meshes with planet gear *2* which, in turn, meshes with internal gear *4*. Gear *4* rotates about axis *A*. Carrier *5* rotates about axis *A* and is connected by a turning pair to planet gear *2*. Link *3* turns about fixed axis *B* and has curvilinear slot *d* and straight slot *c*. Roller *b* of gear *1* and roller *a* of planet gear *2* slide along slots *d* and *c*. When gear *1* rotates at uniform velocity, gear *4* has a complex nonuniform rotational motion, determined by the shape of curvilinear slot *d*.

2425	LEVER-GEAR PLANETARY MECHANISM WITH A STRAIGHT-SLOT LEVER	LrG 5L

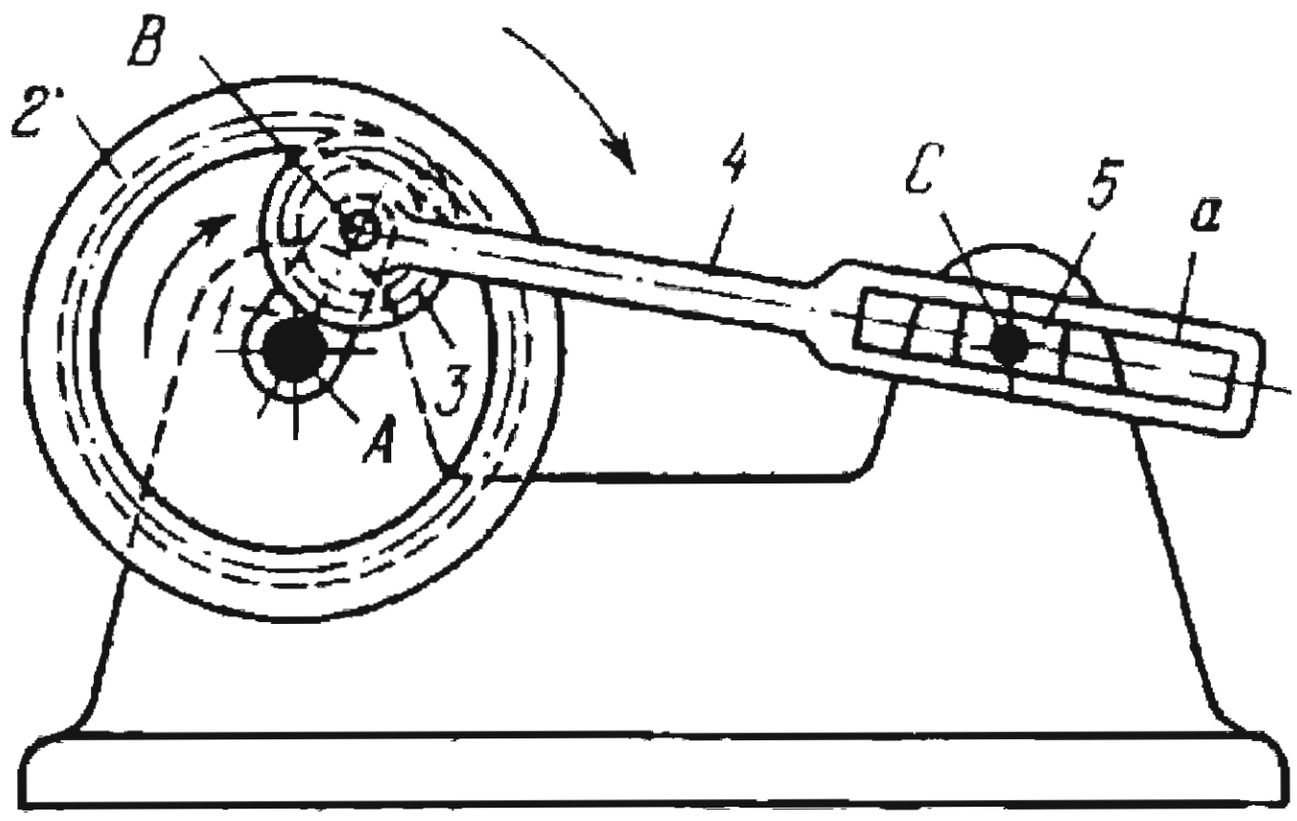

Carrier *1* rotates about fixed axis *A* and is connected by turning pair *B* to planet gear *3* which meshes with internal sun gear *2*. Gear *2* rotates about axis *A*. Link *4* is rigidly attached to (or integral with) gear *3* and has straight slot *a* which slides along slider *5*. Slider *5* turns about fixed axis *C*. When carrier *1* rotates at uniform velocity, gear *2* has a complex nonuniform rotational motion, determined by the dimensions of the links.

2426	SLIDER-CRANK MECHANISM WITH A SEGMENT GEAR AND RACK	LrG 5L

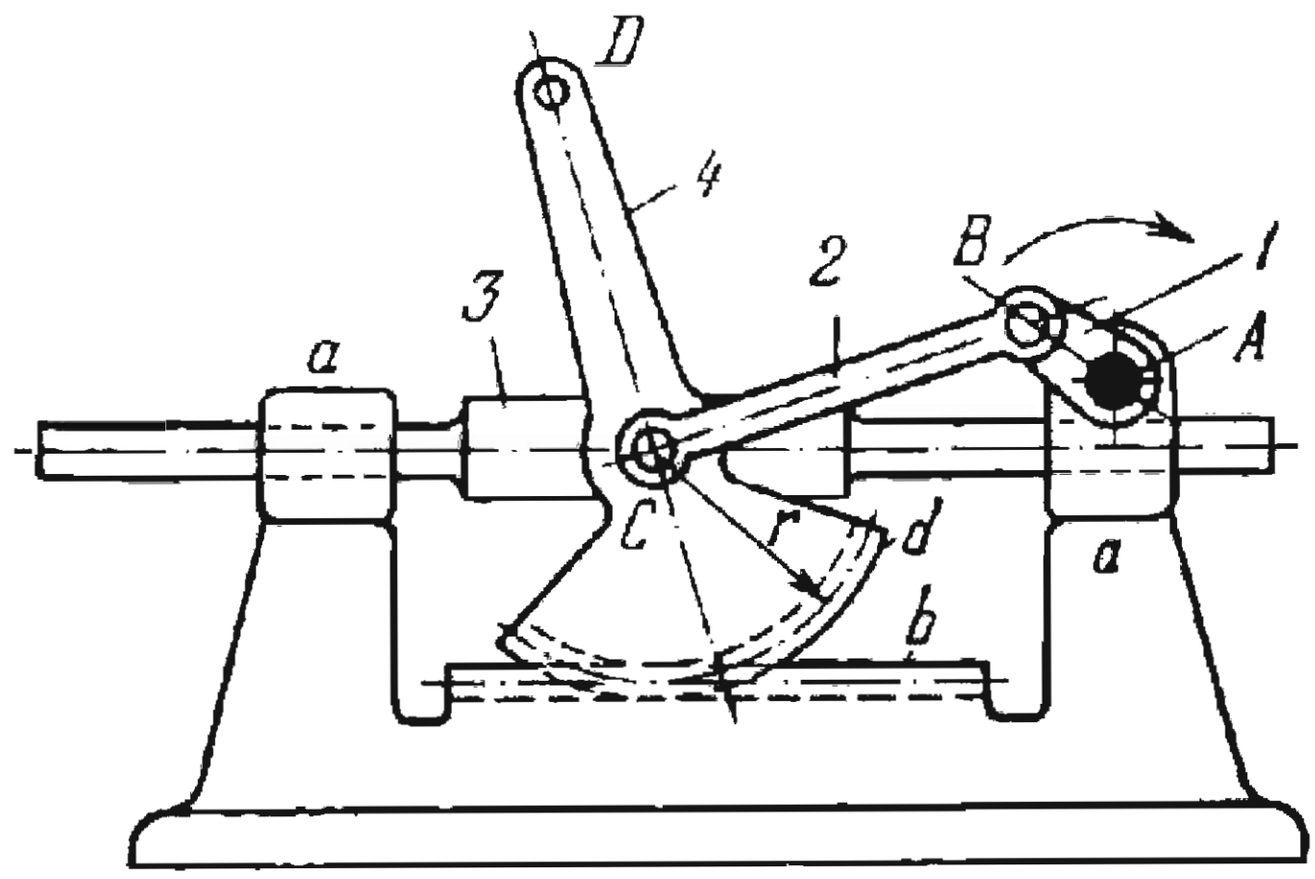

Crank *1* rotates about fixed axis *A* and is connected by turning pair *B* to connecting rod *2* which, in turn, is connected by turning pair *C* to slider *3*. Slider *3* moves along fixed guides *a-a*, and is connected by turning pair *C* to link *4* which has segment gear *d* that meshes with fixed gear rack *b*. When crank *1* rotates, segment gear *d* rolls along rack *b* and point *D* of link *4* describes cycloidal curves of a circle of radius *r*, where *r* is the pitch radius of segment gear *d*. In particular, point *D* describes a prolate cycloid.

2427	LEVER-GEAR MECHANISM WITH A DRIVING RACK	LrG 5L

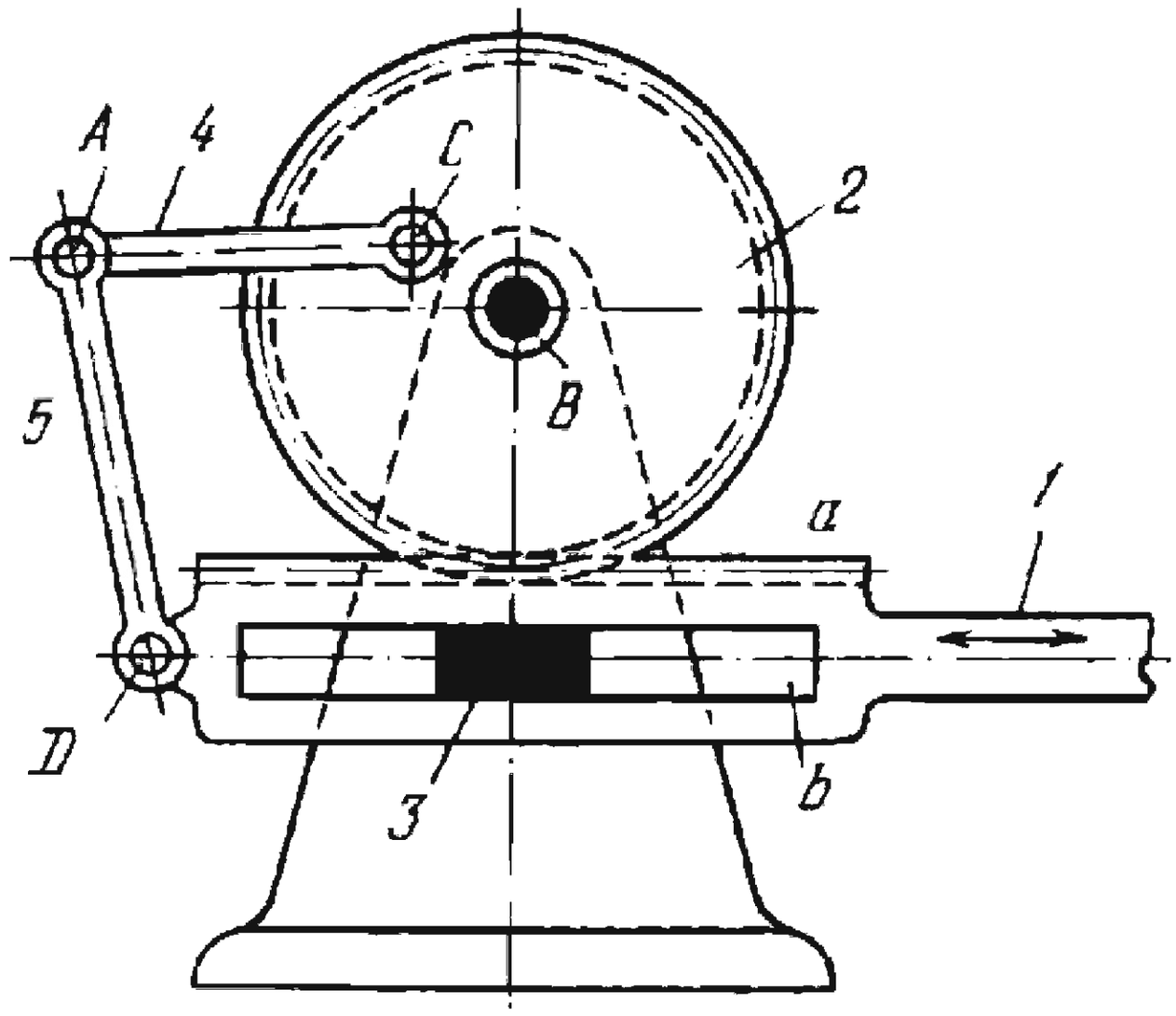

Link *1* has slot *b* which slides along fixed block *3* of the base. Gear rack *a* of link *1* meshes with gear *2* which rotates about fixed axis *B*. Links *4* and *5* are connected together by turning pair *A*, and by turning pairs *C* and *D* to gear *2* and link *1*. When driving link *1* reciprocates, links *4* and *5* have complex motions and point *A* describes a complex connecting-rod curve.

2428	LEVER-GEAR MECHANISM WITH UNIFORM MOTION OF THE DRIVEN LINK	LrG 5L

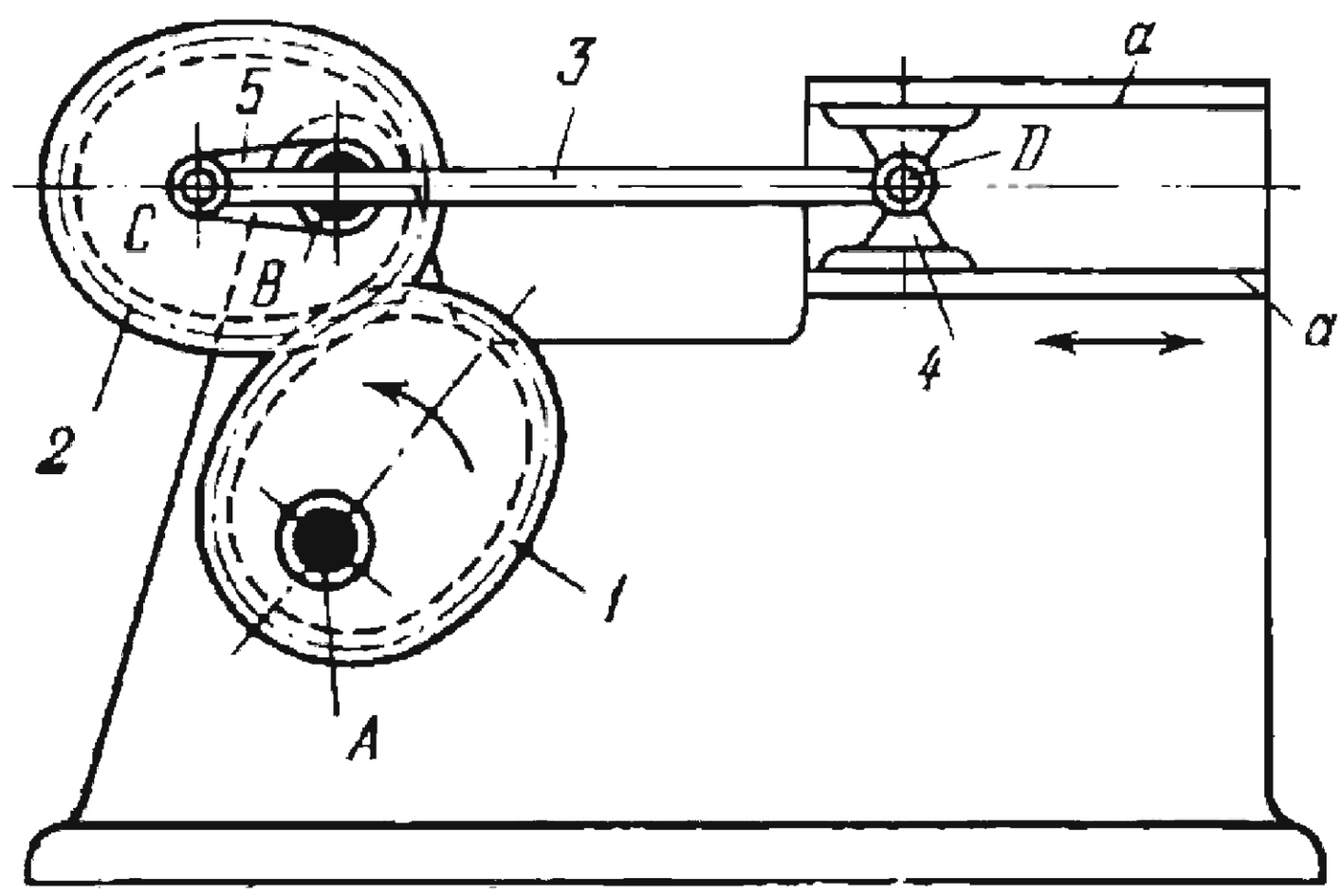

Elliptical gear *1* rotates about fixed axis *A* which passes through one focus of the ellipse. Gear *1* meshes with identical gear *2* which rotates about fixed axis *B*, also passing through a focus of the ellipse. Crank *5* is rigidly attached to gear *2*. Connecting rod *3* is connected by turning pairs *C* and *D* to crank *5* and slider *4*. Slider *4* reciprocates in fixed guides *a-a*. When gear *1* rotates at uniform velocity, slider *4* travels at the ends of its stroke at almost constant velocity.

2429	LEVER-GEAR SCOTCH-YOKE MECHANISM WITH CIRCULAR AND NONCIRCULAR GEARS	LrG 5L

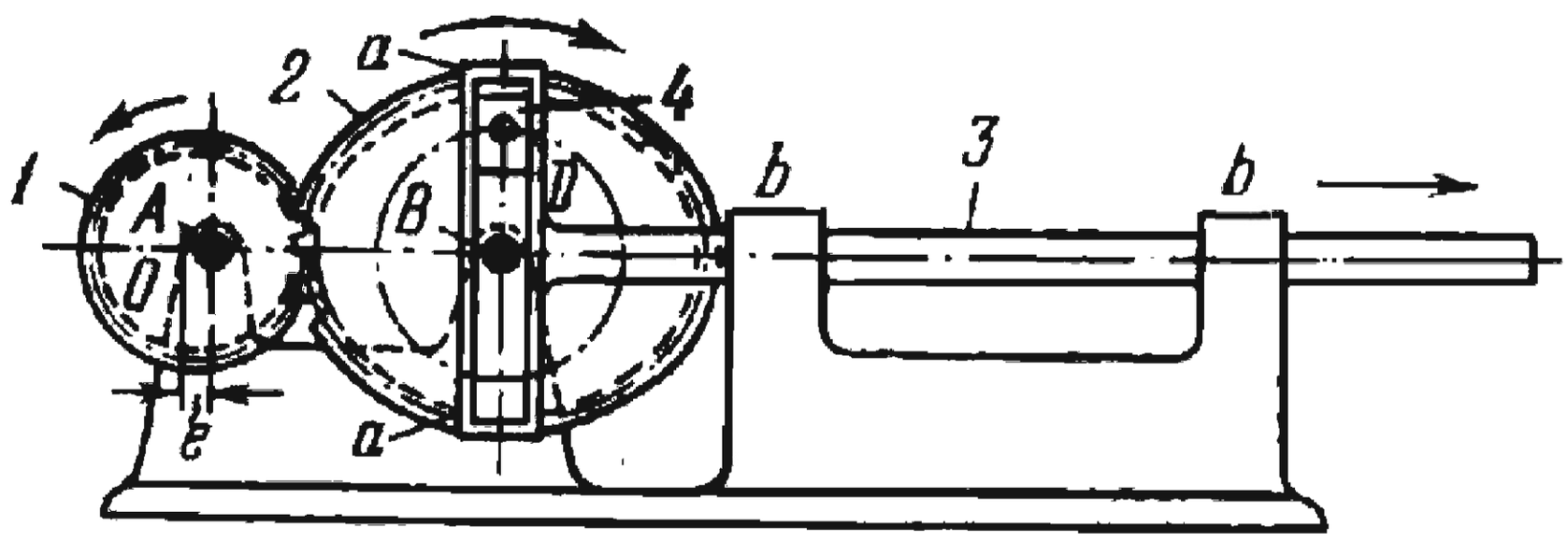

Circular gear *1* rotates about fixed axis *A*, located eccentrically with respect to the geometrical axis *O* of gear *1*, and meshes with noncircular gear *2* which rotates about fixed axis *B*. Gear *2* is of symmetric oval shape. The perimeter of the pitch curve of gear *2* is twice that of the pitch circle of gear *1*. Gear *2* is connected by turning pair *D* to slider *4* which moves along slot *a-a* of link *3*. Link *3* reciprocates in fixed guides *b-b*. The average transmission ratio in a full cycle of the mechanism is $i_{12} = \frac{\omega_1}{\omega_2} = 2$, where ω_1 and ω_2 are the angular velocities of gears *1* and *2*. When driving gear *1* rotates at uniform velocity, gear *2* rotates at nonuniform velocity, imparting a reciprocating motion to link *3* that can be varied by changing the eccentricity of gear *1*.

2430	SLOTTED-LEVER-GEAR MECHANISM WITH A SEGMENT GEAR	LrG 5L

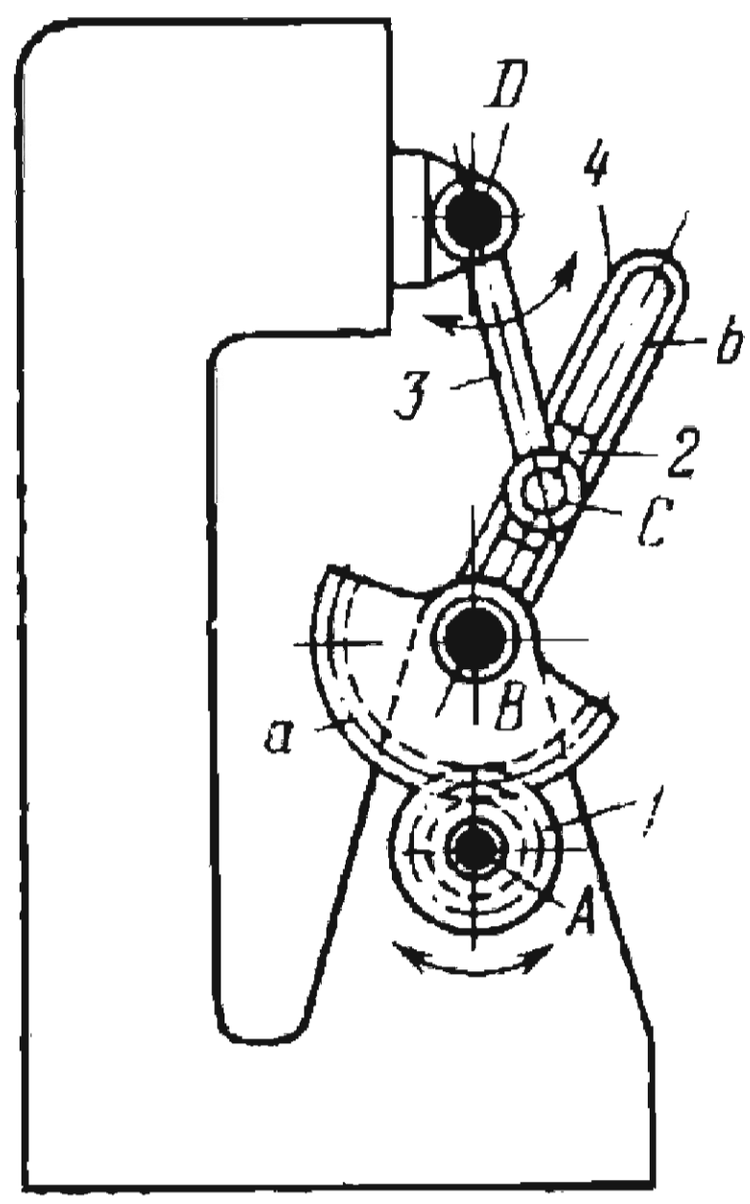

Pinion *1* rotates about fixed axis *A* and meshes with segment gear *a* of slotted lever *4* which turns about fixed axis *B*. Slider *2* moves along slot *b* of lever *4* and is connected by turning pair *C* to link *3* which turns about fixed axis *D*. When driving pinion *1* rotates alternately in opposite directions, driven link *3* oscillates about axis *D*.

2431	LEVER-GEAR SCOTCH-YOKE MECHANISM WITH ELLIPTICAL GEARS	LrG 5L

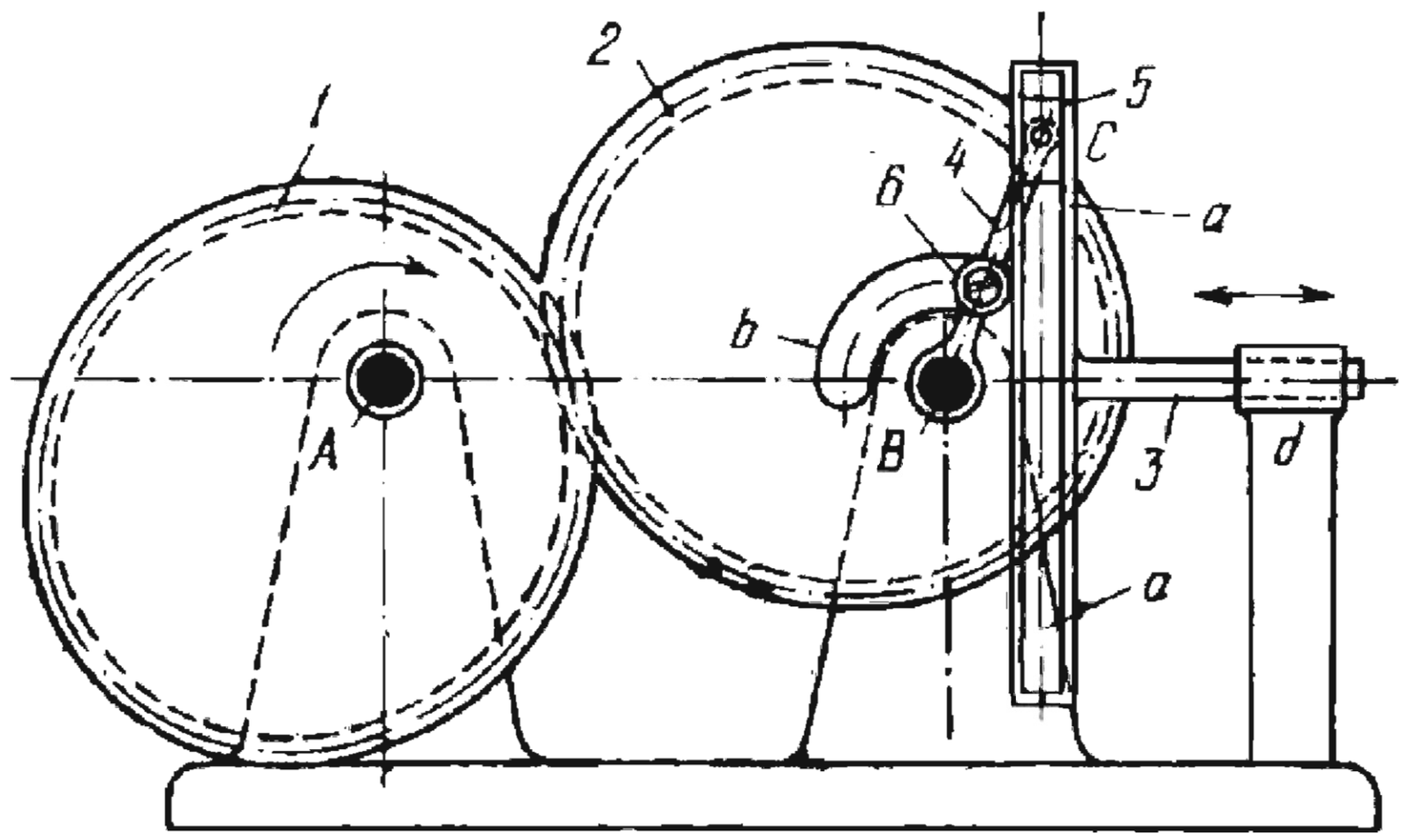

Elliptical gear *1* rotates about fixed axis *A* and meshes with an identical elliptical gear *2* which rotates about fixed axis *B*. Points *A* and *B* are foci of the elliptical pitch centrodes of gears *1* and *2*. Crank *4* is rigidly attached to gear *2* and is connected by turning pair *C* to slider *5*. Slider *5* moves along slot *a-a* of link *3* which, in turn, slides in fixed guide *d*. When driving gear *1* rotates, link *3* reciprocates. Gear *2* has a circular slot *b* for varying the motion of link *3*. The type of motion of link *3* can be changed by clamping crank *4* at various positions in slot *b* with screw *6*.

2432	LEVER-GEAR MECHANISM WITH CIRCULAR AND NONCIRCULAR GEARS AND A RETAINING SLOT	LrG 5L

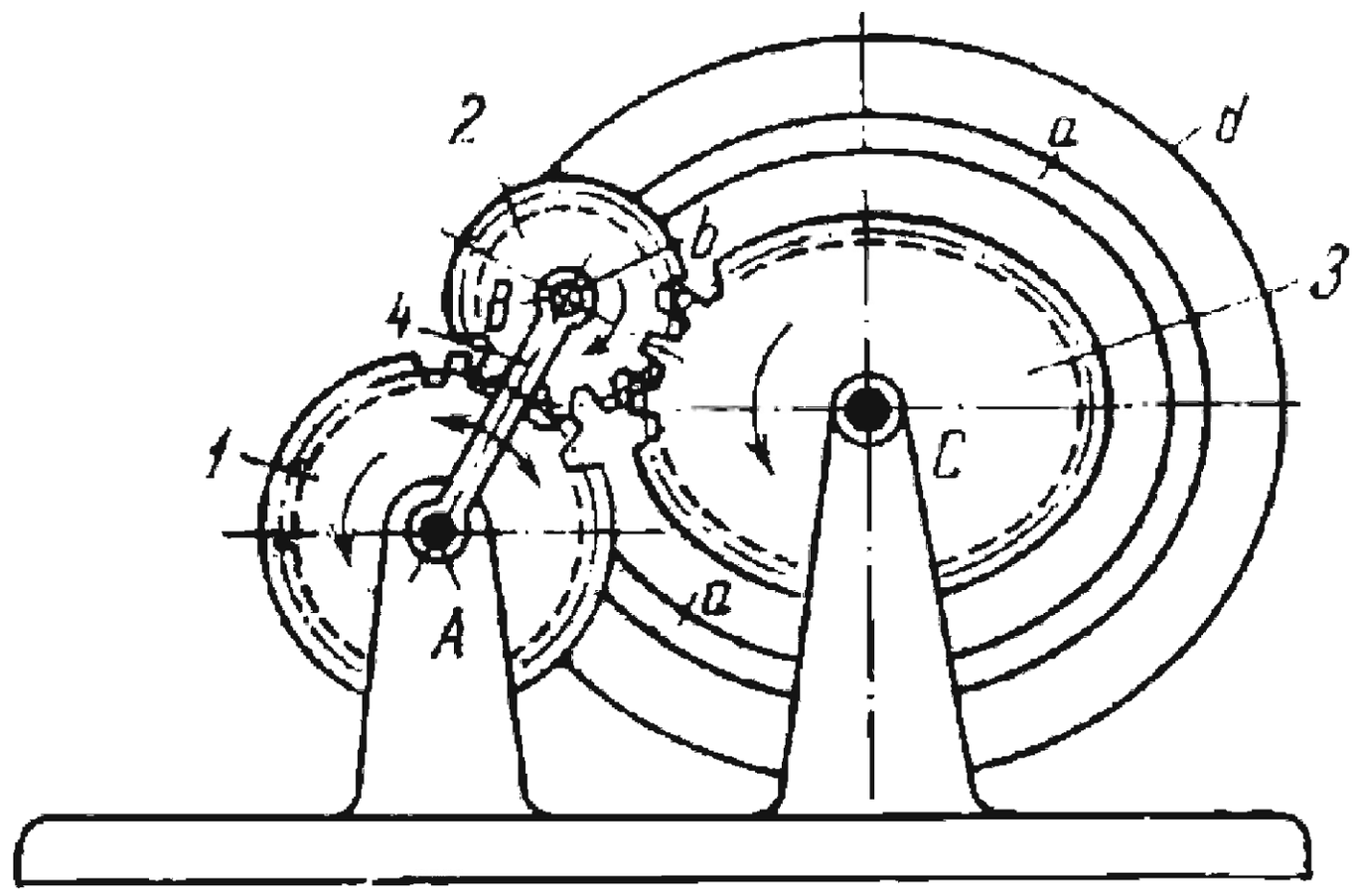

Circular gear *1* rotates about fixed axis *A* and meshes with circular gear *2* which rotates about axis *B* of link *4*. Gear *2* meshes with noncircular gear *3* which rotates about fixed axis *C*. Rigidly attached to gear *3* is disk *d* which has slot *a*. Pin *b* of link *4* slides along slot *a*. The pitch curve of gear *3* is a symmetric oval. The profile of slot *a* is also an oval, equidistant from the pitch curve of gear *3*. When driving gear *1* rotates at uniform velocity, driven gear *3* rotates with nonuniform velocity and link *4* oscillates about axis *A*.

2433	LEVER-GEAR MECHANISM WITH CIRCULAR AND NONCIRCULAR GEARS	LrG 5L

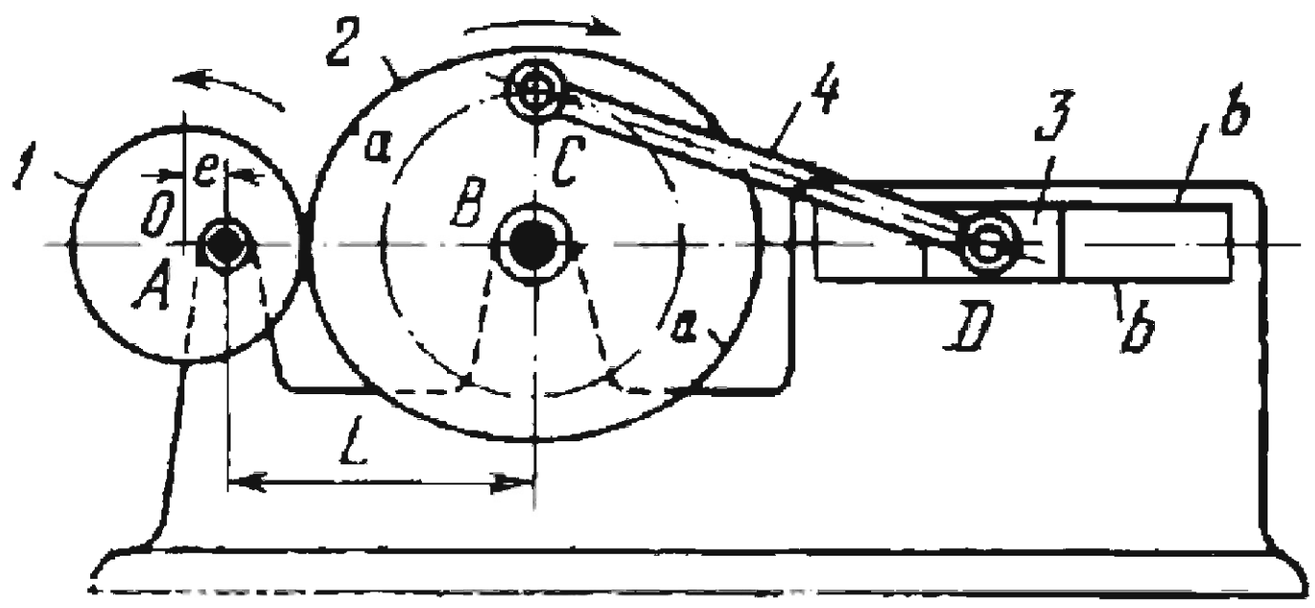

Circular gear *1* rotates about fixed axis *A*, located at the distance *e* from the geometric axis *O* of gear *1*. Noncircular gear *2* rotates about fixed axis *B*. The shapes of the pitch centrodes of gears *1* and *2* comply with the conditions: the shape of the centrode of gear *1* is a circle with the perimeter $2\pi r$, where *r* is the pitch radius of gear *1*; and the centrode of gear *2* is composed of two identical symmetrical arcs *a*, each of the length $2\pi r$. The average transmission ratio of the gearing in a full cycle of motion is $i_{12} = 2$. During the cycle the transmission ratio varies within the limits from

$$i_{\min} = \frac{1-\varepsilon}{m-(1-\varepsilon)} \quad \text{to} \quad i_{\max} = \frac{1+\varepsilon}{m-(1+\varepsilon)}$$

where $\varepsilon = \frac{e}{r}$, $m = \frac{L}{r}$, and *L* is the distance between centres *A* and *B*. Connecting rod *4* is connected by turning pairs *C* and *D* to gear *2* and slider *3*. Slider *3* moves along fixed guides *b-b*. The required motion of slider *3* can be obtained by varying the eccentricity *e*.

2434	LEVER-GEAR MECHANISM OF A ROMAN DRIVE	LrG / ML

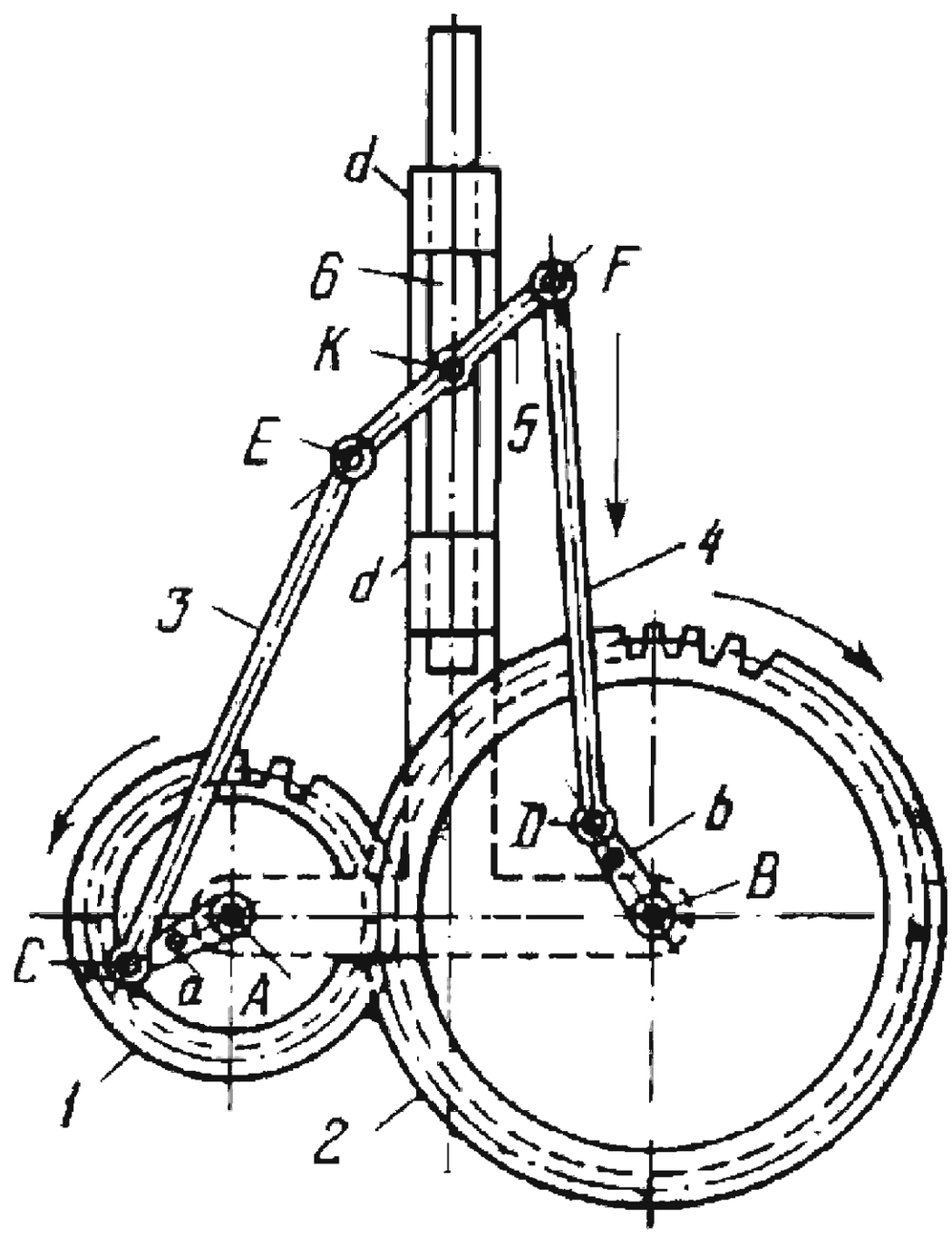

Meshing gears *1* and *2* rotate about fixed axes *A* and *B*. Cranks *a* and *b* can be rigidly attached to gears *1* and *2* at various angles to the line joining points *A* and *B*. Connecting rods *3* and *4* are connected by turning pairs *C* and *D* to gears *1* and *2*, and by turning pairs *E* and *F* to crossbeam *5* which, in turn, is connected by turning pair *K* to slider *6*. Slider *6* moves along guides *d-d*. The lengths of the links comply with the conditions: $\overline{AC} = \overline{BD}$, $\overline{CE} = \overline{DF}$ and $\overline{KE} = \overline{KF}$. The required stroke of slider *6* can be obtained by changing the sizes of gears *1* and *2*, and by clamping cranks *a* and *b* at various angles to line *AB*.

2435	LEVER-GEAR MECHANISM WITH A CAM SLOT	LrG ML

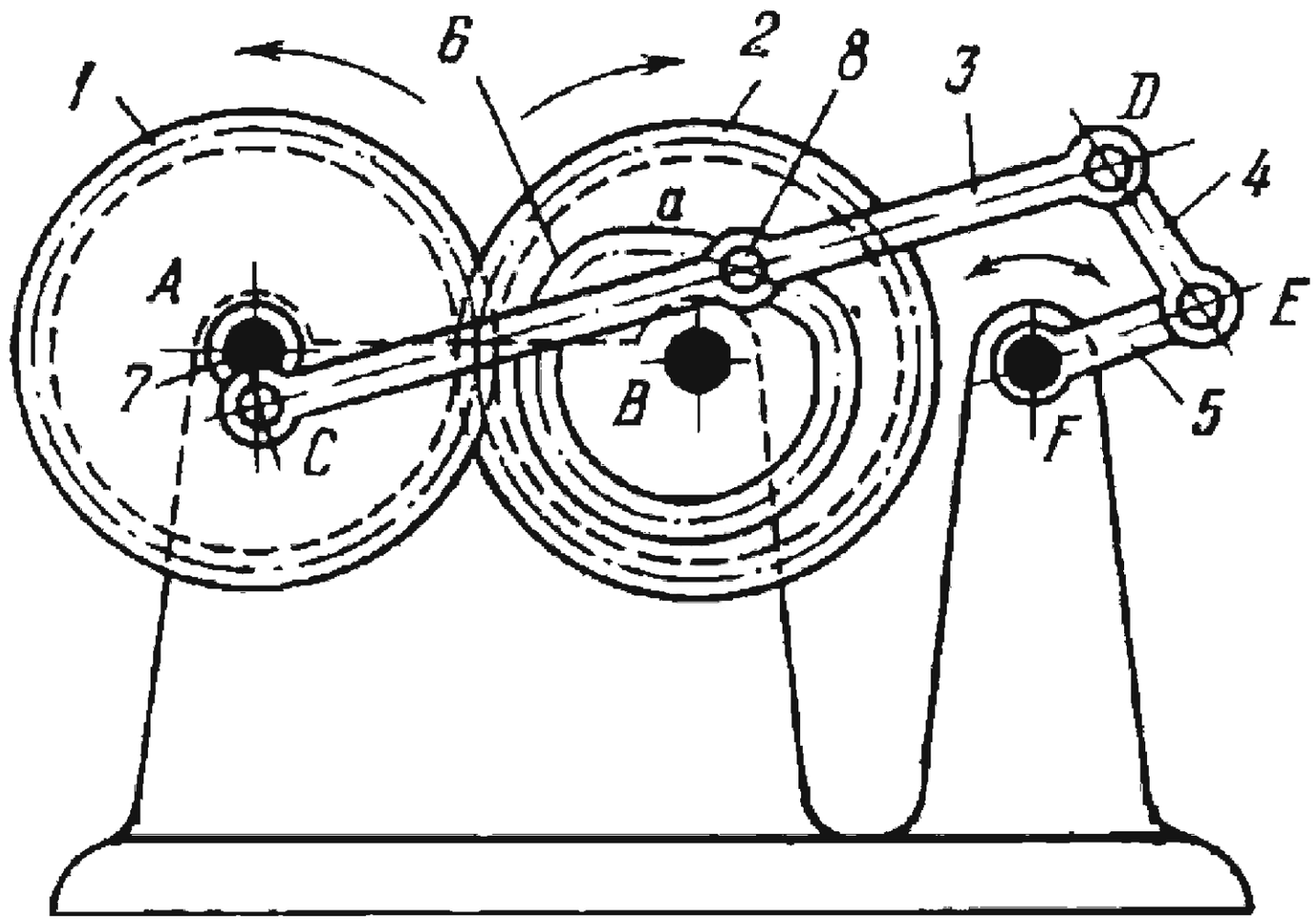

Gear *1* rotates about fixed axis *A* and meshes with gear *2* which rotates about fixed axis *B*. Gears *1* and *2* have equal pitch radii. Rigidly attached to gear *1* is crank *7* which is connected by turning pair *C* to link *3*. Pin *8* of link *3* slides along slot *a* of face cam *6* which is rigidly attached to (or integral with) gear *2*. Link *3* is connected by turning pair *D* to link *4* which, in turn, is connected by turning pair *E* to lever *5*. Lever *5* rotates about fixed axis *F*. When gear *1* rotates, lever *5* has an oscillating motion. The required kind of motion of this lever can be obtained by properly designing the shape of slot *a* of cam *6*.

2436	LEVER-GEAR SLIDER-DRIVE MECHANISM	LrG ML

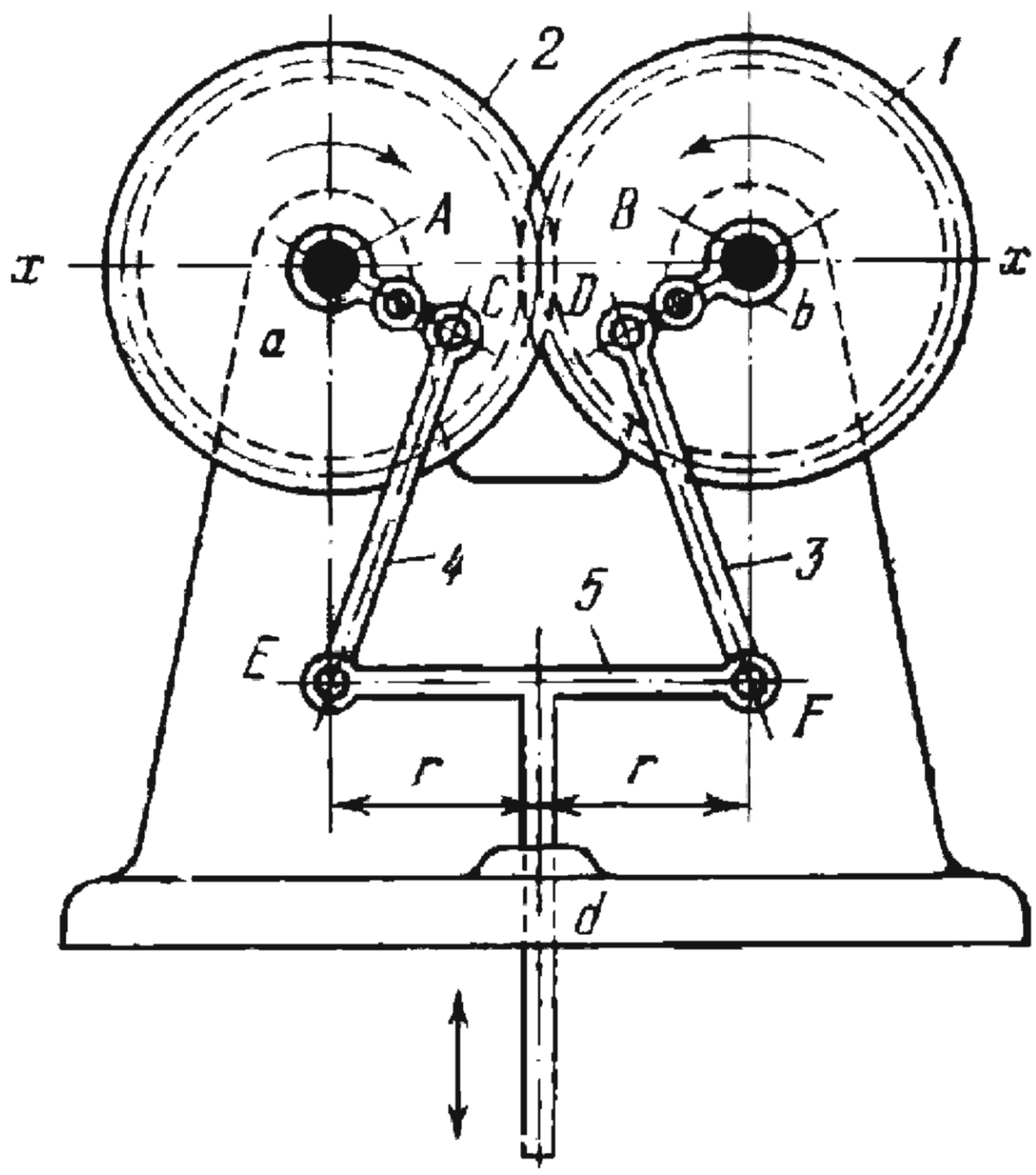

Gears *1* and *2* mesh with each other and rotate about fixed axes *B* and *A*. Cranks *b* and *a* are rigidly attached to gears *1* and *2* and are connected by turning pairs *D* and *C* to connecting rods *3* and *4* which, in turn, are connected by turning pairs *F* and *E* to T-shaped slider *5*. Slider *5* moves in fixed guide *d* whose axis is perpendicular to axis *x-x*. The dimensions of the links comply with the conditions: $r_1 = r_2 = r$, where r_1 and r_2 are the pitch radii of gears *1* and *2*, $\overline{AC} = \overline{BD}$, and $\overline{CE} = \overline{DF}$. The angles of inclination of lines *AC* and *BD* to axis *x-x* are always equal and symmetrical. When gear *1* rotates, slider *5* reciprocates with the motion of the slider of an aligned slider-crank mechanism. If in the given version the masses of gears *1* and *2* and of connecting rods *3* and *4* are the same there is no pressure exerted by the inertia forces on guide *d*.

2437	LEVER-GEAR MECHANISM WITH VARIABLE SLIDER MOTION	LrG ML

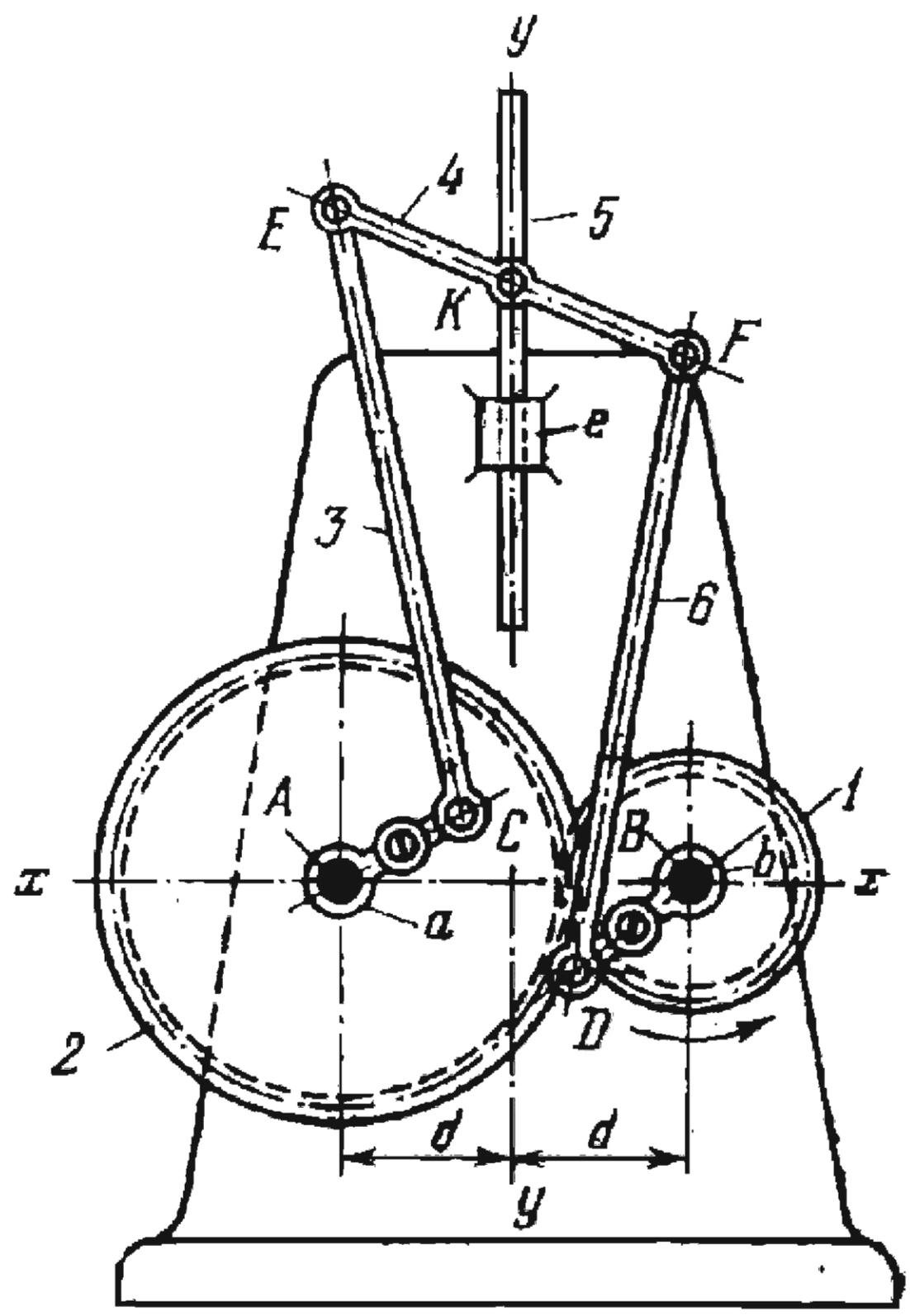

Gears *1* and *2* mesh with each other and rotate about fixed axes *B* and *A*. Cranks *b* and *a* are rigidly attached to gears *1* and *2*, and are connected by turning pairs *D* and *C* to connecting rods *6* and *3* which, in turn, are connected by turning pairs *F* and *E* to crossbeam *4*. Crossbeam *4* is connected by turning pair *K* to slider *5* which moves in fixed guide *e* along axis *y-y*. The dimensions of the links comply with the conditions: $r_2 = 2r_1$, $\overline{AC} = \overline{BD}$, $\overline{CE} = \overline{DF}$, and $\overline{EK} = \overline{FK}$. In the initial position, the angles made by lines *AC* and *BD* with axis *x-x* are equal and symmetrical. The required kind of motion of slider *5* can be obtained by clamping cranks *a* and *b* at various positions on gears *2* and *1*.

2438	SLIDER-CRANK MECHANISM WITH UNIFORM SLIDER MOTION	LrG ML

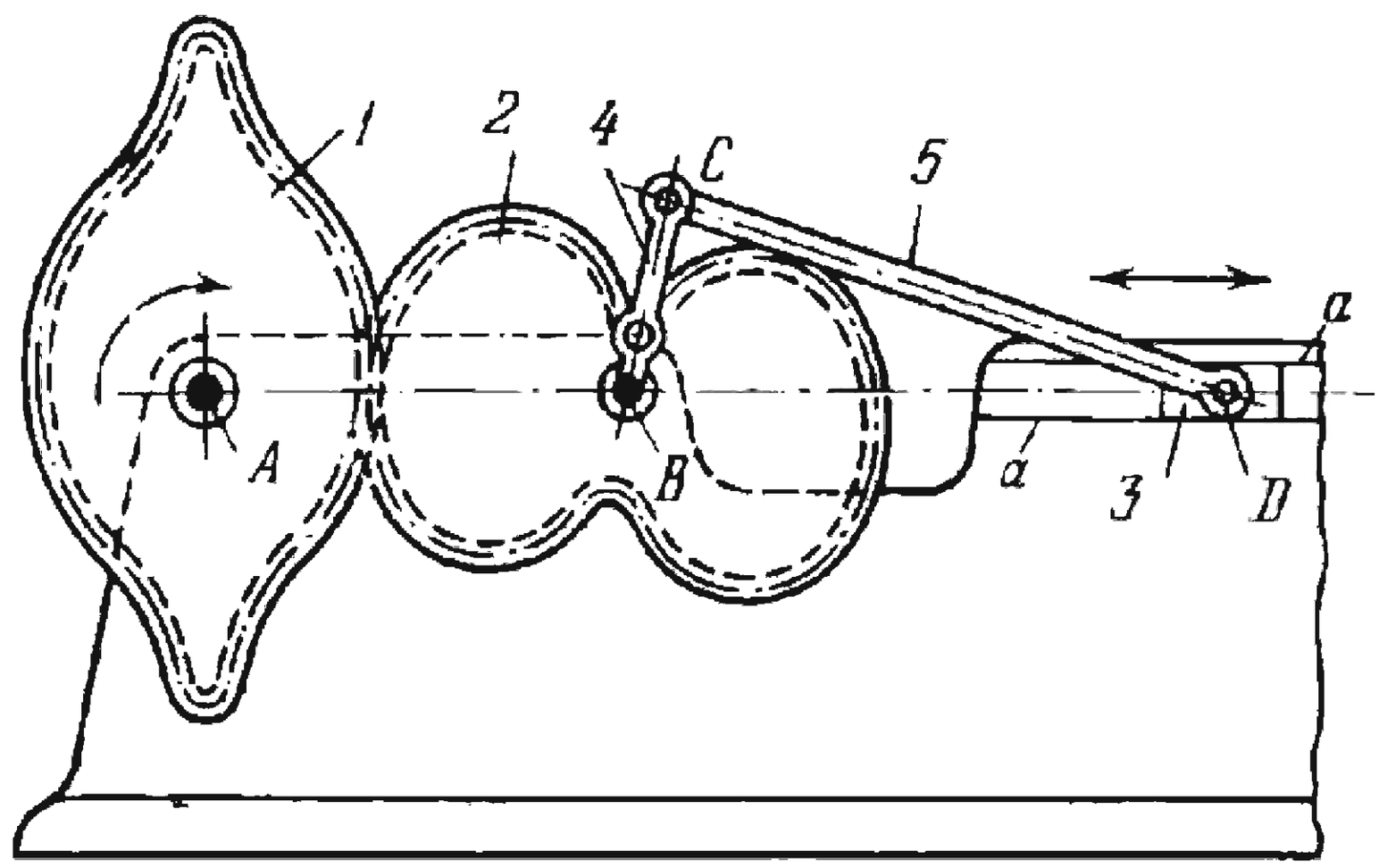

Noncircular gear *1* rotates about fixed axis *A* and meshes with noncircular gear *2* which rotates about fixed axis *B*. Crank *4* of slider-crank linkage *BCD* is rigidly attached to gear *2* and is connected by turning pair *C* to connecting rod *5*. Connecting rod *5* is connected by turning pair *D* to slider *3* which moves along fixed guide *a-a*. The pitch centrodes of gears *1* and *2* are designed so that when gear *1* rotates at uniform velocity, slider *3* reciprocates at uniform velocity in its forward and return strokes.

2439	LEVER-GEAR PLANETARY SLIDER-CRANK MECHANISM	LrG ML

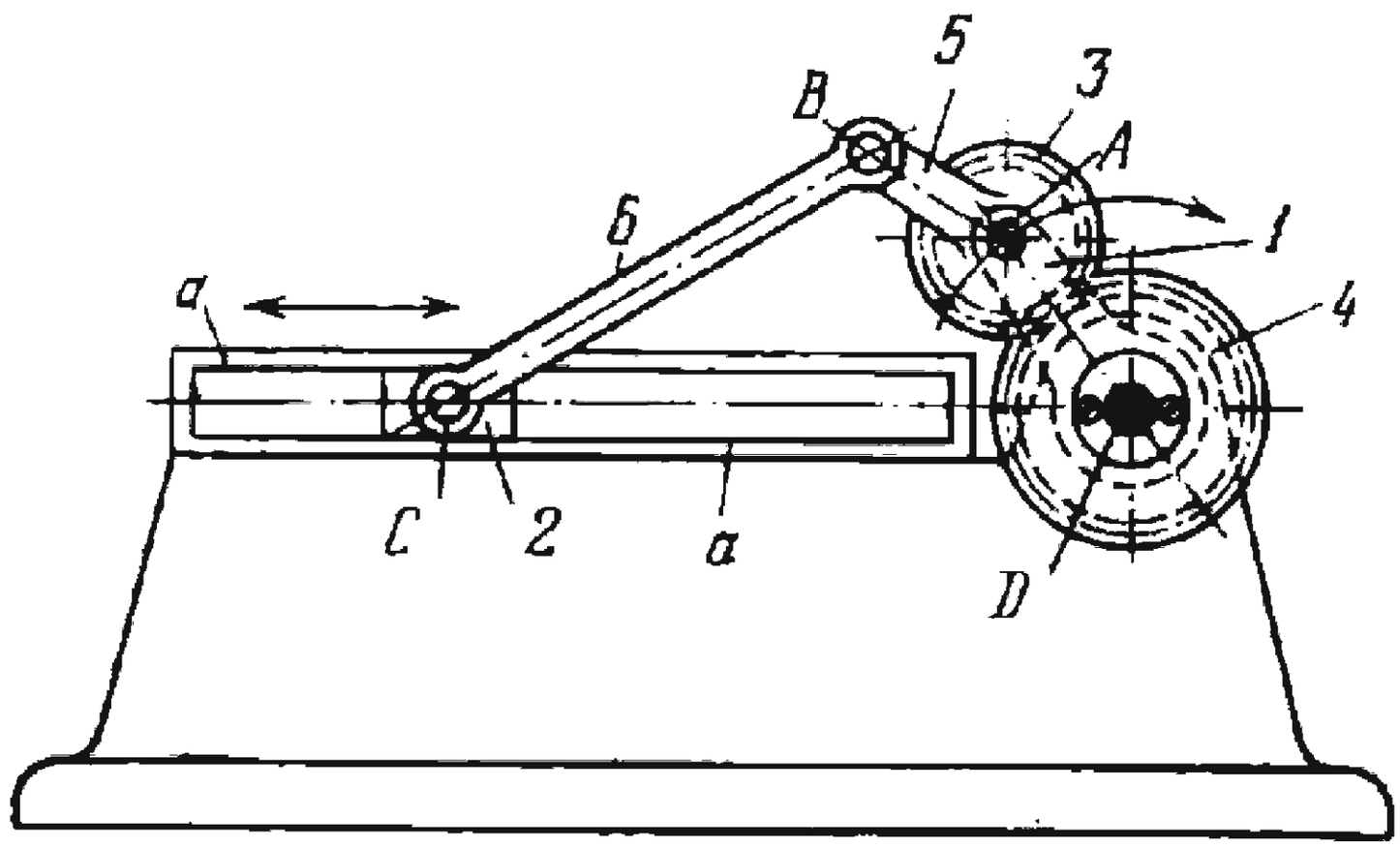

Link *1* rotates about fixed axis *D* and is connected by turning pair *A* to planet gear *3* which meshes with fixed sun gear *4*. Link *5* is rigidly attached to (or integral with) gear *3* and is connected by turning pair *B* to connecting rod *6* which, in turn, is connected by turning pair *C* to slider *2*. Slider *2* moves along fixed guides *a-a*. When gear *3* rolls around gear *4*, point *B* describes a prolate epicycloid of the pitch circle of gear *4* if $\overline{AB} > r_3$, where r_3 is the pitch radius of gear *3*. If $\overline{AB} = r_3$, then point *B* describes an epicycloid and, finally, if $\overline{AB} < r_3$, then point *B* describes a curtate epicycloid. The transmission ratio from link *1* to link *5*, $i_{15} = \frac{\omega_1}{\omega_5}$, where ω_1 and ω_5 are the angular velocities of links *1* and *5*, is equal to

$$i_{15} = \frac{1}{1 - i_{34}} = \frac{z_3}{z_3 + z_4}$$

where $i_{34} = -\frac{z_4}{z_3}$ and z_3 and z_4 are the numbers of teeth of gears *3* and *4*. The required kind of motion of slider 2 is obtained by selecting the proper ratio between the numbers of teeth z_3 and z_4, and varying the length $\overline{AB}$. At $\overline{AB} = r_3 = r_4$, where r_4 is the pitch radius of gear *4*, point *B* describes a cardioid of a circle of radius r_4.

2440	SLOTTED-LEVER-GEAR PLANETARY MECHANISM WITH SHORT REVERSE MOTIONS OF THE DRIVEN LINK	LrG ML

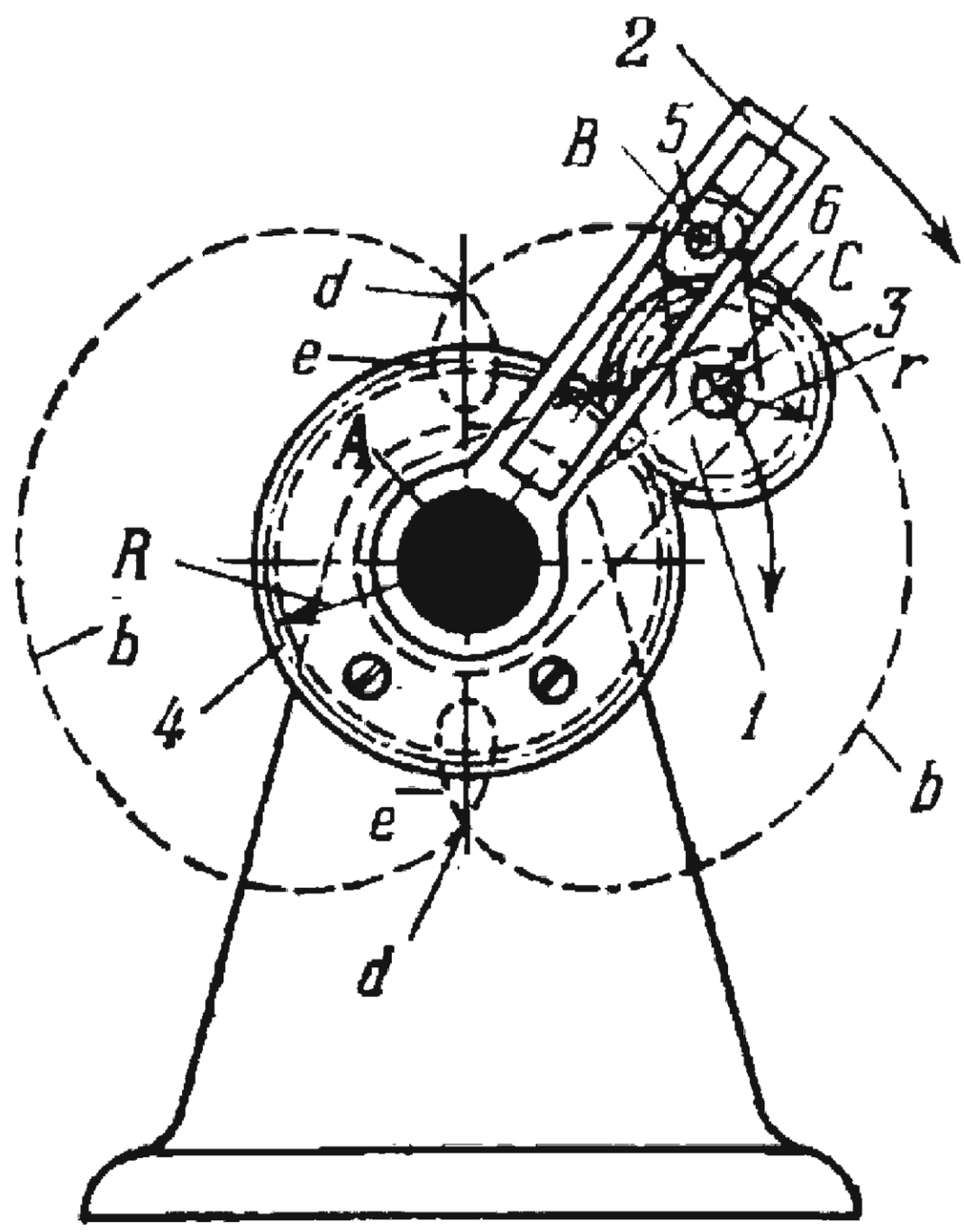

Carrier *1* rotates about fixed axis *A* and is connected by turning pair *C* to planet gear *3* which meshes with fixed sun gear *4*. Crank *6* is rigidly attached to (or integral with) planet gear *3* and is connected by turning pair *B* to slider *5*. Slider *5* moves along the slot of slotted lever *2* which rotates about axis *A*. The pitch radius of gear *4* equals $R = 2r$, where r is the pitch radius of planet gear *3*. The axis of the slot of lever *2* passes through axis *A*. If length $\overline{CB}$ of crank *6* is greater than pitch radius r, point *B* describes prolate epicycloid *b-b* which is self-intersecting at two points *d*. To one revolution of carrier *1*, link *2* has two short reverse motions when point *B* travels along the portions of the epicycloid which form loops *e*.

2441

LEVER-GEAR MECHANISM FOR ADJUSTING CRANK THROW

LrG
ML

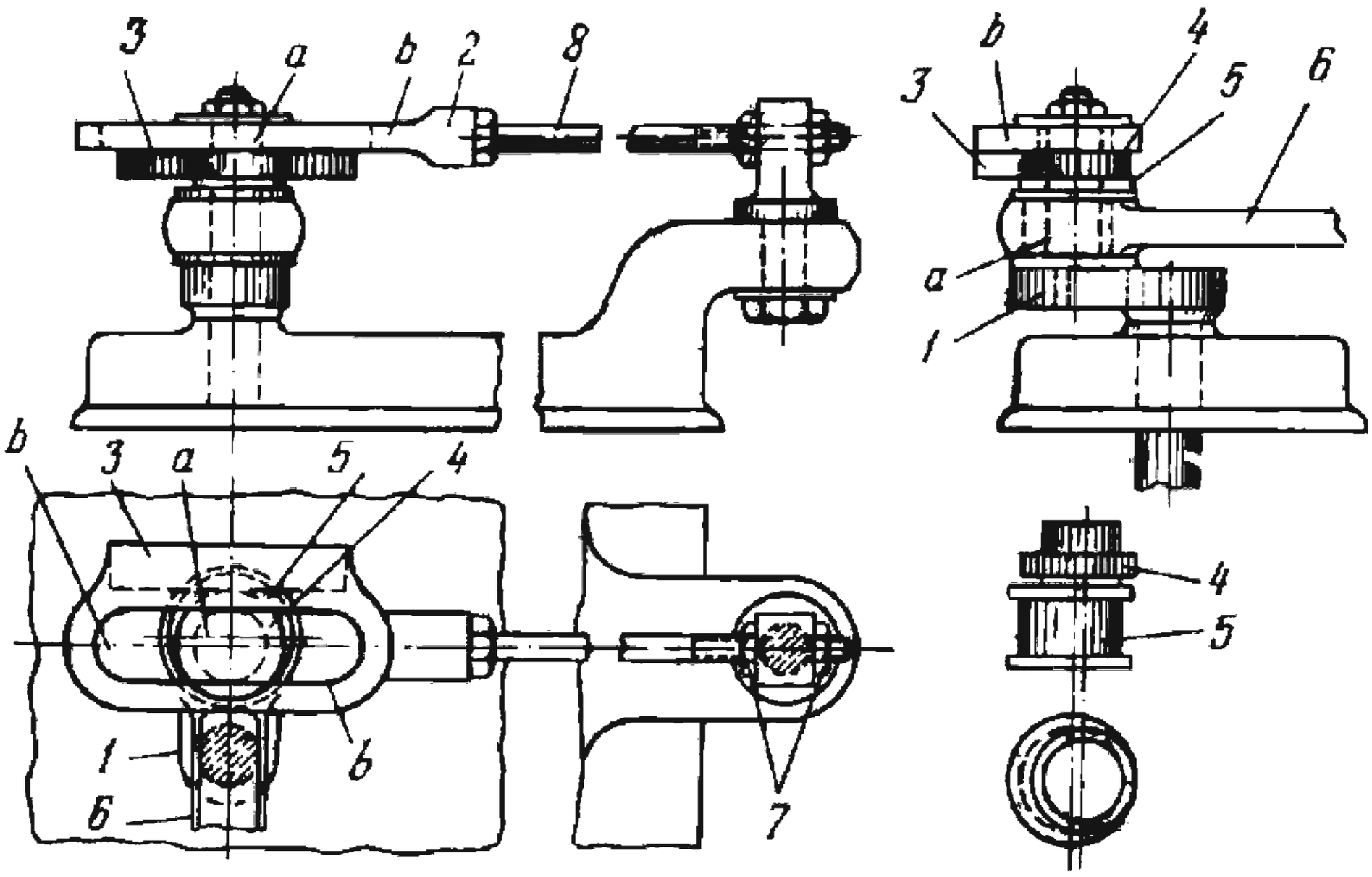

Fitted on pin *a* of crank *1* is eccentric bushing *5*. The outer surface of bushing *5*, eccentric to the bore, fits the bearing of connecting rod *6* which is connected to the driven link (not shown). The hub of bushing *5* is concentric to the bore and carries gear *4*. Thus the axis of gear *4* coincides with that of pin *a* of crank *1*. Gear *4* meshes with rack *3* which is rigidly attached to yoke *2* whose slot *b* slides along the extension of pin *a* of the crank. The number of teeth of gear *4* is designed so that when crank *1* turns through 180°, eccentric bushing *5* turns through 180° in the opposite direction. The stroke of connecting rod *6* depends on the throw of crank *1*, i.e. on the relative position of crank *1* and bushing *5*. This is changed when rack *3* is shifted by readjusting nuts *7* on rod *8*.

2442	LEVER-GEAR MECHANISM FOR ADJUSTING THE POSITION OF A RECIPROCATING SLIDE WHILE THE DEVICE IS RUNNING	LrG ML

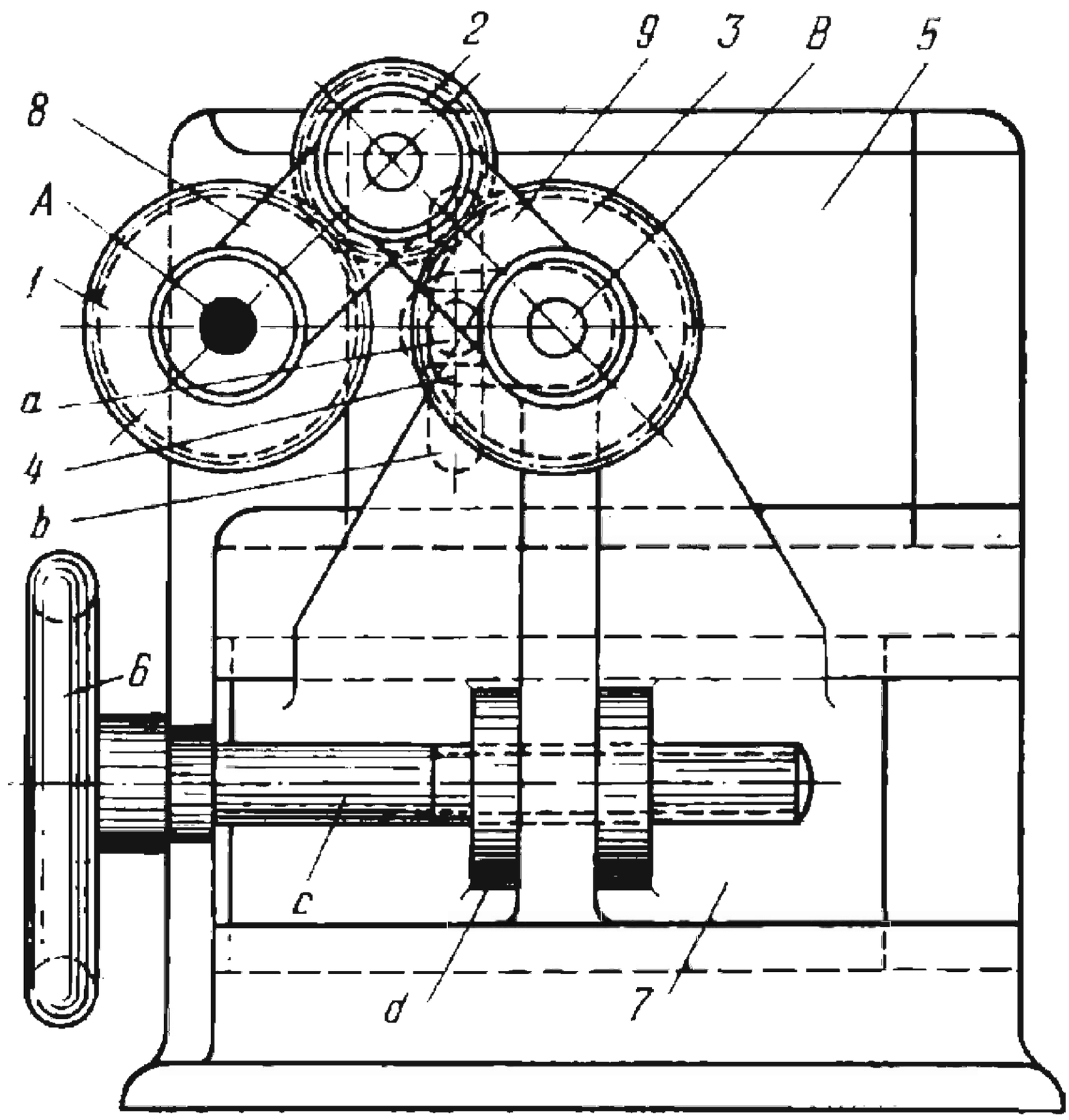

Rotation of gear *1* about fixed axis *A* is transmitted through gear *2* to gear *3* which rotates about axis *B*. Crank *4* is rigidly attached to gear *3* and its roll *a* slides along groove *b* in slide *5*, thereby reciprocating the slide. The position of slide *5*, i.e. the positions of its right- and left-hand points of reversal can be changed without stopping the device by turning handwheel *6*. This turns feedscrew *c* in nut *d*, cast integral with slide *7*, moving the slide together with axis *B* of gear *3* and crank *4* to the right or left. Links *8* and *9* keep gears *1*, *2* and *3* in mesh when the distance between axes *A* and *B* is changed.

2443	SLOTTED-LEVER-GEAR MECHANISM FOR CONVERTING ROTATION INTO OSCILLATION	LrG ML

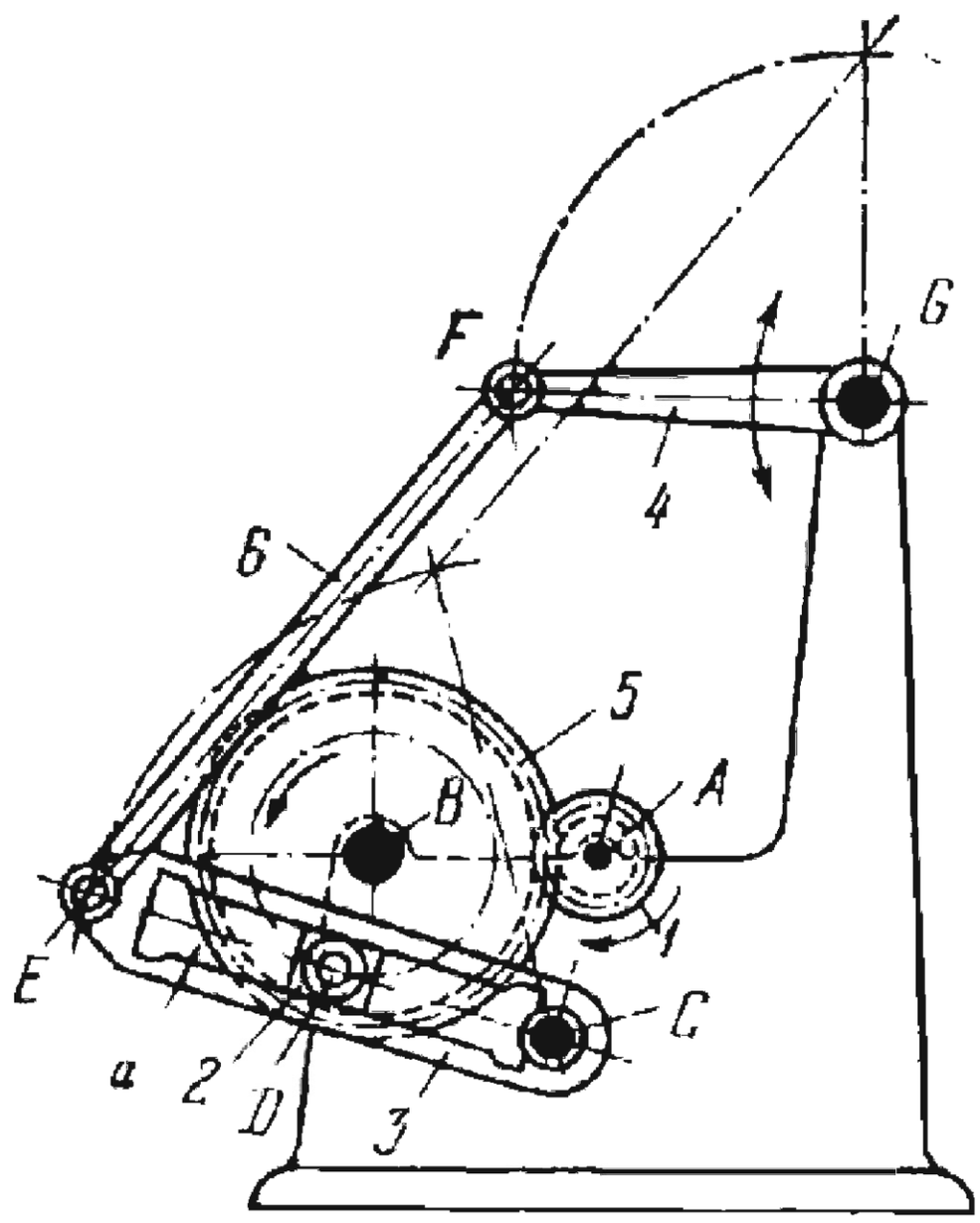

Pinion *1* rotates about fixed axis *A* and meshes with gear *5* which rotates about fixed axis *B*. Gear *5* is connected by turning pair *D* to slider *2* which moves along slot *a* of slotted lever *3*. Link *6* is connected by turning pairs *E* and *F* to lever *3* and to rocker arm *4* which turn about fixed axes *C* and *G*. When driving pinion *1* rotates at uniform velocity, oscillating motion is transmitted to rocker arm *4* with different average velocities of the forward and return strokes.

2444	LEVER-GEAR MECHANISM FOR VARIABLE RECIPROCATING MOTION OF A SLIDE	LrG ML

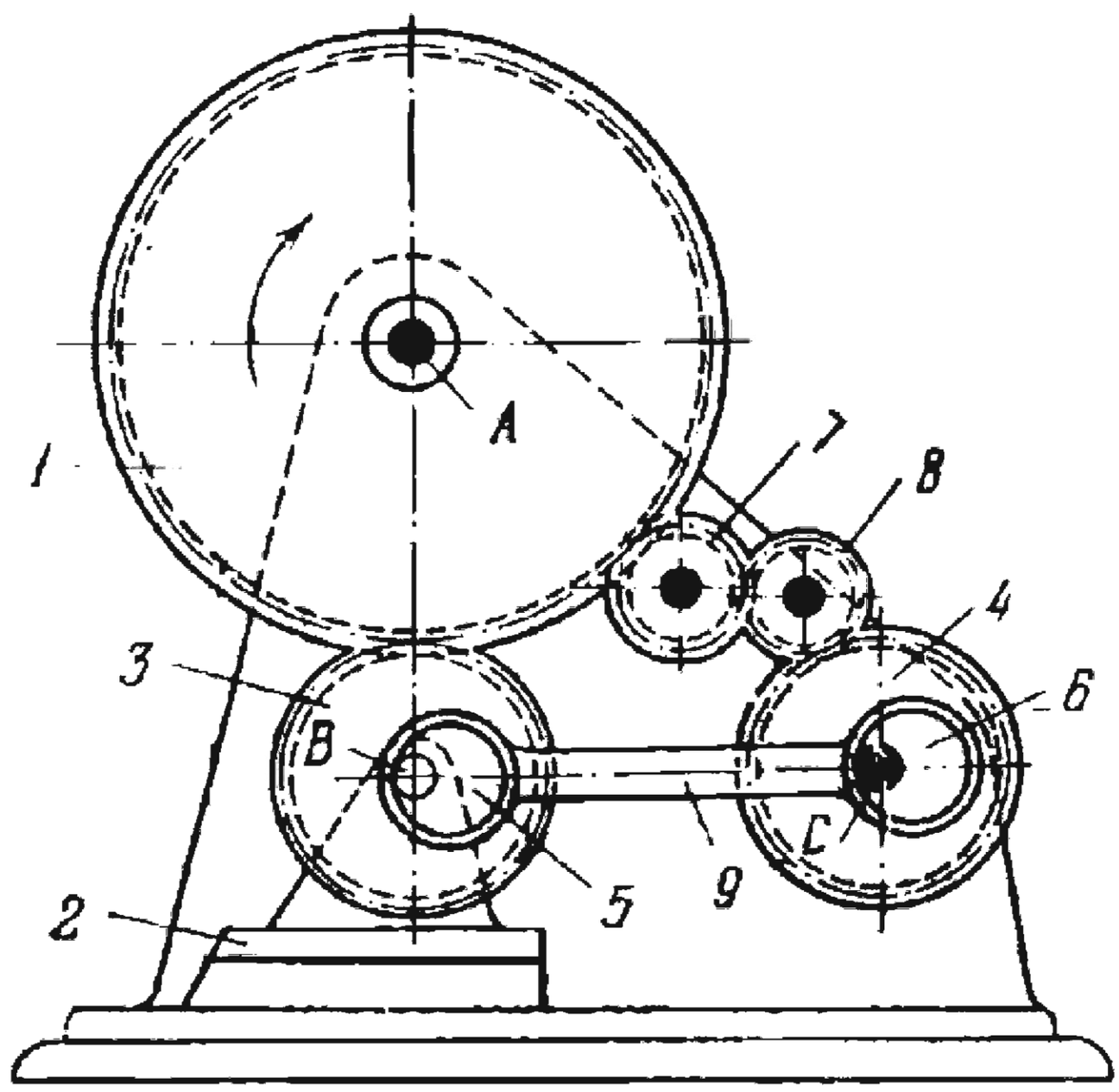

Gear *1* rotates about fixed axis *A* and meshes with gear *3* which rotates about axis *B* of slide *2*. Through intermediate gears *7* and *8*, gear *1* drives gear *4* which rotates about fixed axis *C*. Eccentrics *5* and *6* are rigidly attached to gears *3* and *4* and rotate with these gears when they are driven from gear *1*. Due to the difference in the numbers of teeth of gears *3* and *4*, the relative positions of the two eccentrics gradually change, thereby varying the stroke of slide *2* which is reciprocated by link *9*. The stroke of slide *2* gradually increases from zero to the maximum value and then gradually decreases to zero again. The change in the centre-to-centre distance between gears *3* and *4* does not interfere with tooth action because involute gearing is used.

2445	LEVER-GEAR SCOTCH-YOKE MECHANISM WITH APPROXIMATELY UNIFORM SLIDER MOTION	LrG ML

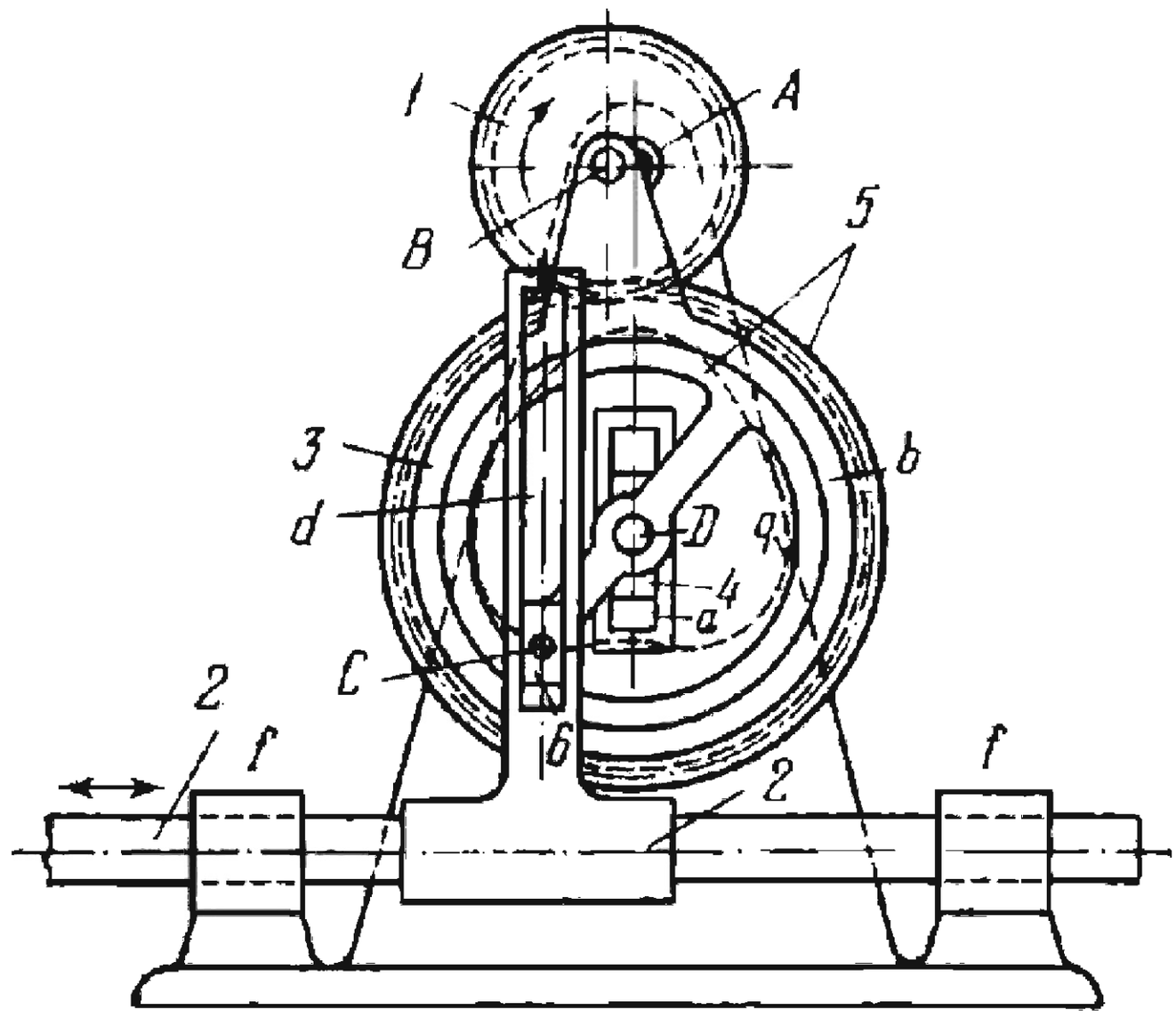

Eccentrically mounted circular gear *1* rotates about fixed axis *A* and meshes with gear *5* which rotates about axis *D* of slider *4*. Slider *4* moves along guide *a* in the base. Gear *1* is connected by turning pair *B* to link *3* which has collar *b* connected by a turning pair to gear *5*. Gear *5* is connected by turning pair *C* to slider *6* which moves along slot *d* of slider *2*. Slider *2* moves in fixed guides *f-f*. The dimensions of the links comply with the conditions: $r_5 = 2r_1$, $\overline{AB} = 0.125r_1$, $\overline{BD} = 3r_1$ and $\overline{DC} = r_1$. Point *C* describes curve *q*. When gear *1* rotates at uniform velocity, slider *2* travels with approximately uniform velocity in its forward stroke. The angular velocities ω_1, ω_5 and ω_3 of gears *1* and *5* and connecting rod *3* are related by the equation

$$\omega_5 = \frac{3\omega_3 - \omega_1}{2}.$$

The angular velocity ω_3 is determined on the basis of the given dimensions of slider-crank linkage *ABD*.

2446	LEVER-GEAR SCOTCH-YOKE MECHANISM WITH AN ADJUSTABLE SLIDER STROKE	LrG ML

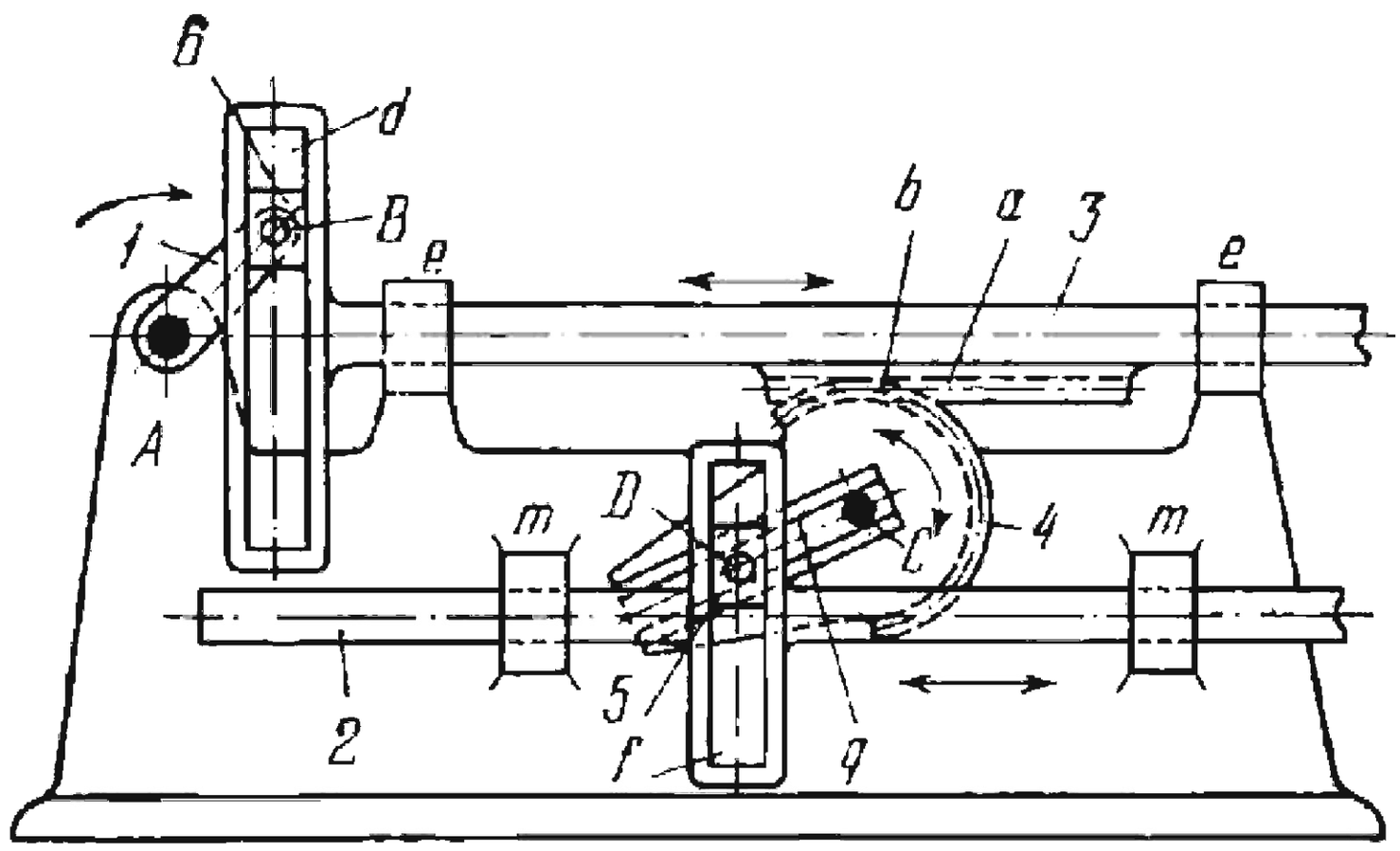

Crank *1* rotates about fixed axis *A* and is connected by turning pair *B* to slider *6* which moves along slot *d* of slider *3*. Slider *3* moves along fixed guides *e-e* and is rigidly attached to (or integral with) gear rack *a* which meshes with gear segment *b* of link *4*. Link *4* turns about fixed axis *C* and is connected by turning pair *D* to slider *5* which moves along slot *f* of slider *2*. Slider *2* moves along fixed guides *m-m*. When driving crank *1* rotates, slider *2* reciprocates. The stroke of slider *2* can be varied by changing the distance $\overline{CD}$. This is done by adjusting axis *D* of rotation of slider *5* along guide *q* of link *4* and clamping it in the required position.

2447	LEVER-GEAR COMPLEX SCOTCH-YOKE MECHANISM WITH AN ADJUSTABLE ROD STROKE	LrG ML

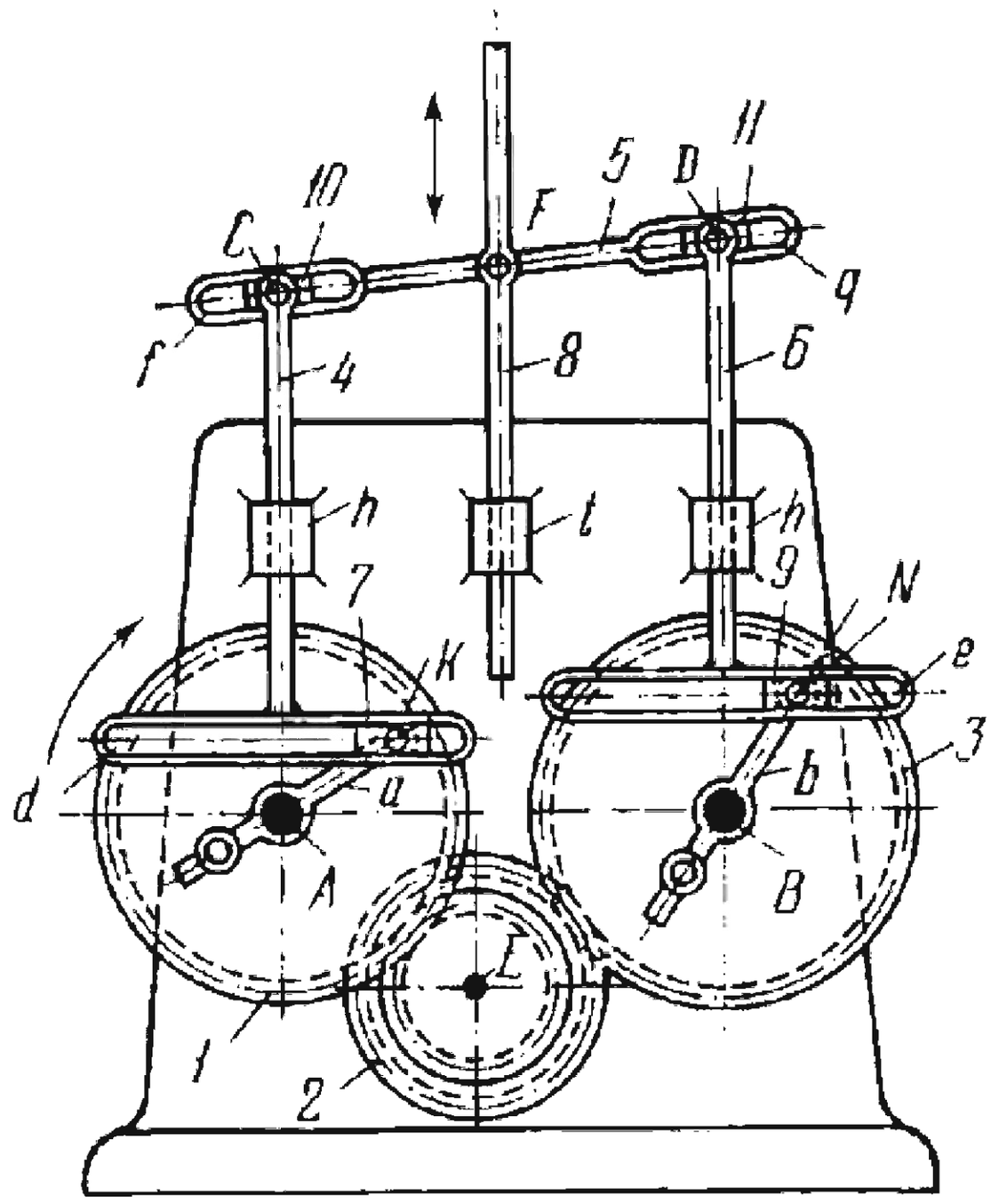

Gear *1* rotates about fixed axis *A* and meshes with one rim of cluster gear *2* which rotates about fixed axis *E*. The other rim of gear *2* meshes with gear *3* which rotates about fixed axis *B*. Rigidly attached to gears *1* and *3* are cranks *a* and *b* which are connected by turning pairs *K* and *N* to sliders *7* and *9*. Sliders *7* and *9* move along slots *d* and *e* of links *4* and *6* which slide in fixed guides *h-h*. Links *4* and *6* are connected by turning pairs *C* and *D* to sliders *10* and *11* which move along slots *f* and *q* of crossbeam *5*. Crossbeam *5* is connected by turning pair *F* to rod *8* which slides in fixed guide *t*. When gear *1* rotates, rod *8* reciprocates. The stroke and kind of motion of rod *8* can be varied by adjusting and clamping cranks *a* and *b* in various position on gears *1* and *3*.

2448	LEVER-GEAR MECHANISM WITH TWO CAM SLOTS	LrG ML

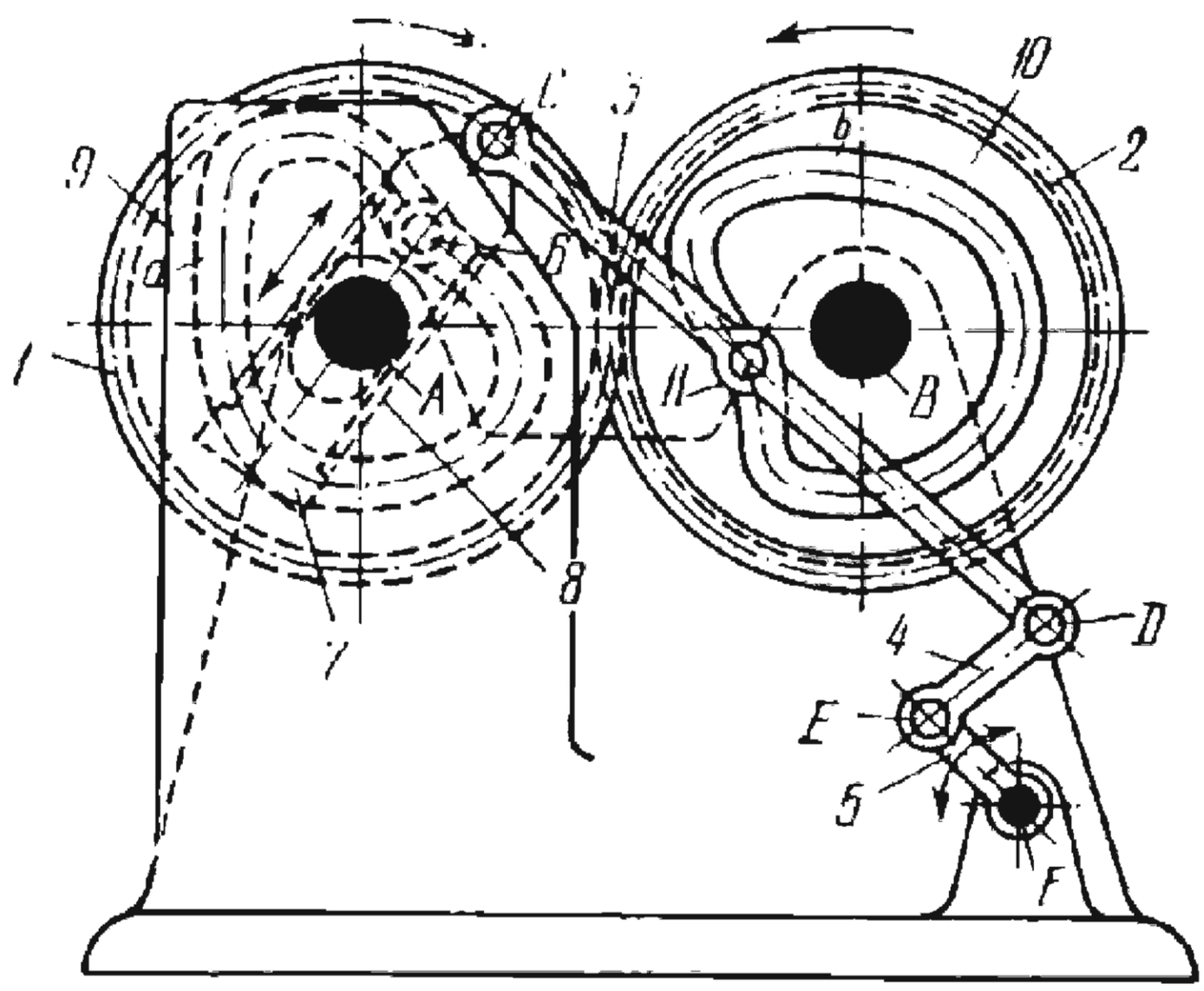

Gear *1* rotates about fixed axis *A* and meshes with gear *2* which rotates about fixed axis *B*. Gears *1* and *2* have equal pitch radii. Gear *1* is connected by a sliding pair to link *7* which slides along guide *8* of gear *1*. Roll *6* of link *7* slides along slot *a* of fixed face cam *9*. Link *3* is connected by turning pairs *C* and *D* to links *7* and *4*. Roll *11* of link *3* slides along slot *b* of face cam *10* which is rigidly attached to (or integral with) gear *2*. Link *4* is connected by turning pair *E* to lever *5* which turns about fixed axis *F*. When gear *1* rotates, lever *5* oscillates. The required kind of motion of lever *5* can be obtained by properly designing the shapes of slots *a* and *b* of cams *9* and *10*.

2449	LEVER-GEAR MECHANISM WITH A CAM SLOT	LrG ML

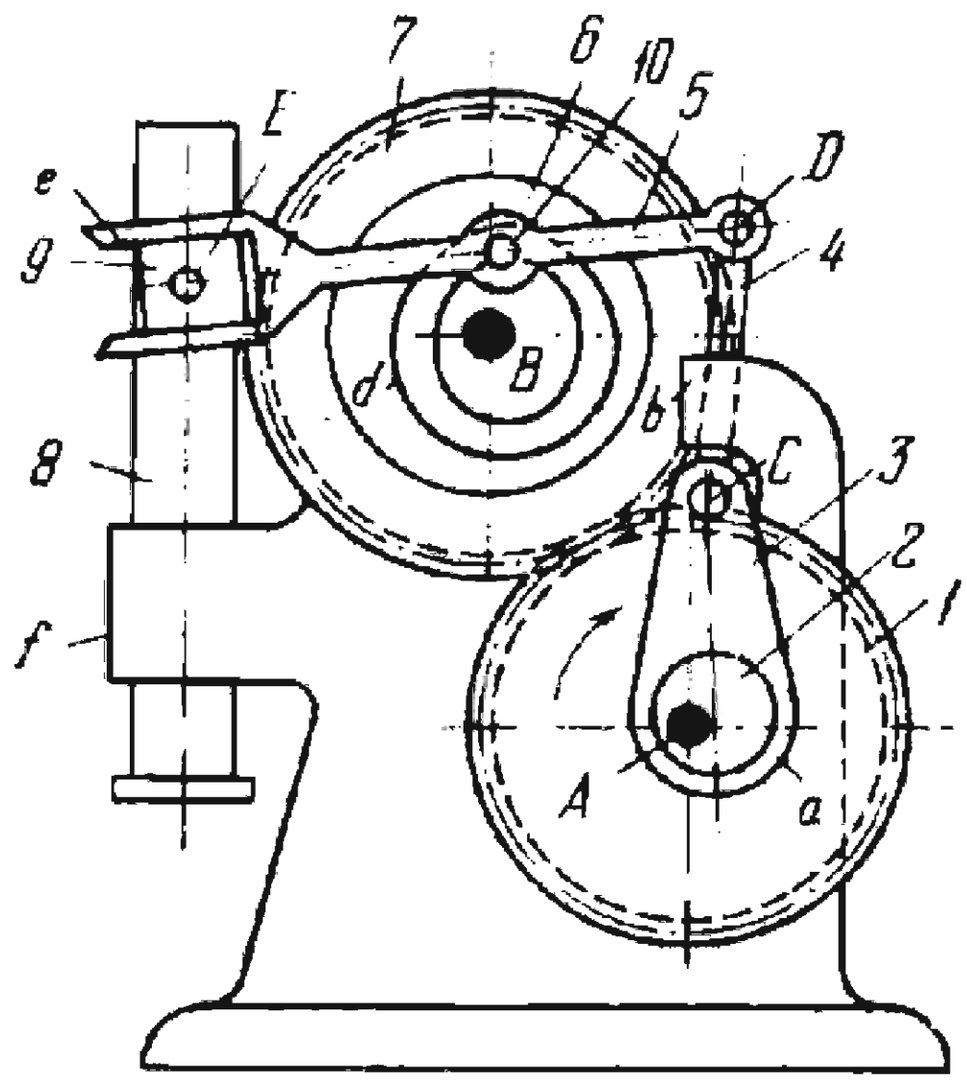

Gear *1* rotates about fixed axis *A* and meshes with gear *7* which rotates about fixed axis *B*. Eccentric *2* is rigidly attached to (or integral with) gear *1* and is connected by a turning pair in the form of collar *a* to link *3*. Link *3* is connected by turning pair *C* to slider *4* which moves in fixed guide *b*. Link *5* is connected by turning pair *D* to slider *4* and by a sliding pair to slider *9* which moves along slot *e* of link *5*. Roll *10* of link *5* slides along slot *d* of face cam *6* which is rigidly attached to (or integral with) gear *7*. Slider *9* is connected by turning pair *E* to bar *8* which moves in fixed guide *f*. When gear *1* rotates, bar *8* reciprocates. The required kind of motion of bar *8* can be obtained by properly designing the shape of slot *d* of cam *6*.

2450	LEVER-GEAR MECHANISM FOR CONVERTING OSCILLATING MOTION INTO VARIABLE REVERSING MOTION	LrG ML

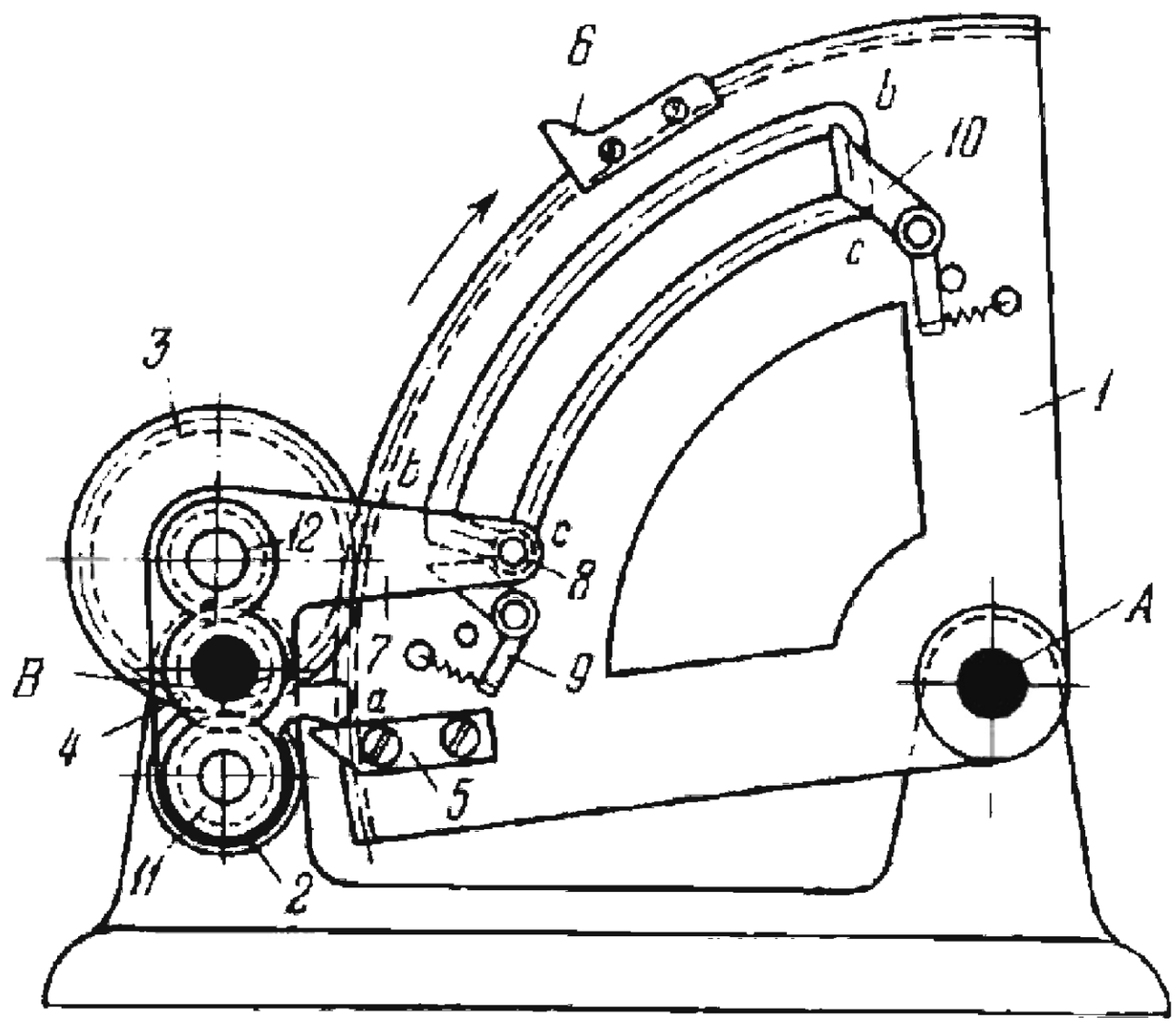

The mechanism converts oscillating motion of segment gear *1*, turning about fixed axis *A*, into reversing rotation of gear *4* at two speeds, one in each direction. The direction and speed of rotation of gear *4* change when segment gear *1* reverses. When segment gear *1* turns clockwise, roll *8* at the end of arm *7* moves along the inner concentric groove *c-c* of segment gear *1*. During this stroke, the rotation of gear *3*, meshing with segment gear *1*, is transmitted to driven gear *4* through gear *12* which is rigidly attached to gear *3*. Near the end of this stroke, dog *5* runs against lug *a* of arm *7*, which turns counterclockwise about fixed axis *B*, taking gear *3* out of engagement with segment gear *1* and bringing gear *2* into engagement with the segment gear. At this instant, segment gear *1* reverses its oscillation. When segment gear *1* turns counterclockwise, roll *8* at the end of arm *7* moves along the outer concentric groove *b-b* and latch *9* prevents the roll from dropping back to the inner groove. During this reverse stroke, the rotation of gear *2* is transmitted to driven gear *4* through gear *11* which is rigidly attached to gear *2*. Near the end of the reverse stroke, dog *6* runs against lug *a* of arm *7* which turns clockwise, taking gear *2* out of engagement with segment gear *1* and bringing gear *3* into engagement. At this instant, segment gear *1* reverses again and roll *8* passes to inner groove *c-c*, with latch *10* preventing it from returning to groove *b-b*. Because of the difference in the diameters and numbers of teeth of gears *2* and *3*, driven gear *4* rotates at two different speeds (one in each direction) which change when segment gear *1* reverses.

2451	LEVER-GEAR MECHANISM FOR DOUBLING THE SLIDE STROKE	LrG ML

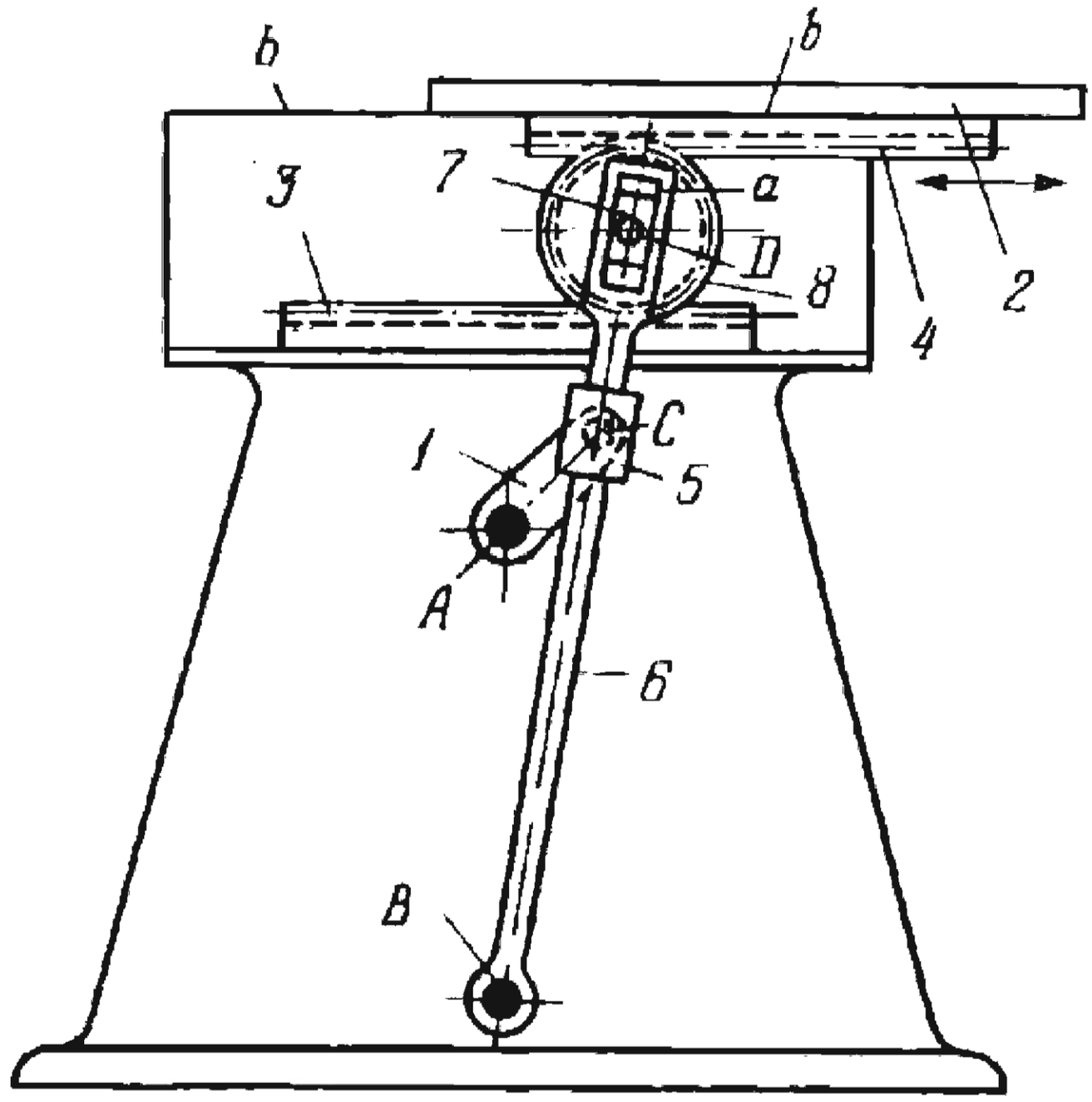

Crank *1* rotates about fixed axis *A* and is connected by turning pair *C* to slider *5* which moves along link *6*. Link *6* turns about fixed axis *B*. Slider *7* moves along slot *a* of link *6* and is connected by turning pair *D* to gear *8* which meshes with fixed rack *3* and with moving rack *4*. Rack *4* belongs to slide *2* which moves along fixed guides *b-b*. When crank *1* rotates, slide *2* reciprocates at a velocity twice that of point *D*. Thus the stroke of slide *2* is twice that of point *D*.

2452	LEVER-GEAR MECHANISM WITH A NONCIRCULAR GEAR AND A FLEXIBLE LINK	LrG ML

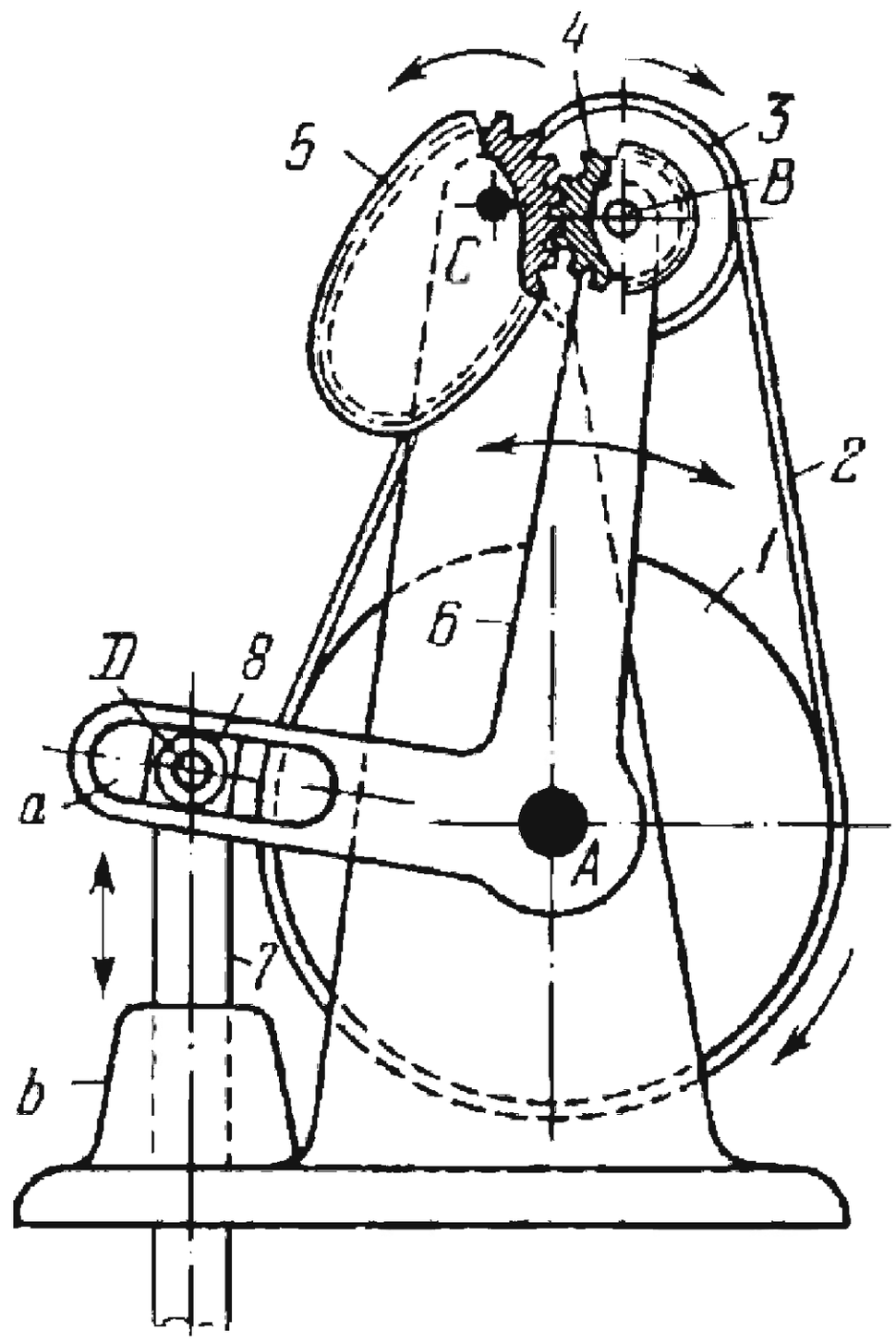

Round pulley *1* rotates about fixed axis *A*. Flexible link *2* runs over pulley *1* and pulley *3* which rotates about axis *B*. Circular gear *4* is rigidly attached to pulley *3* and meshes with noncircular gear *5* which rotates about fixed axis *C*. Bent lever *6* turns about axis *A* and is connected by turning pair *B* to links *3* and *4*, and by a sliding pair to slider *8*. Slider *8* moves along slot *a* of lever *6* and is connected by turning pair *D* to rod *7* which slides in fixed guide *b*. When pulley *1* rotates, lever *6* oscillates and rod *7* correspondingly reciprocates in guide *b*. The kind of motion of lever *6* and rod *7* depends on the shape of the centrode of noncircular gear *5*.

2453	LEVER-GEAR MECHANISM WITH CIRCULAR AND NONCIRCULAR GEARS	LrG ML

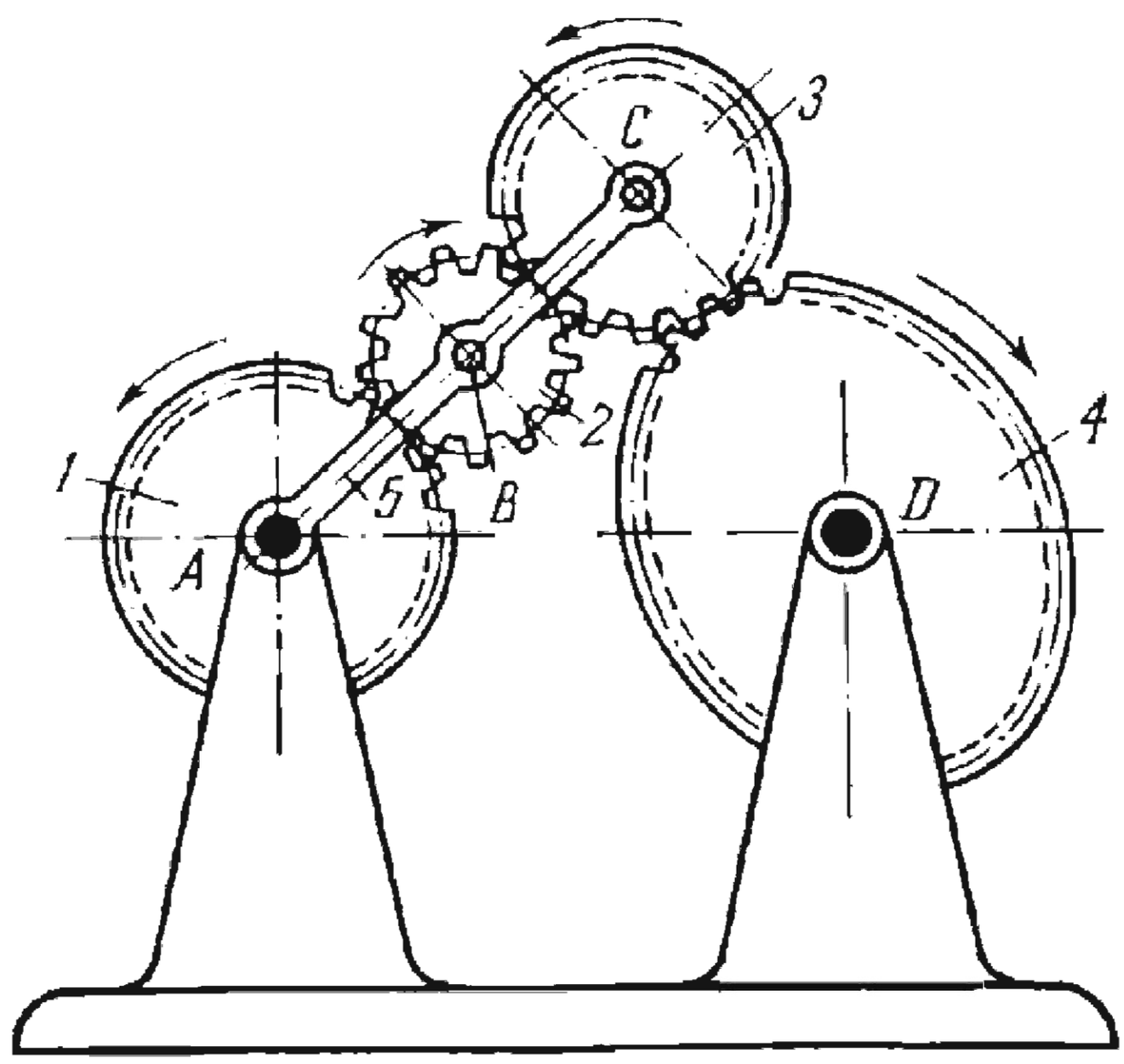

Circular gear *1* rotates about fixed axis *A* and meshes with circular idler gear *2* which rotates about axis *B* of link *5*. Gear *2* meshes with circular idler gear *3* which rotates about axis *C* of link *5*. Gear *3* meshes with noncircular gear *4* which rotates about fixed axis *D*. The pitch curve of gear *4* is a symmetrical oval. Link *5* turns about axis *A*. When driving gear *1* rotates at uniform velocity, driven gear *4* rotates at nonuniform velocity. Gears *3* and *4* are held in mesh by the weight of gears *2* and *3* and link *5*. The variation in the centre-to-centre distance $\overline{CD}$ is compensated for when link *5* turns about axis *A*.

2454	LEVER-GEAR MECHANISM WITH AN ECCENTRIC GEAR	LrG ML

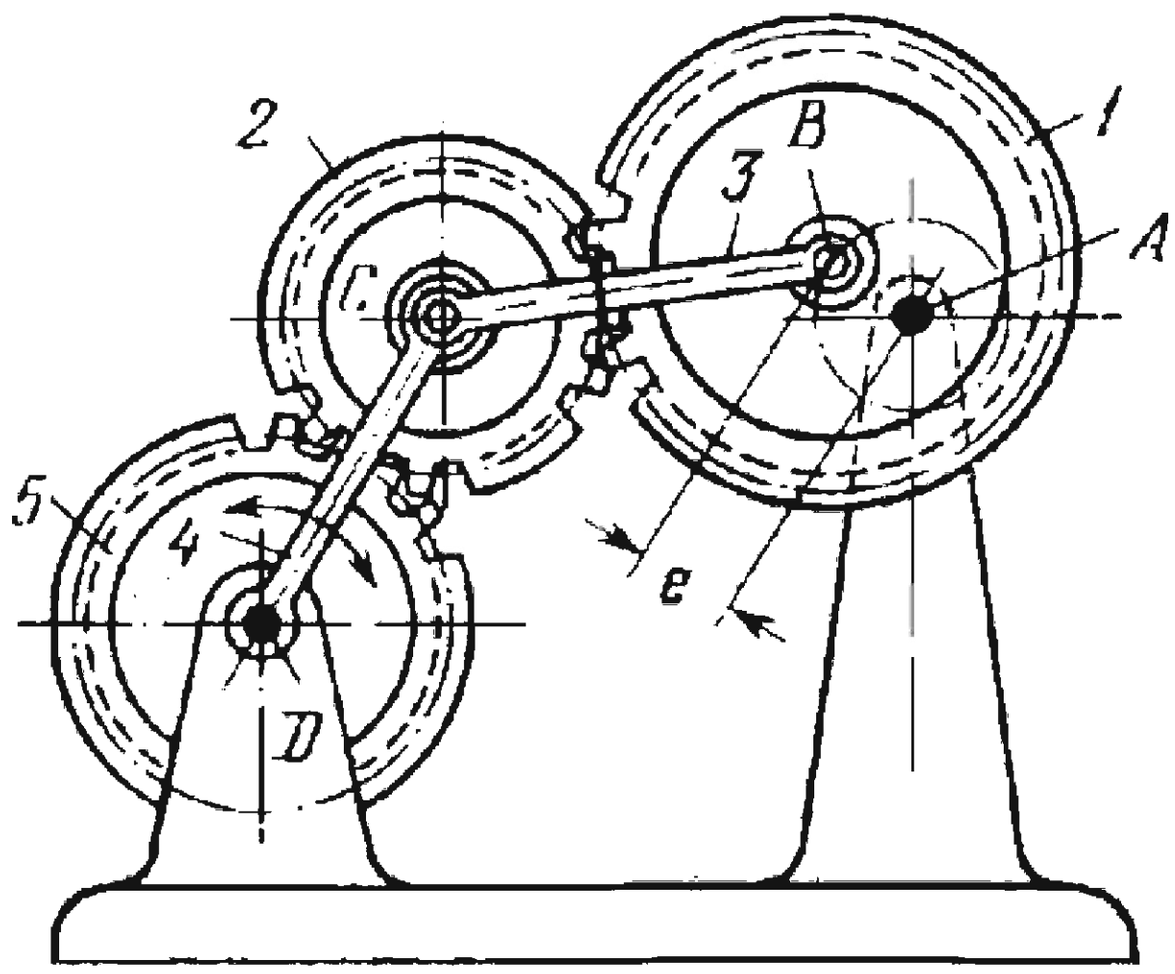

Circular gear *1* rotates about fixed axis *A* located at the distance *e* from geometric axis *B* of the gear. Gear *1* meshes with gear *2* which, in turn, meshes with gear *5* rotating about fixed axis *D*. Links *3* and *4* are connected by turning pairs *B*, *C* and *D* to gears *1*, *2* and *5* and to the base. When driving gear *1* rotates at uniform velocity, driven gear *5* rotates at nonuniform velocity. The kind of motion of gear *5* can be varied by reducing or increasing eccentricity *e*. The angular velocities ω_1, ω_2, ω_4 and ω_5 of gears *1* and *2*, link *4* and gear *5* are related by the equation

$$\omega_5 = \omega_1 \frac{i_{21}}{i_{25}} + \omega_2 \frac{1 - i_{21}}{i_{25}} - \omega_4 \frac{1 - i_{25}}{i_{25}}$$

where $i_{25} = \frac{\omega_2}{\omega_5} = -\frac{z_5}{z_2}$, $i_{21} = \frac{\omega_2}{\omega_1} = -\frac{z_1}{z_2}$, and z_1, z_2 and z_5 are the numbers of teeth of gears *1*, *2* and *5*. Angular velocities ω_4 and ω_5 are determined on the basis of the given dimensions of four-bar linkage *ABCD*.

2455	LEVER-GEAR PLANETARY CRANK-AND-ROCKER-ARM MECHANISM	LrG ML

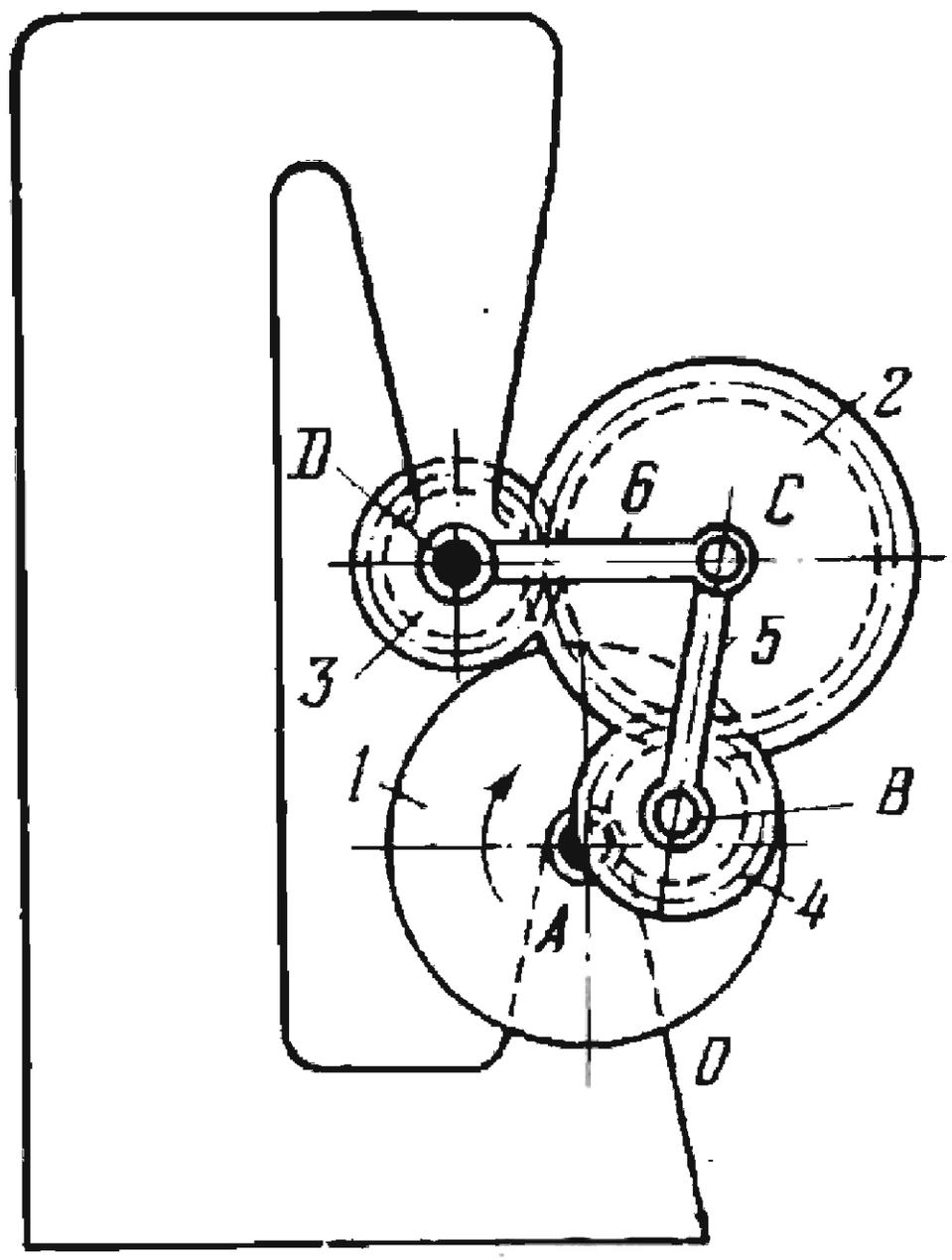

Designed as a disk, crank *1* rotates about fixed axis *A* and is connected by turning pairs *B* to connecting rod *5* and gear *4*. Connecting rod *5* is connected by turning pair *C* to rocker arm *6* which turns about fixed axis *D*. Gear *4* meshes with gear *2* which rotates about axis *C*. Gear *2* meshes with gear *3* which is rigidly attached to the base. When crank *1* rotates, gears *2* and *4* have complex motions. The transmission ratios from crank *1* to gears *2* and *4* equal

$$i_{12}=\frac{\omega_1}{\omega_2}=\frac{i_{16}}{1-i_{23}}=i_{16}\frac{z_2}{z_2+z_3}$$

and

$$i_{14}=\frac{\omega_1}{\omega_4}=\frac{i_{15}}{1-i_{42}}=i_{15}\frac{z_2}{z_2+z_4}$$

where ω_1, ω_2 and ω_4 are the angular velocities of crank *1* and gears *2* and *4*, and z_2, z_3 and z_4 are the numbers of teeth of gears *2*, *3* and *4*. The transmission ratios $i_{15}=\frac{\omega_1}{\omega_5}$ and $i_{16}=\frac{\omega_1}{\omega_6}$, where ω_1, ω_5 and ω_6 are the angular velocities of links *1*, *5* and *6*, are determined on the basis of the given dimensions of crank and rocker-arm linkage *ABCD*.

2456	LEVER-GEAR DIFFERENTIAL SLIDER-CRANK MECHANISM	LrG ML

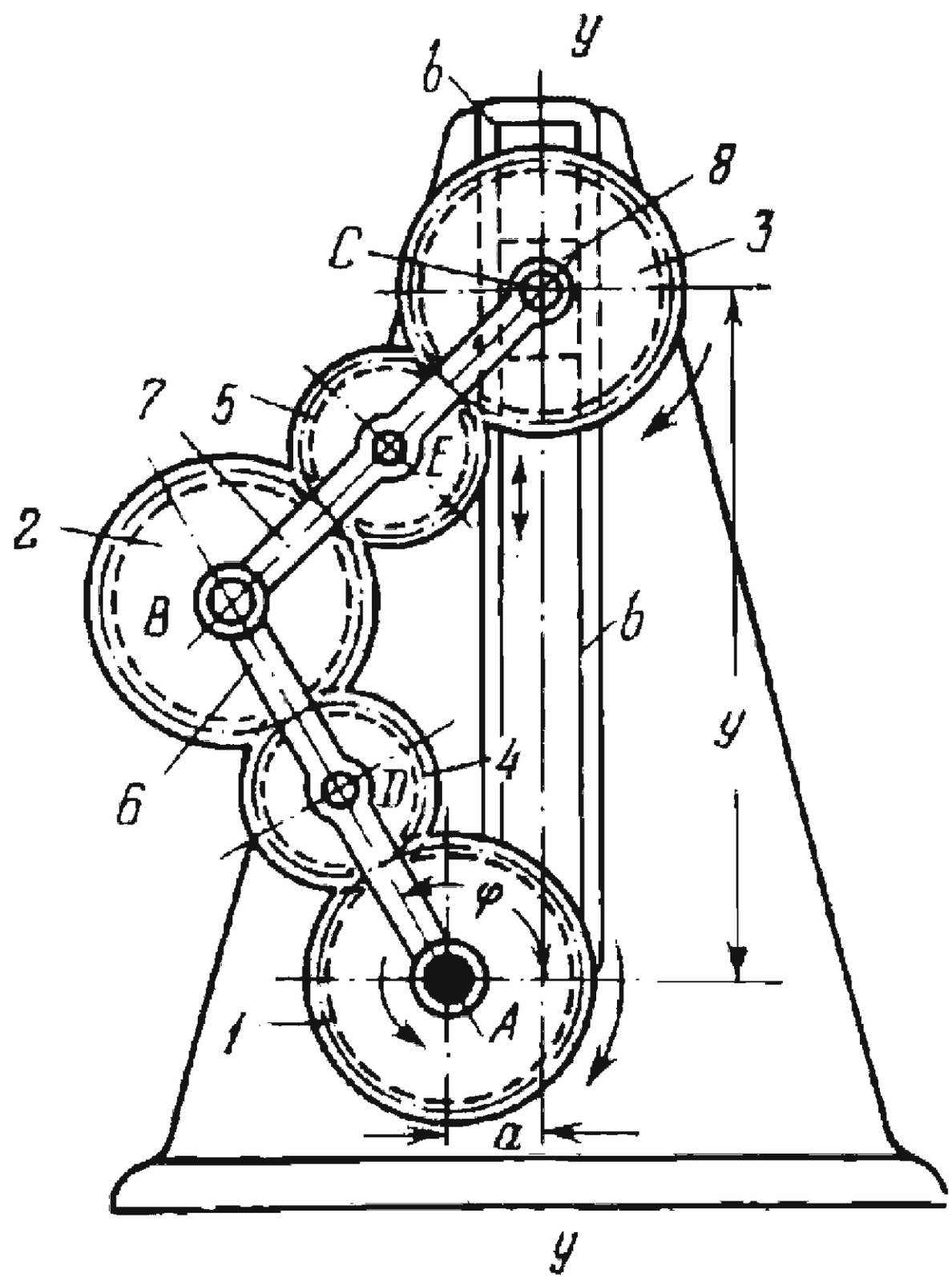

Gear *1* rotates about fixed axis *A*. Crank *6* rotates about axis *A* independently of gear *1*. Gear *1* meshes with gear *4* which rotates about axis *D* of crank *6* and meshes, in turn, with gear *2*. Gear *2* rotates about axis *B* and meshes with gear *5* which rotates about axis *E* of connecting rod *7* and meshes, in turn, with gear *3*. Connecting rod *7* is connected by turning pairs *B* and *C* to crank *6* and to gear *3* and slider *8*. Slider *8* moves along fixed guides *b-b*. Since gears *1*, *2* and *3* have the same dimensions, as do gears *4* and *5*, the length of crank *6* equals that of connecting rod *7*. When driving gear *1* rotates with angular velocity ω_1 and driving crank *6* rotates with angular velocity ω_6, independent of ω_1, driven gear *3* rotates about axis *C* with angular velocity ω_1 and reciprocates along axis *y-y*. The displacement of gear *3* is

$$y = l\,(\sin\varphi \pm \sqrt{1 - (\varkappa - \cos\varphi)^2})$$

where l is the length of links *6* and *7*, $\varkappa = \frac{a}{l}$, and φ is the angle of rotation of crank *6*. If $a = 0$, then the displacement

$$y = 2l \sin \varphi.$$

Different kinds of motion of driven gear *3* can be obtained by varying the magnitudes and directions of angular velocities ω_1 and ω_6.

2457	SLIDING-LEVER-GEAR PLANETARY MECHANISM	LrG ML

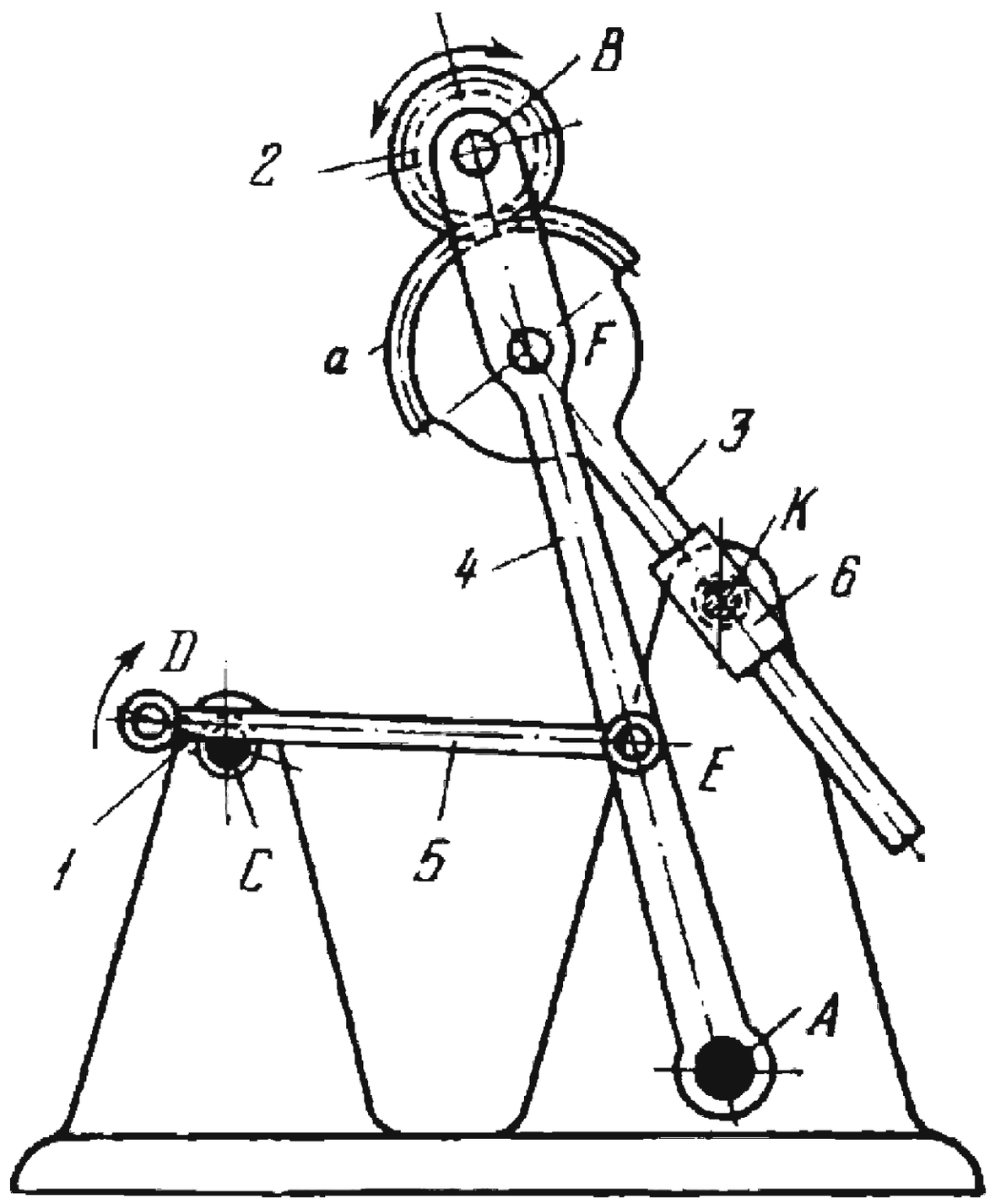

Crank *1* rotates about fixed axis *C* and is connected by turning pair *D* to link *5* which, in turn, is connected by turning pair *E* to rocker arm *4*. Rocker arm *4* turns about fixed axis *A* and is connected by turning pair *F* to sliding lever *3* which moves in slider *6*. Slider *6* turns about fixed axis *K*. Lever *3* has gear segment *a* which meshes with pinion *2*. Pinion *2* turns about axis *B* of rocker arm *4*. When crank *1* rotates at uniform velocity, gear *2* rotates at nonuniform velocity and its complex motion is determined by the dimensions of the links.

2458	LEVER-GEAR SCOTCH-YOKE PLANETARY MECHANISM	LrG ML

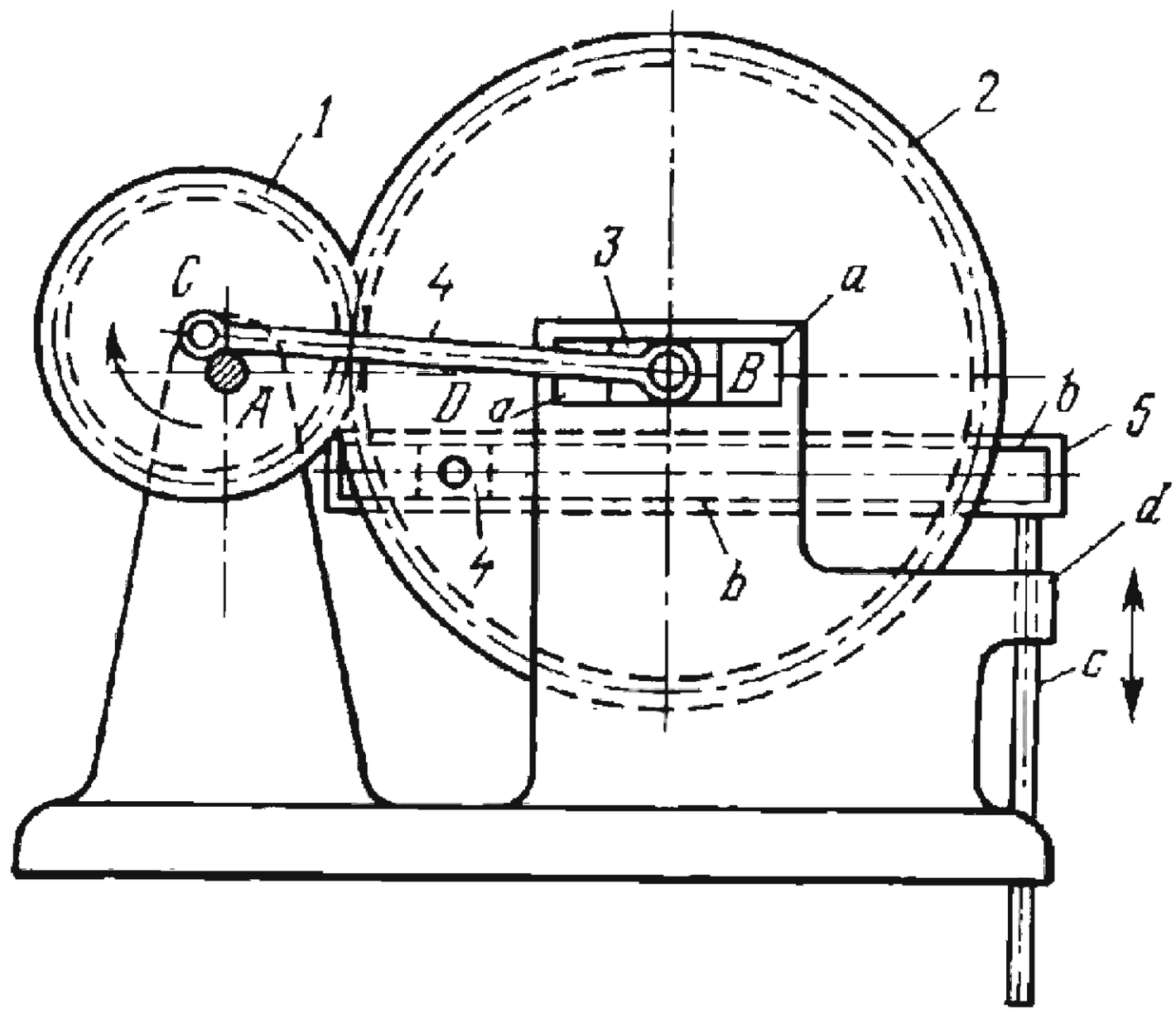

Circular gear *1* rotates about eccentrically located fixed axis *A* and meshes with gear *2* which rotates about axis *B* of slider *3*. Slider *3* moves along fixed guides *a-a*. Connecting rod *4* is connected to gear *1* by turning pair *C* (located at the geometric centre of gear *1*) and to slider *3* by turning pair *B*. Gear *2* is connected by turning pair *D* to slider *4* which moves along slot *b-b* of slotted link *5* whose rod *c* slides in fixed guide *d*. When gear *1* rotates, slotted link *5* reciprocates. The angular velocities ω_1, ω_2 and ω_4 of gears *1* and *2*, and connecting rod *4* are related by the condition

$$\omega_2 = \omega_1 \frac{1}{i_{12}} - \omega_4 \frac{1 - i_{12}}{i_{12}}$$

where $i_{12} = -\frac{z_2}{z_1}$, z_1 and z_2 are the numbers of teeth of gears *1* and *2*. Angular velocity ω_4 is determined on the basis of the given dimensions of slider-crank linkage *ACB*.

2459	LEVER-GEAR PLANETARY MECHANISM	LrG ML

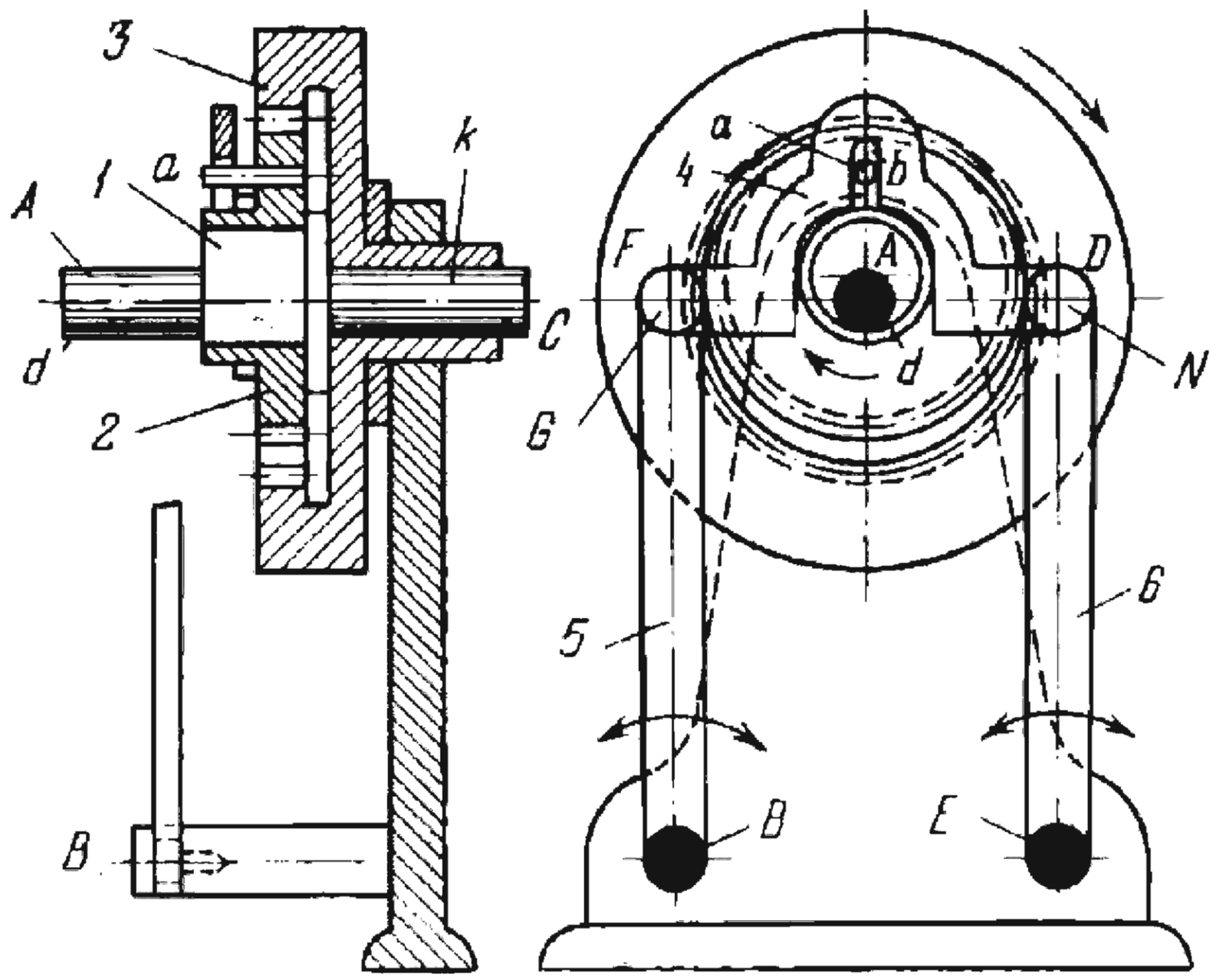

Round eccentric *1* rotates about fixed axis *A*. Ring gear *2* rotates about the geometric axis of eccentric *1* and meshes with internal gear *3* which rotates about fixed axis *C*. Pin *a* on gear *2* slides along slot *b* of link *4* which is connected by turning pairs *G* and *N* to links *5* and *6*. Links *5* and *6* turn about fixed axes *B* and *E*. Link *4* slides along the hub of gear *2*. When driving shaft *d* rotates at uniform velocity, gear *2* has circular translational motion and gear *3* rotates on shaft *k* about axis *C* at constant angular velocity. The lengths of the links comply with the conditions: $\overline{BG} = \overline{EN}$ and $\overline{GN} = \overline{BE}$, i.e. figure *BGNE* is a parallelogram. The transmission ratio from shaft *d* to shaft *k* is

$$i_{dk} = \frac{z_3 - z_2}{z_3}$$

where z_2 and z_3 are the numbers of teeth of gears *2* and *3*. Large transmission ratios can be obtained if there is a small difference between the numbers of teeth of the gears.

2460	LEVER-GEAR PLANETARY MECHANISM WITH NONUNIFORM VELOCITY OF THE DRIVEN SHAFT	LrG ML

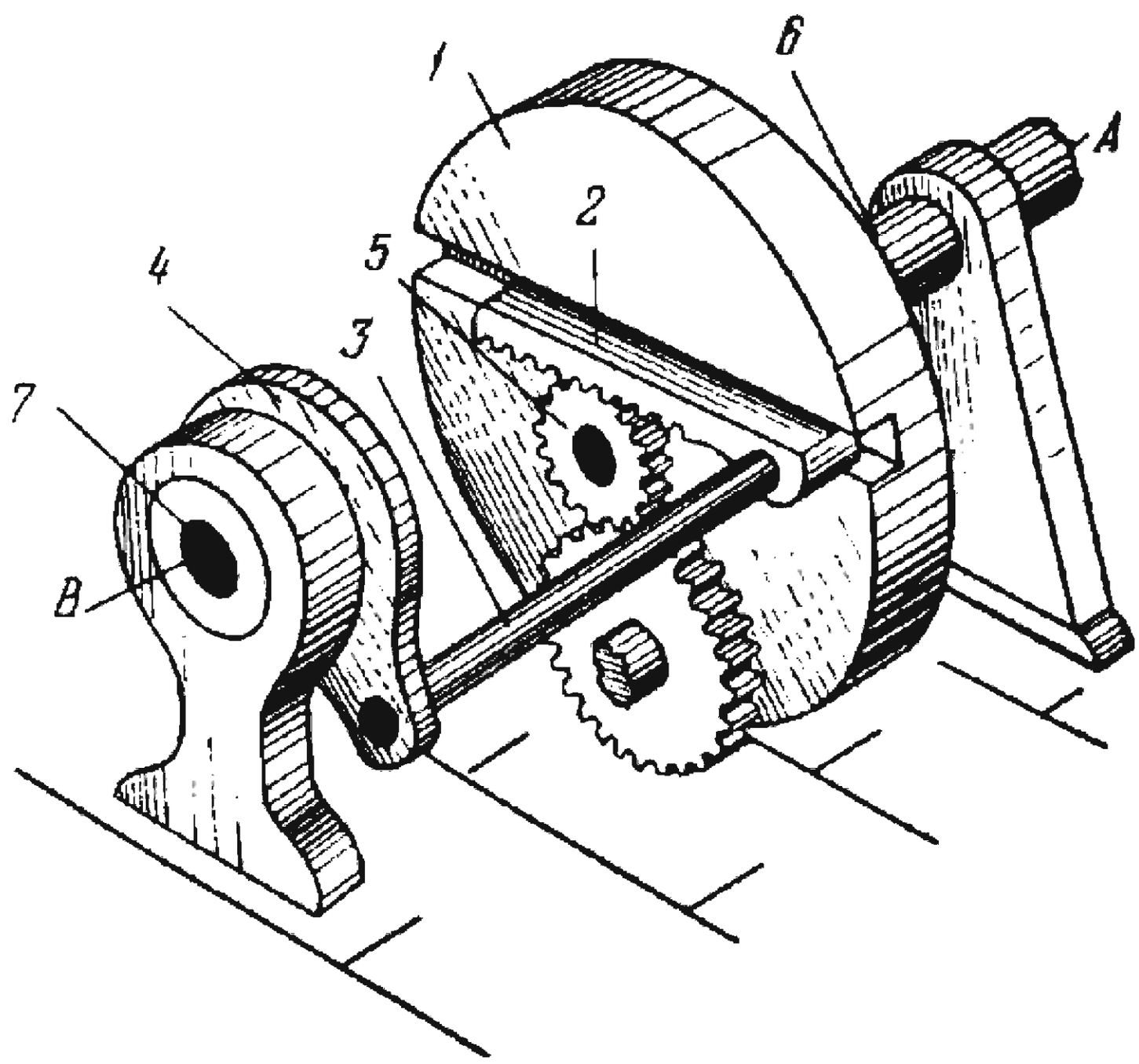

Shaft *6* rotates about fixed axis *A*, imparting rotation to disk *1* together with rack *2*. Rack *2* is connected by rod *3* to link *4* which is mounted on shaft *7* and rotates about fixed axis *B*. Axes *A* and *B* are parallel to each other. When shaft *6* rotates, rack *2* has a supplementary reciprocating motion in the slot of disk *1*. As a result, gear *5* and shaft *7* rotate with nonuniform velocities depending upon the relations of the dimensions of the links.

2461	LEVER-GEAR PLANETARY MECHANISM WITH NONUNIFORM VELOCITY OF THE DRIVEN LINK	LrG ML

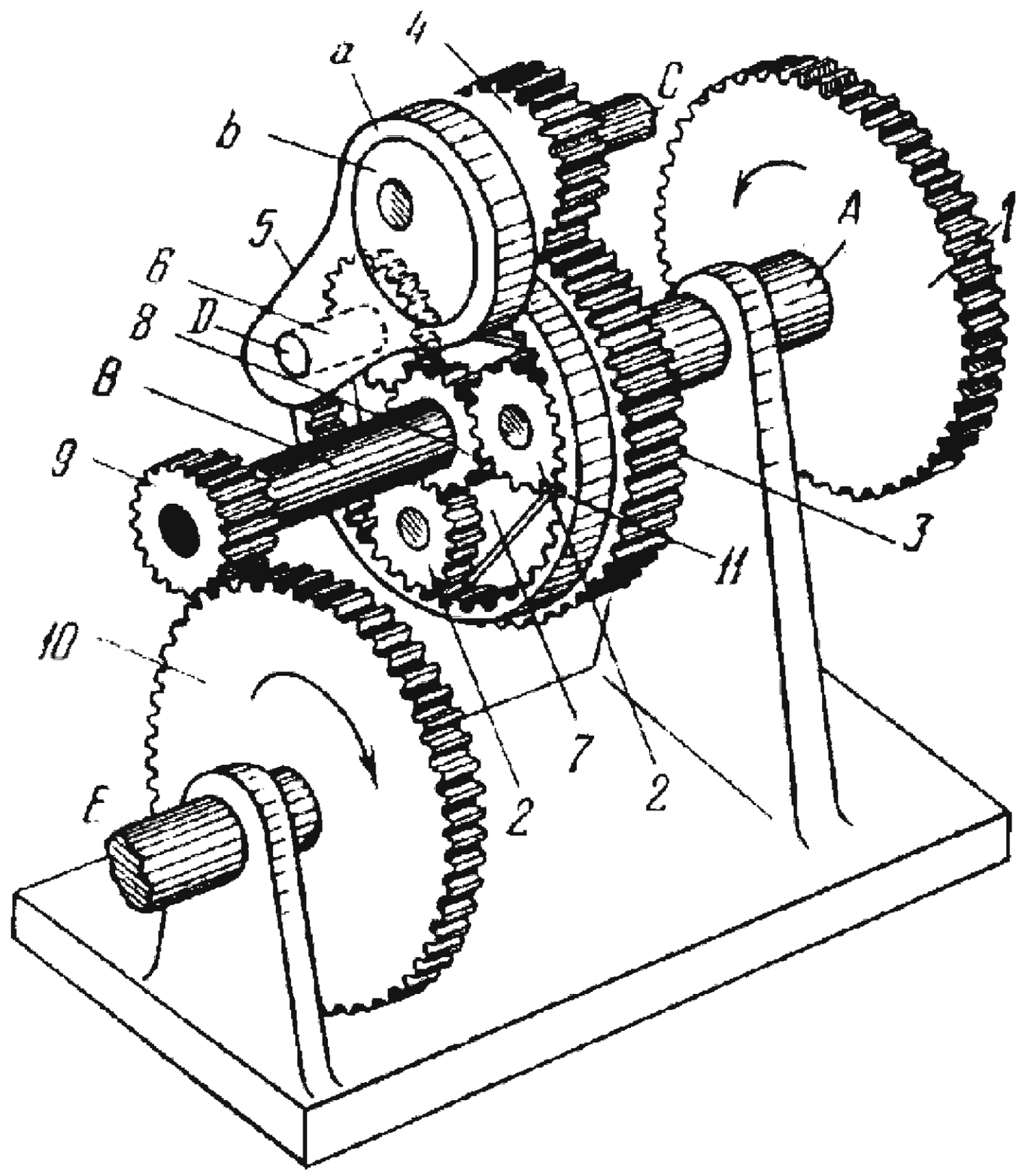

Shafts *A* and *B* are driven independently by trains of gears that mesh with gears *1* and *10*. Gear *3* is keyed on shaft *A* and meshes with gear *4* which rotates about fixed axis *C*. Round eccentric *b* is rigidly attached to gear *4* and is encircled by collar *a* of link *5* which is connected by turning pair *D* to carrier *7*. Gear *8* is keyed on shaft *B* and meshes with planet gears *2*. Gears *2* are connected by turning pairs to carrier *7* and mesh with internal gear *11*. Gear *9* is keyed on shaft *B* and meshes with gear *10*. When gears *1* and *10* rotate at uniform velocities, carrier *7* has nonuniform rotation.

2462	LEVER-GEAR PLANETARY MECHANISM WITH COMPLEX MOTION OF THE DRIVEN LINK	LrG ML

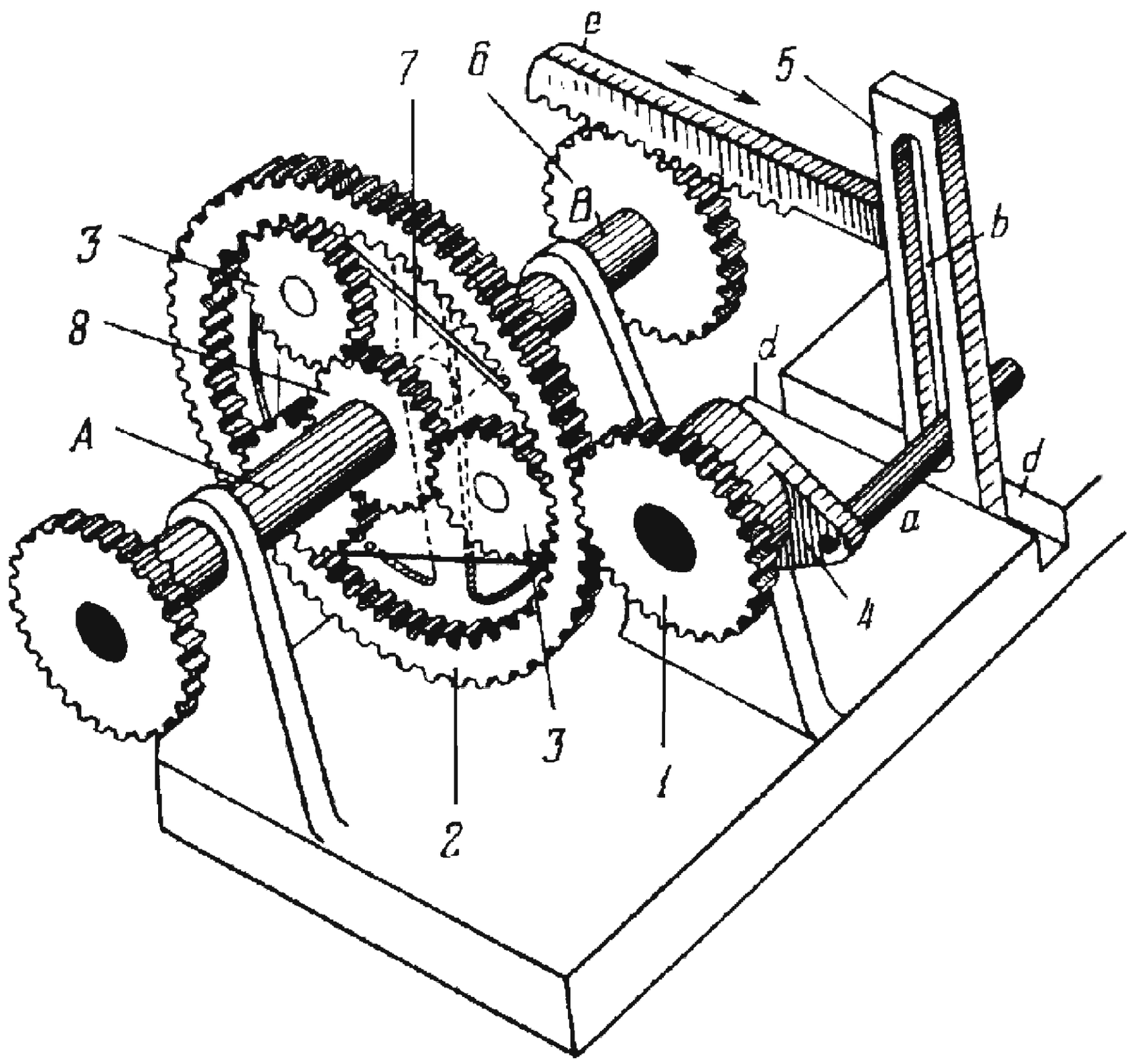

Rigidly attached to driving gear *1* is lever *4* which has pin *a* sliding along slot *b* of link *5*. Link *5* slides along fixed guides *d-d* and has gear rack *e* which meshes with gear *6*. Gear *6* and carrier *7* are keyed on shaft *B*. Planet gears *3* are connected by turning pairs to carrier *7*, and mesh with the internal teeth of gear *2* and with gear *8* keyed on shaft *A*. The external teeth of gear *2* mesh with gear *1*. When gear *1* rotates at uniform velocity, shaft *A* has nonuniform complex rotation depending upon the relations of the dimensions of the links.

2463	LEVER-GEAR PLANETARY REVERSING MECHANISM	LrG ML

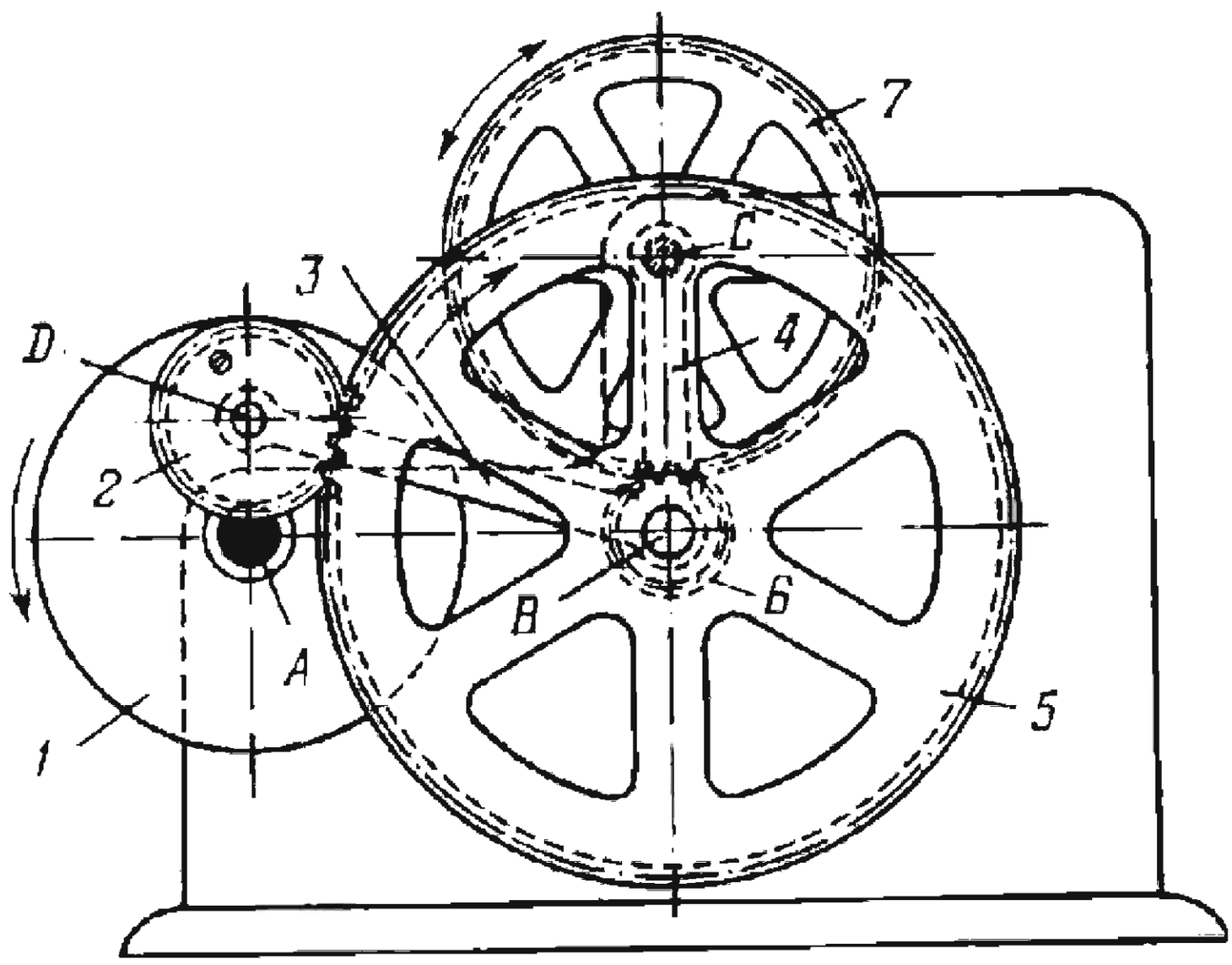

Disk *1* is keyed on driving shaft *A* and rotates with it. Gear *2* is rigidly attached eccentrically on disk *1*, at the distance $\overline{AD}$ from axis *A*, and meshes with gear *5*. Gears *5* and *6* are rigidly attached together and are connected by turning pair *B* to rocker arm *4* which turns about fixed axis *C*. Gears *2* and *5* are held in engagement by connecting rod *3*. Gear *6* meshes with gear *7* which rotates about axis *C*. When driving shaft *A* rotates, rocker arm *4* with axis *B* oscillates about axis *C*. In each revolution of disk *1*, gear *7* turns first in one direction and then in the other. It turns faster and more in one direction than in the other. The periods of forward and reverse rotation depend on the dimensions of the links of four-bar linkage *ADBC* and on the relations of the numbers of teeth of gears *2*, *5*, *6* and *7*.

2464	LEVER-GEAR PLANETARY SCOTCH-YOKE MECHANISM WITH DRIVEN LINK STROKE ADJUSTMENT	LrG ML

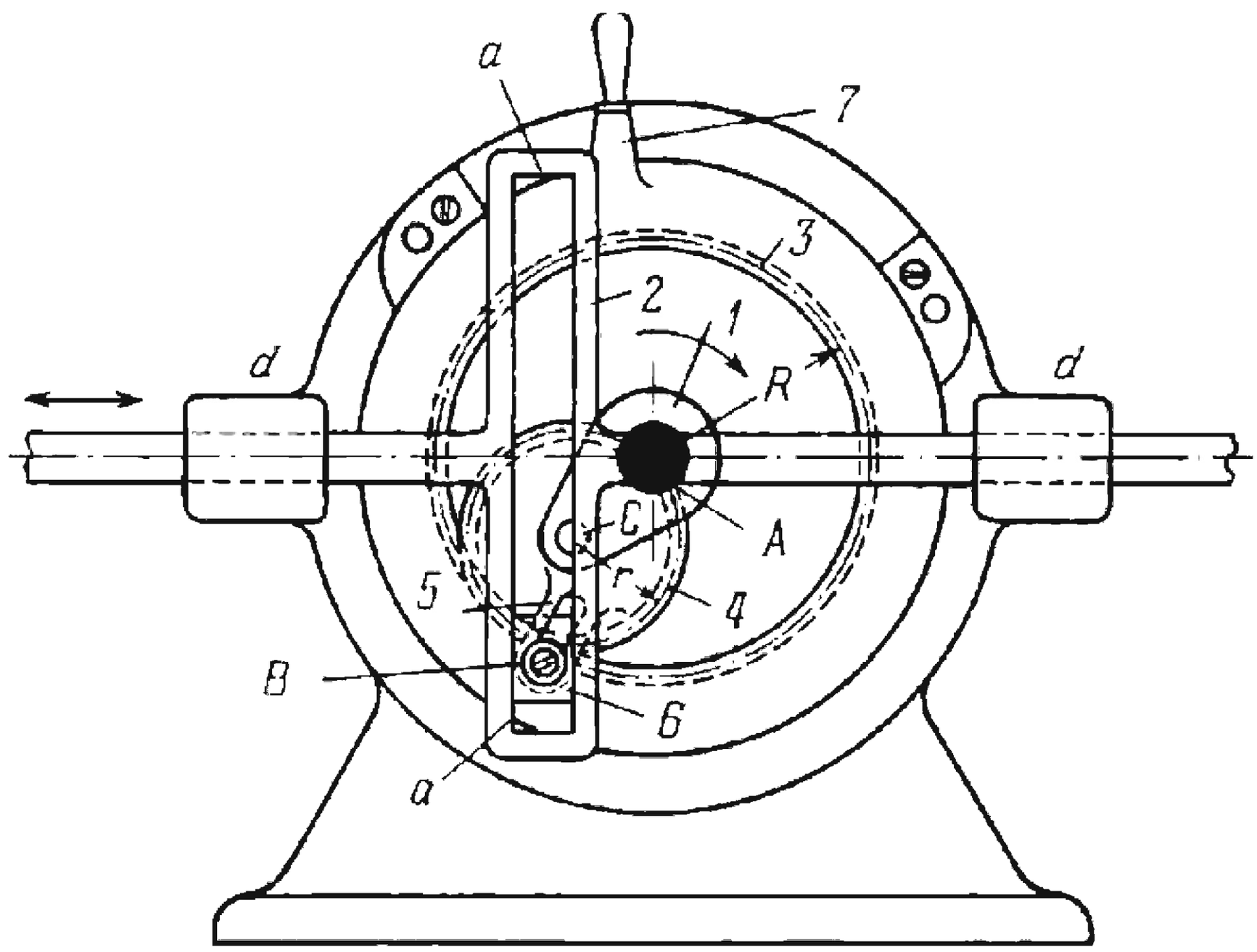

Carrier *1* rotates about fixed axis *A* and is connected by turning pair *C* to planet gear *4* which meshes with fixed internal gear *3*. Crank *5* is rigidly attached to (or integral with) planet gear *4* and is connected by turning pair *B* to slider *6* which moves along slot *a-a* of link *2*. Point *B* is located on the pitch circle of gear *4*. Link *2* slides in fixed guides *d-d* whose axis is perpendicular to the axis of slot *a-a*. The pitch radius of gear *3* equals $R = 2r$, where r is the pitch radius of planet gear *4*. When carrier *1* rotates, any point lying on the pitch circle of planet gear *4* moves along a straight line passing through point *A*. By turning gear *3* with handle *7* and clamping it in the required position, point *B* of crank *5* can be adjusted to various positions with respect to axis *AC* of the carrier. This enables various strokes of the driven link *2* to be obtained in the range from zero to $2R$.

2465	LEVER-GEAR PLANETARY MECHANISM WITH PERIODICALLY VARIABLE VELOCITY OF THE DRIVEN LINK	LrG ML

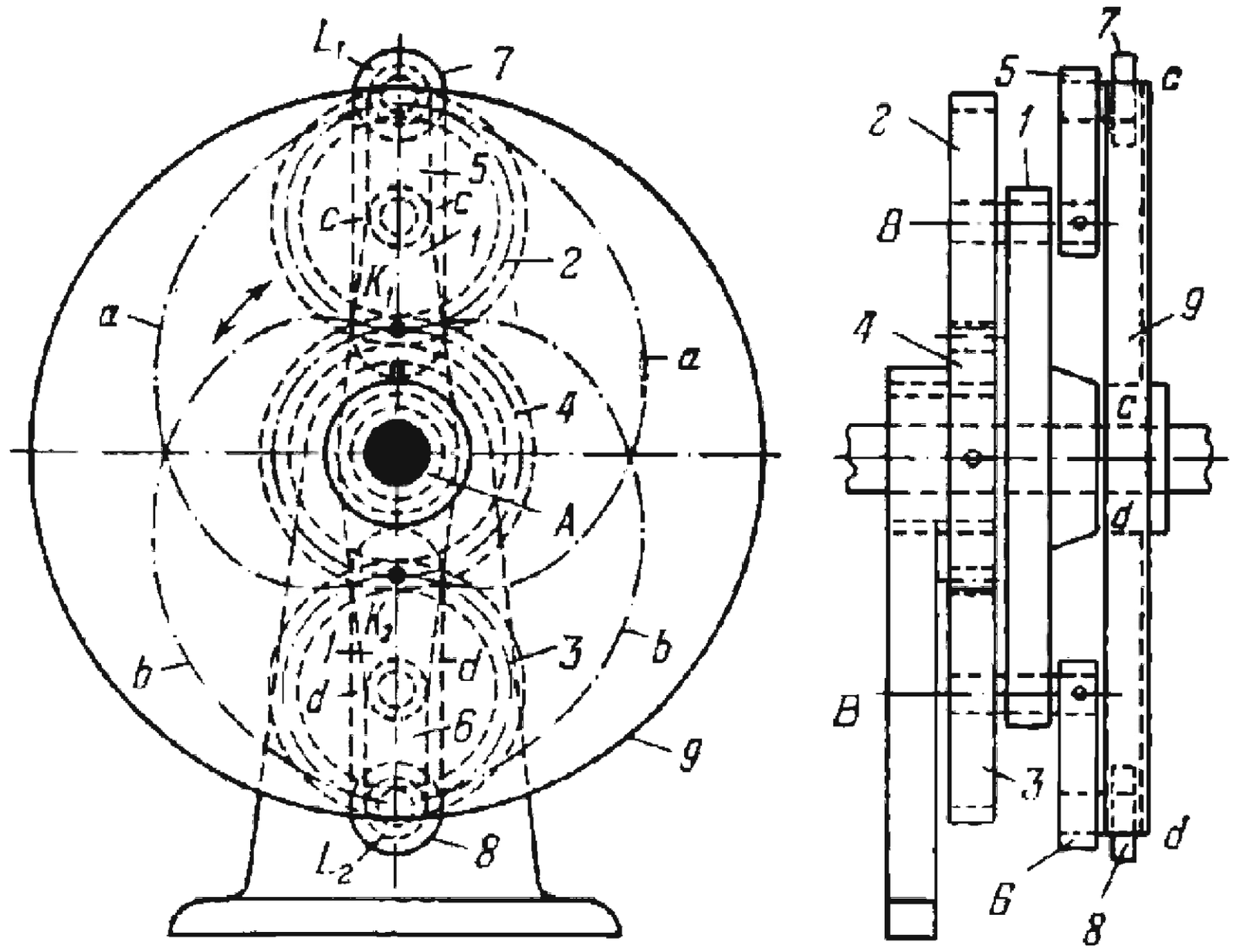

The driving link is carrier *1* which rotates about fixed axis *A* and is connected by turning pairs *B* to planet gears *2* and *3*. Gears *2* and *3* mesh with and roll around fixed sun gear *4*. Levers *5* and *6*, rigidly attached to the shafts of gears *2* and *3*, carry rollers *7* and *8* whose centres describe epicycloids *a-a* and *b-b*. Sliding along slots *c-c* and *d-d* of disk *9*, rollers *7* and *8* rotate it at a velocity that varies periodically from zero (when the centres of the rollers are at points K_1 and K_2 of their paths) to a certain maximum (when the centres of the rollers are at points L_1 and L_2 of their paths) and back again to zero. Since gears *2*, *3* and *4* have the same pitch diameter, the period of velocity variation of driven disk *9* is equal to the time required for one revolution of driving link *1* about axis *A*.

2466	LEVER-GEAR DOUBLE-ECCENTRIC MECHANISM FOR TRACING CONNECTING-ROD CURVES	LrG Ge

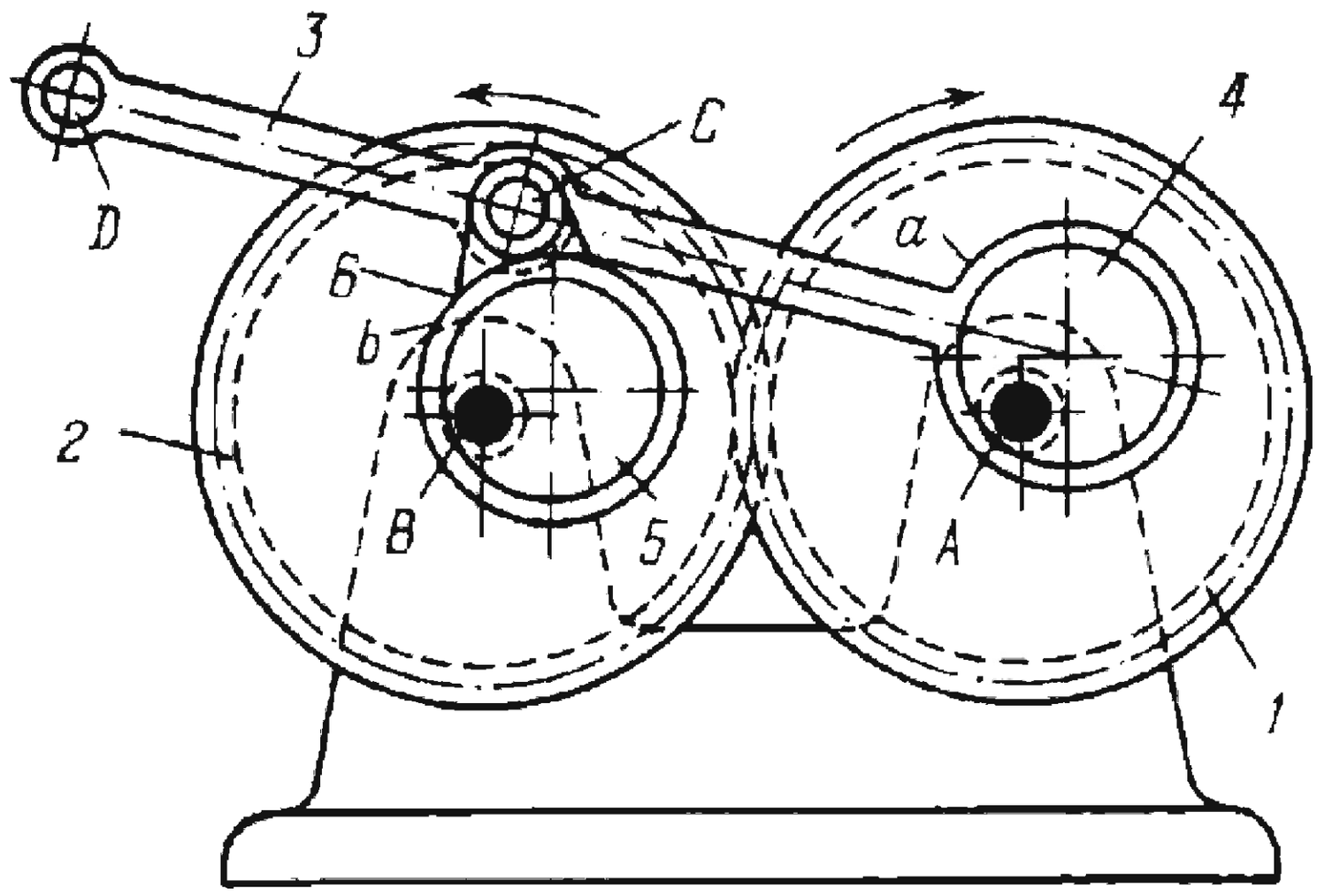

Gear *1* rotates about fixed axis *A* and meshes with gear *2* which rotates about fixed axis *B*. Round eccentrics *4* and *5* are each rigidly attached to (or integral with) gears *1* and *2*. Eccentric *4* is connected by a turning pair, designed as collar *a* encircling the eccentric, to link *3*. Link *3* is connected by turning pair *C* to link *6* which, in turn, is connected by a turning pair, designed as collar *b* encircling eccentric *5*, to this eccentric. Gears *1* and *2* have the same pitch diameter, and eccentrics *4* and *5* are of the same diameter. When driving gear *1* rotates, link *3* has a complex motion and point *D* of this link describes a complex connecting-rod curve.

2467	LEVER-GEAR MECHANISM WITH A CURVILINEAR SLOTTED LINK FOR TRACING CONNECTING-ROD CURVES	LrG Ge

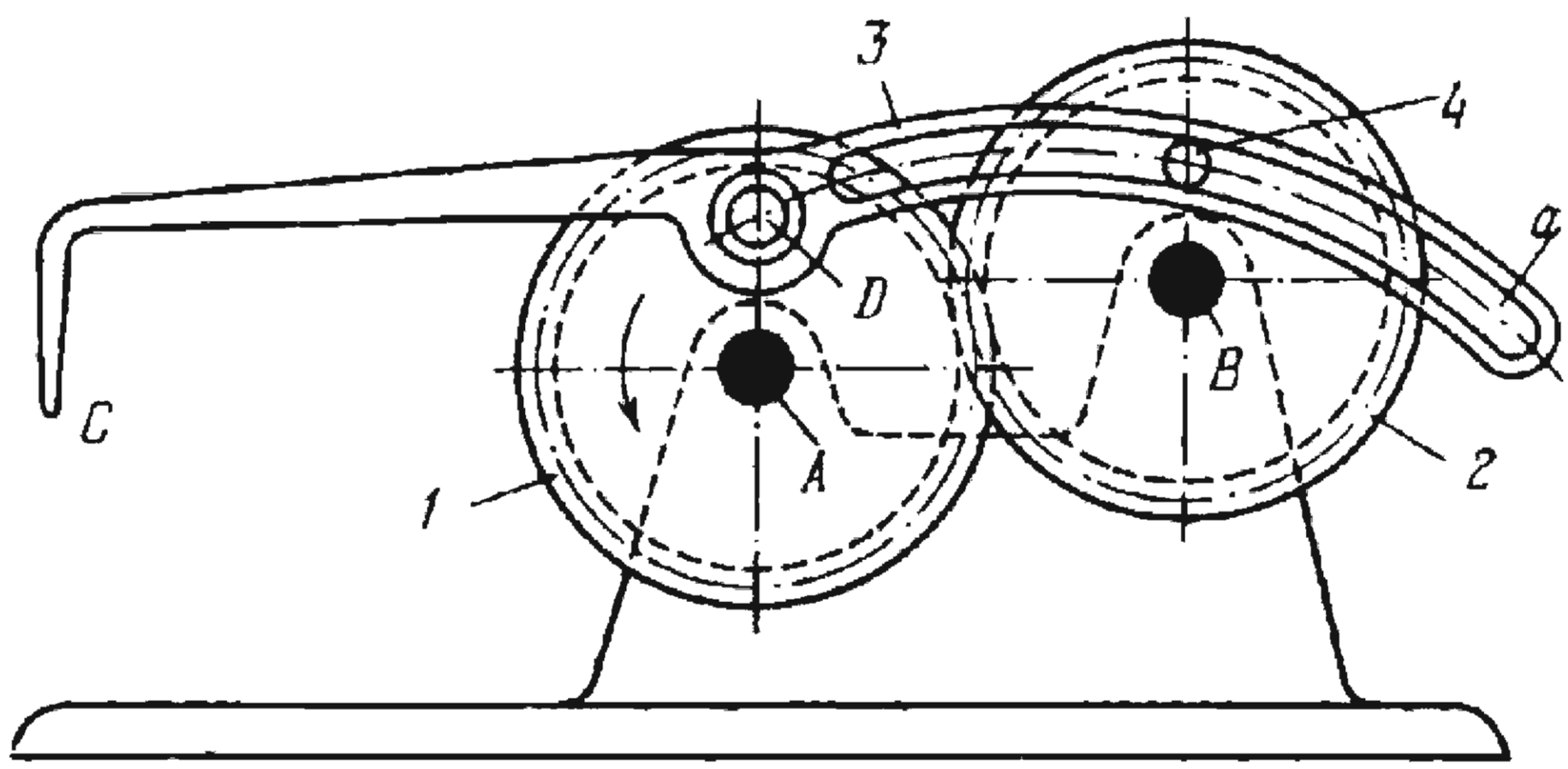

Gear *1* rotates about fixed axis *A* and meshes with gear *2* which rotates about fixed axis *B*. Gear *2* has pin *4* which slides along curvilinear slot *a* of link *3*. Link *3* is connected by turning pair *D* to gear *1*. When gear *1* rotates, point *C* of link *3* describes a complex connecting-rod curve.

2468	LEVER-GEAR MECHANISM FOR TRACING SINUSOID-TYPE CURVES	LrG Ge

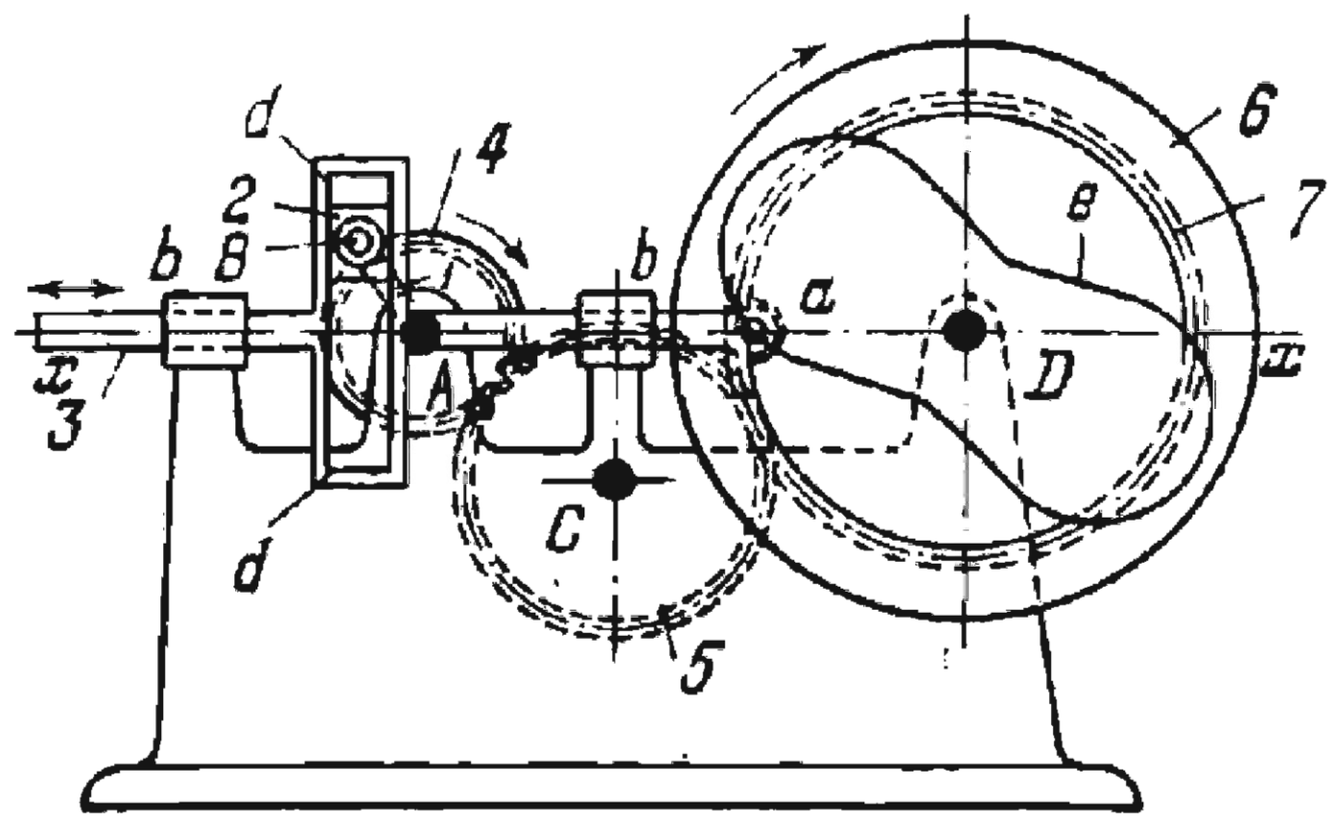

The mechanism is intended for tracing curves of the sinusoid type. Crank *1* and rigidly attached gear *4* rotate about fixed axis *A*. Crank *1* is connected by turning pair *B* to slider *2* which moves along slot *d-d* of link *3*. Link *3* slides in fixed guides *b-b*. Gear *4* meshes with gear *5* which rotates about fixed axis *C* and meshes with gear *7*. Gear *7* rotates about fixed axis *D* and is rigidly attached to disk *6*. When crank *1* rotates, point *a* of link *3* describes curve *e*, of the sinusoid type, on disk *6*. The displacement of point *a* along axis *x-x* equals $x = x_0 + r \cos \varphi$, and the angle of rotation of disk *6* is $\varphi_7 = \frac{z_4}{z_7}\varphi$, where x_0 is the initial coordinate determining the position of link *3*, r is the distance $\overline{AB}$, φ is the angle made by AB with axis *x-x*, and z_4 and z_7 are the numbers of teeth of gears *4* and *7*. Sinusoid-type curves of different shapes can be obtained by changing the length $\overline{AB}$ of crank *1* and the numbers of teeth, z_4 and z_7.

2469	LEVER-GEAR MECHANISM FOR TRACING CURVES FROM THEIR PROJECTIONS	LrG Ge

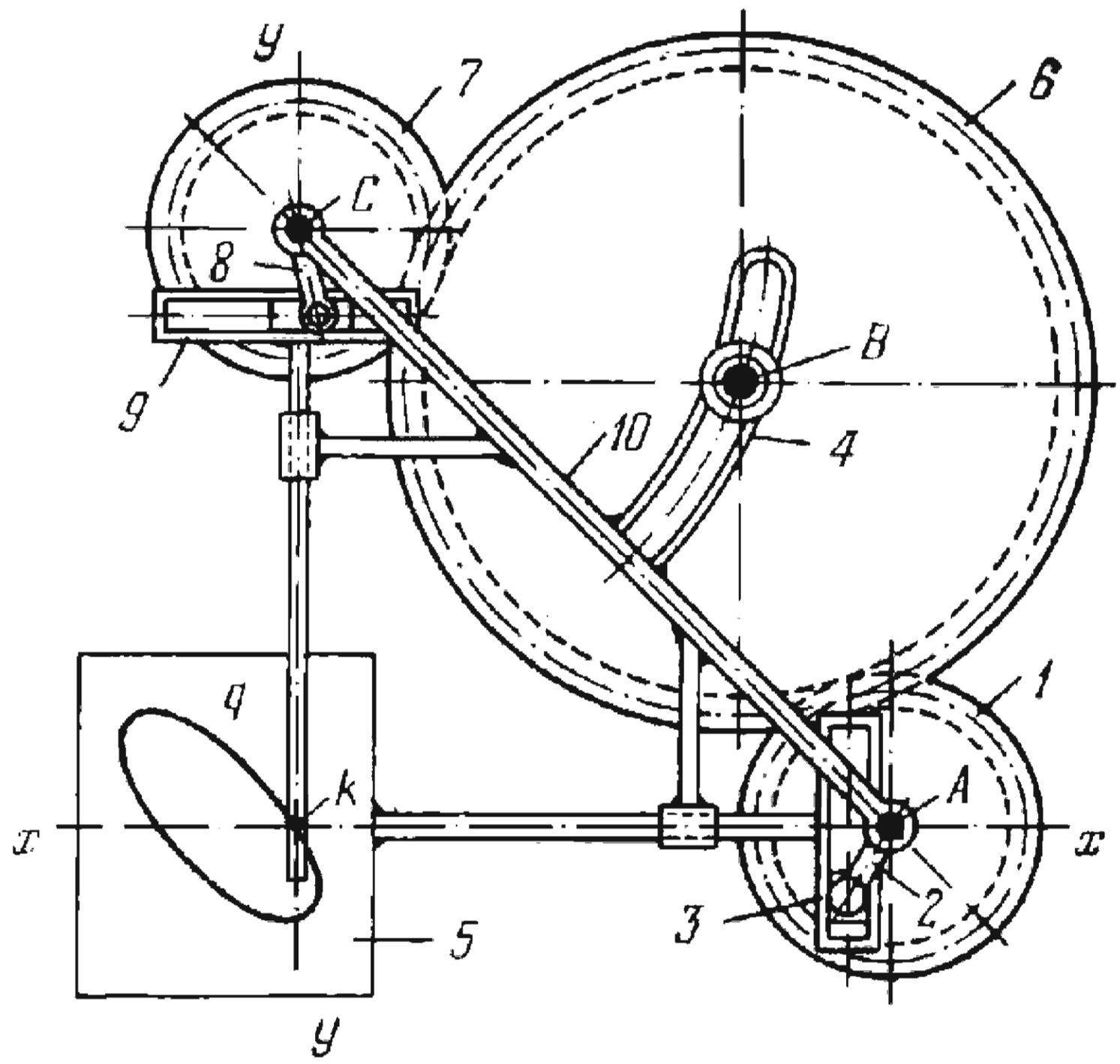

Gear *1* rotates about fixed axis *A* and meshes with gear *6* which rotates about fixed axis *B*. Gear *6* meshes with gear *7* which rotates about fixed axis *C*. Crank *2* is rigidly attached to gear *1* and imparts reciprocating motion along axis *x-x* to slotted link *3* and to plane table *5*, attached to link *3*. Crank *8* is rigidly attached to gear *7* and imparts reciprocating motion along axis *y-y* to slotted link *9* and to pencil *k* mounted on link *9*. Frame *10* is fixed by clamping. As a result of the addition of the motions of the plane table and pencil, curve *q* is described in the coordinate system with the axes *x-x* and *y-y*. The shape of the curve traced by pencil *k* is changed by changing the transmission ratio of change gears *1* and *7*. When the gears are changed, the stud of intermediate gear *6* is adjusted and clamped in the required position along slotted element *4* of frame *10*.

2470	LEVER-GEAR MECHANISM FOR TRACING SINE CURVES	LrG Ge

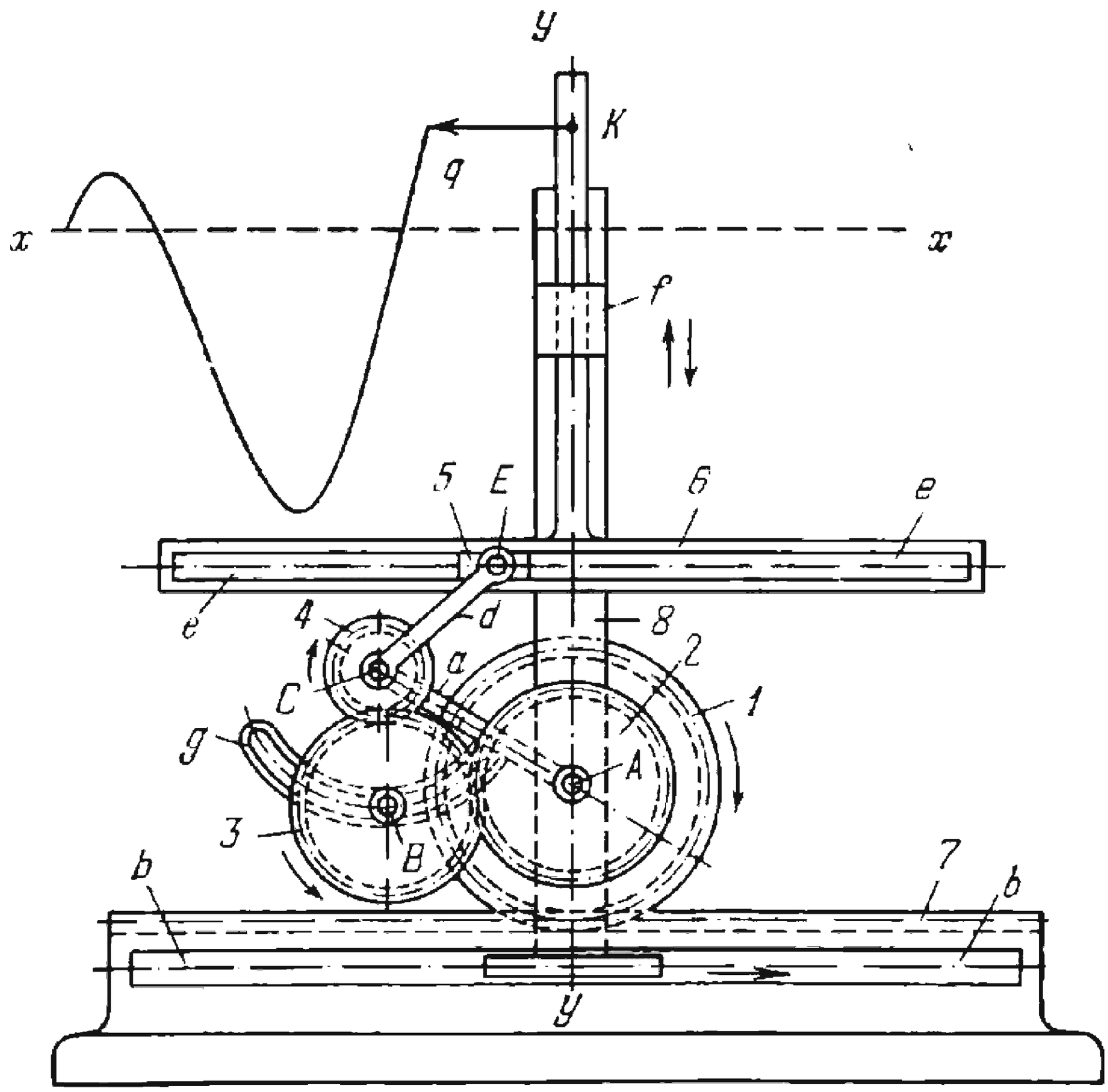

Gear *1* meshes with fixed gear rack *7* and is connected by turning pair *A* to slider *8* which moves along guides *b-b*. Carrier *a* is rigidly attached to gear *1* and is connected by turning pairs *B* and *C* to gears *3* and *4*. Crank *d* is rigidly attached to gear *4* and is connected by turning pair *E* to slider *5* which moves along slot *e-e* of slotted link *6*. Link *6* slides in guide *f* belonging to slider *8*. Gear *3* meshes with gear *4* and with gear *2* which rotates together with gear *1*, being rigidly attached to it, about axis *A* of slider *8*. When gear *1* rotates, it rolls along rack *7*, moving slider *8* along axis *x-x*. Through gears *3* and *4*, gear *2* transmits motion to slider *5* which moves slotted link *6* along axis *y-y*. Any point *K* of link *6* traces curve *q* of the sine type. Curves with different parameters can be obtained by installing other change gears in place of gear *2*. When the gear is changed, the stud of intermediate gear *3* is adjusted and clamped in the required position along circular slot *g* of carrier *a*.

2471	LEVER-GEAR MECHANISM FOR TRACING HYPERBOLAS	LrG Ge

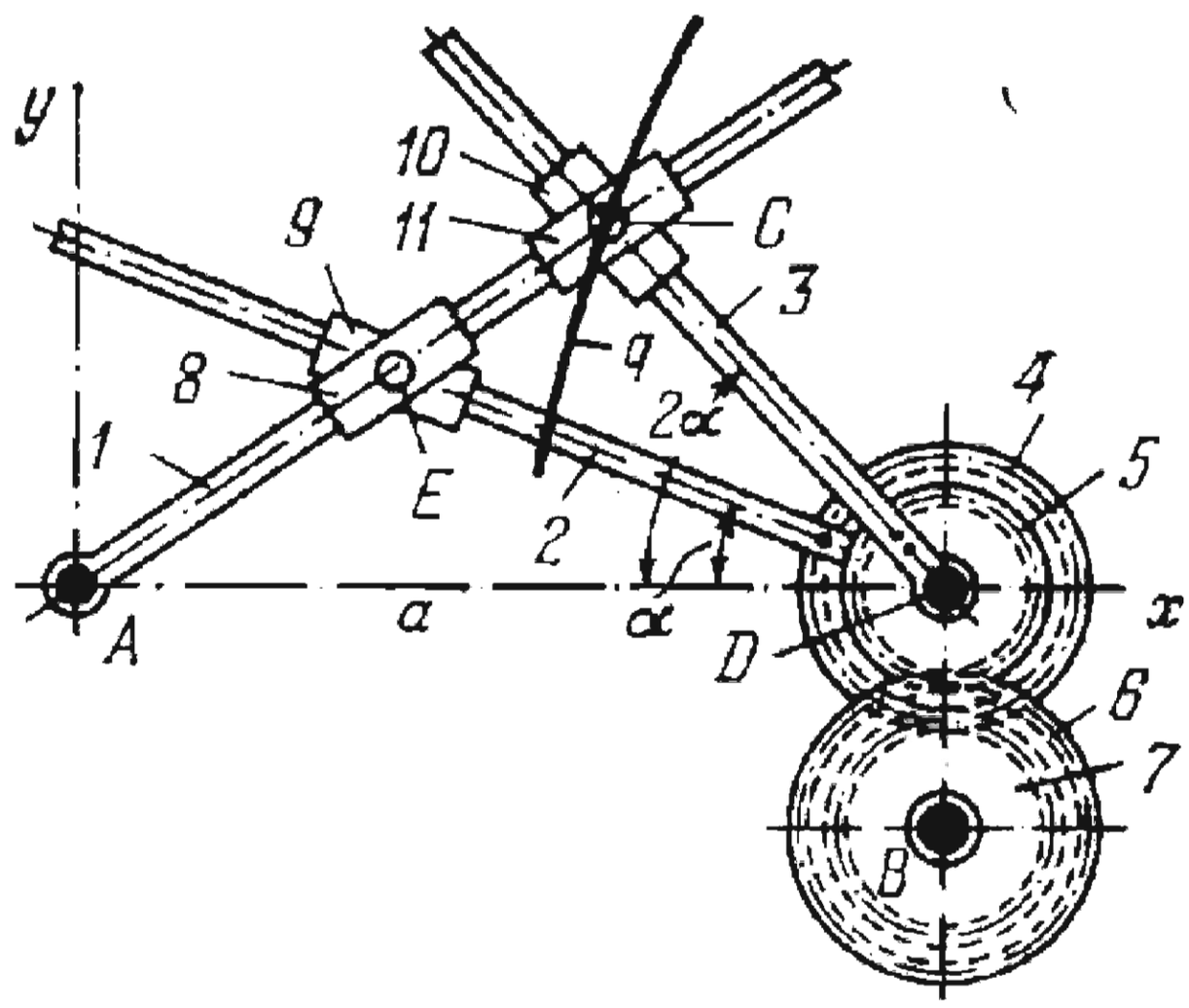

Link *1* turns about fixed axis *A* and is connected by a sliding pair to slider *8* which, in turn, is connected by turning pair *E* to slider *9*. Slider *9* moves along the axis of link *2* which is rigidly attached to gear *4*. Gear *4* turns about fixed axis *D* and meshes with gear *7* which turns about fixed axis *B*. Gear *6* is rigidly attached to gear *7* and meshes with gear *5* which is rigidly attached to link *3*. Link *3* is connected by a sliding pair to slider *10* which moves along the axis of link *3* and is connected by turning pair *C* to slider *11*. Slider *11* moves along the axis of link *1*. The transmission ratio between gears *4* and *7* is $i_{47} = -1$ and that between gears *5* and *6* is $i_{56} = -2$. Point *C* describes portion *q* of a hyperbola.

2472	GERSHGORIN LEVER-GEAR MECHANISM FOR TRACING ELLIPSES	LrG Ge

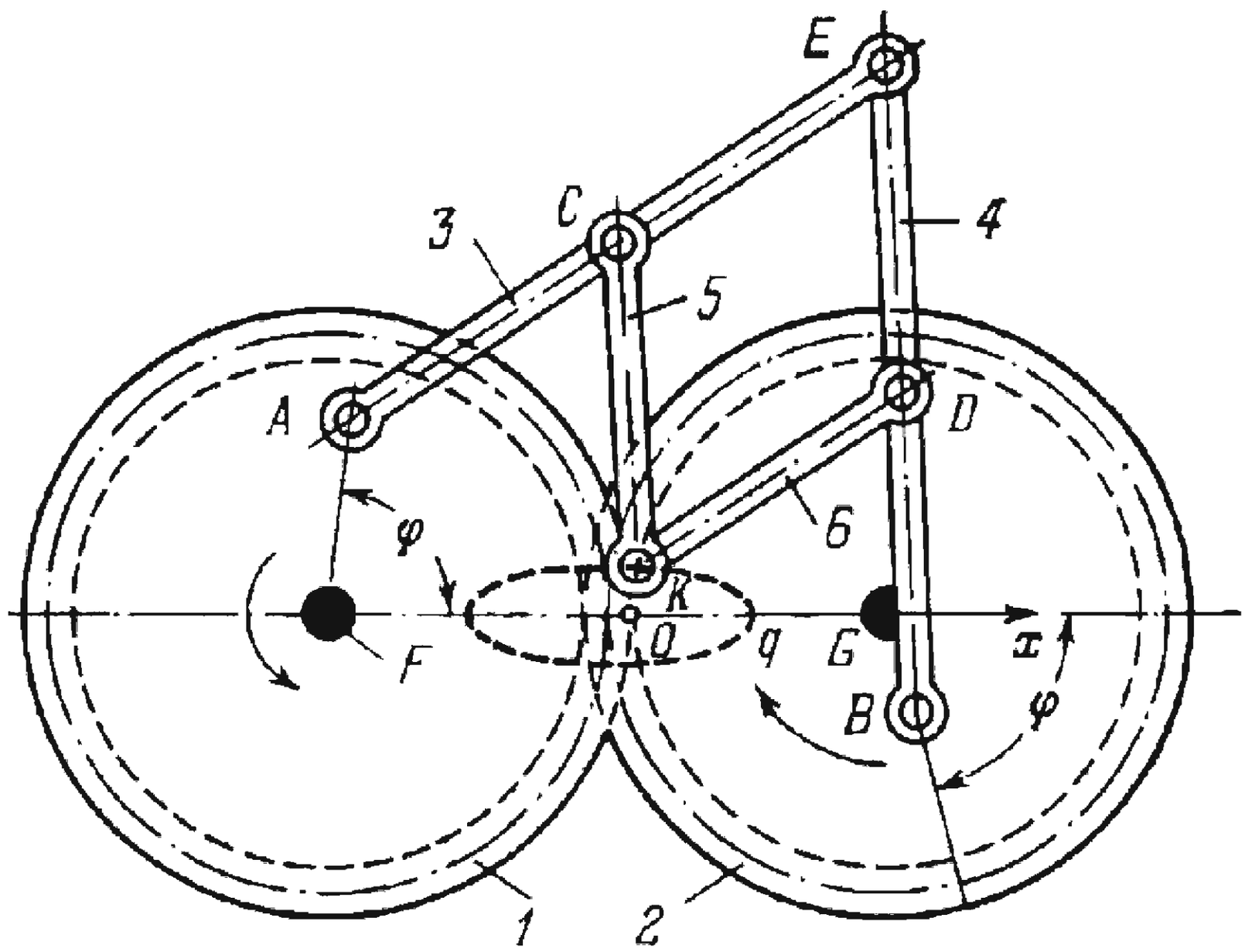

Gear *1* rotates about fixed axis *F* and meshes with gear *2* which has the same pitch diameter and rotates about fixed axis *G*. Gears *1* and *2* are connected by turning pairs *A* and *B* to links *3* and *4* which are connected together by turning pair *E*. Links *3* and *4* are connected by turning pairs *C* and *D* to links *5* and *6* which are connected together by turning pair *K*. The lengths of the links comply with the conditions: $\overline{AC} = \overline{CE} = \overline{ED} = \overline{DB} = \overline{CK} = \overline{DK}$. Lines *FA* and *GB* make equal angles φ with axis *Ox*. When gear *1* rotates, point *K* describes ellipse *q* with the equation

$$\frac{x^2}{a^2} + \frac{y^2}{b^2} = 1$$

where $a = \dfrac{\overline{FA} + \overline{GB}}{2}$ and $b = \dfrac{\overline{FA} - \overline{GB}}{2}$.

2473	LEVER-GEAR MECHANISM FOR TRACING PORTIONS OF PARABOLAS	LrG Ge

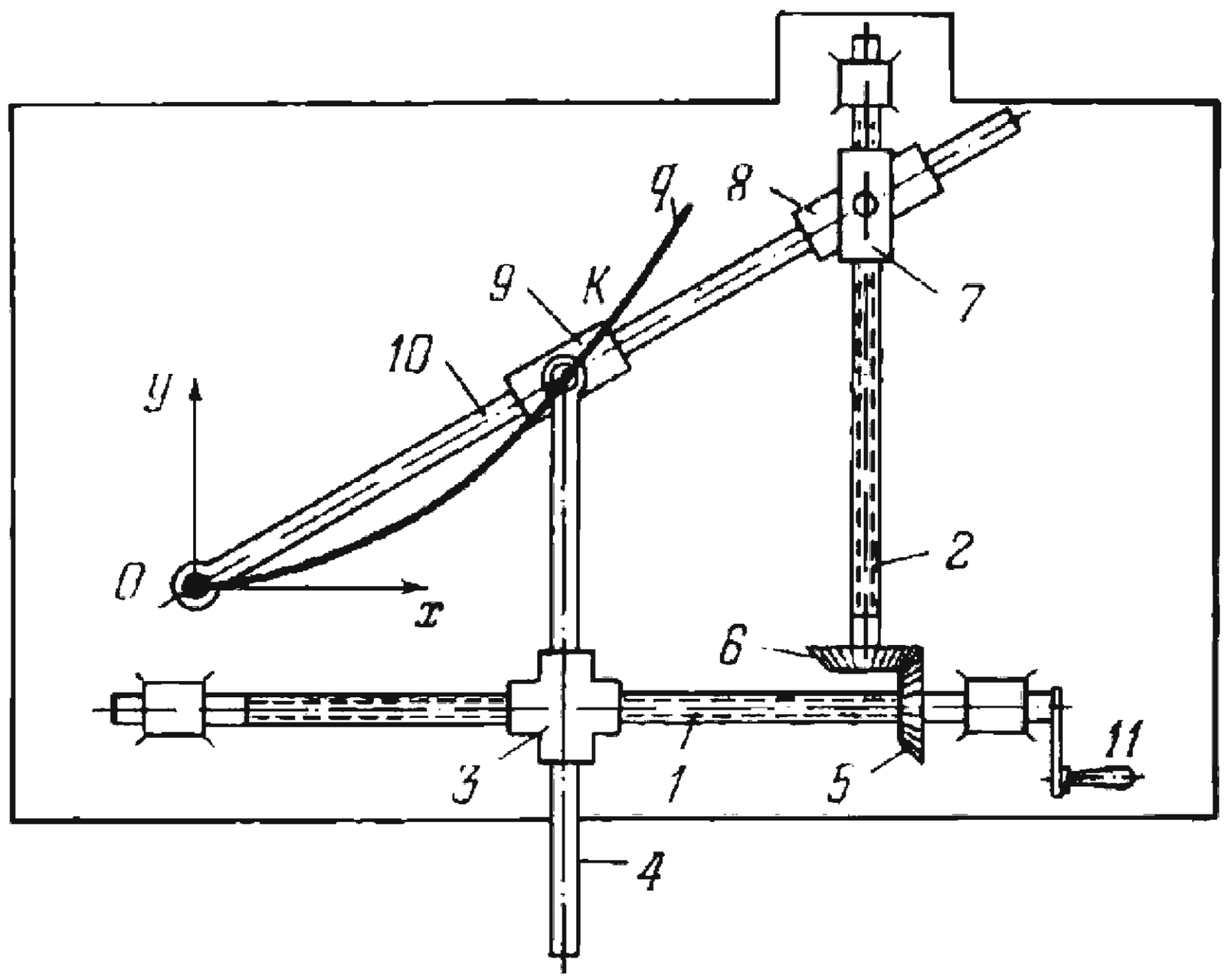

Nut *3* travels along screw *1*. Link *4* slides in the guide of nut *3*. Rotation of screw *1* is transmitted through bevel gears *5* and *6* to screw *2* along which nut *7* travels. Nut *7* is connected by a turning pair to slider *8*. Link *4* is connected by turning pair *K* to slider *9*. Sliders *8* and *9* move along the axis of link *10* which turns about fixed axis *O*. When crank handle *11* of screw *1* is rotated, point *K* of slider *9* describes portion *q* of a parabola with the equation

$$y = \frac{1}{k} x^2$$

where k is the distance from the axis of screw *2* to the origin of coordinates.

2474	LEVER-GEAR MECHANISM FOR TRACING PORTIONS OF CUBIC PARABOLAS	LrG Ge

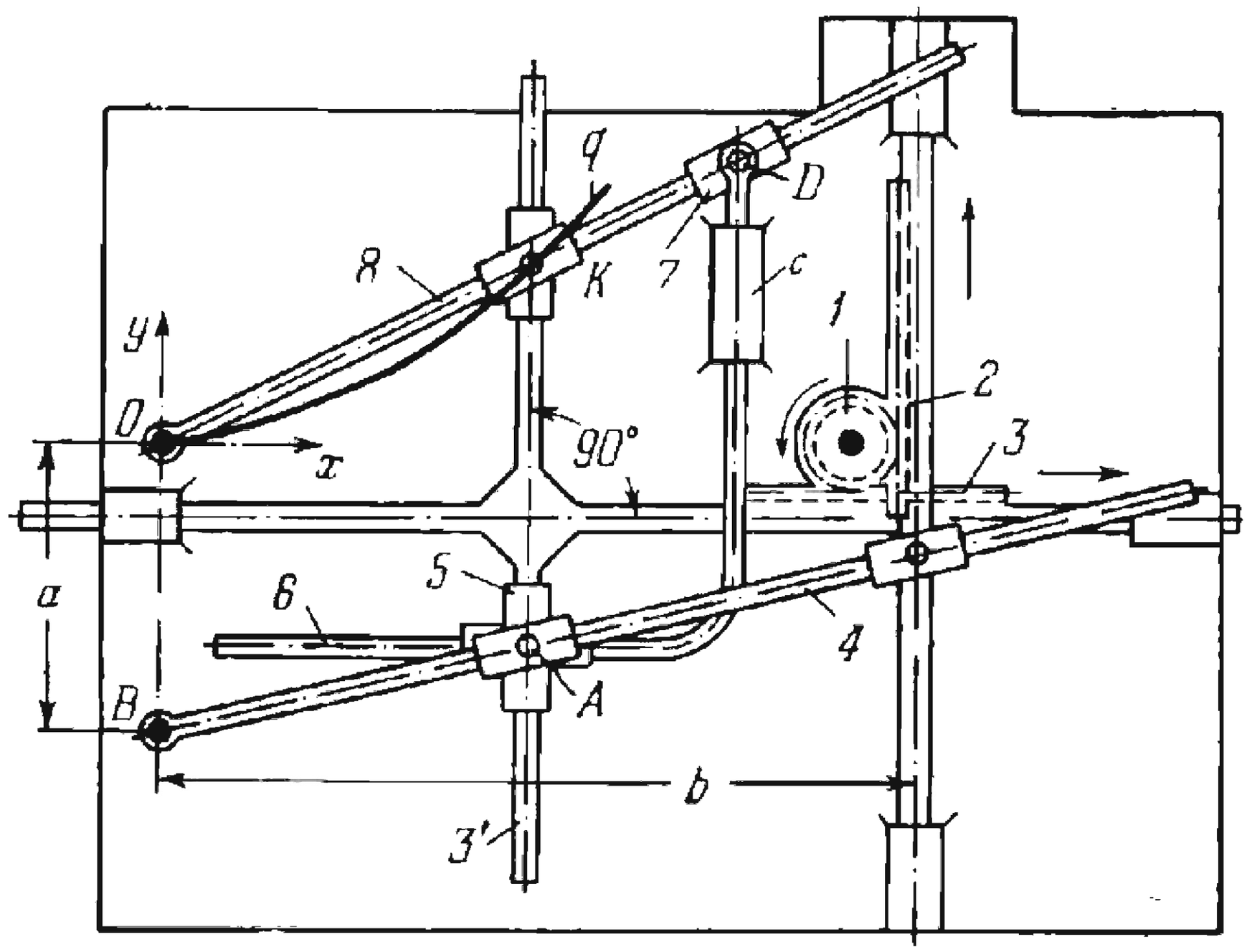

Pinion *1* rotates about a fixed axis and meshes with gear racks *2* and *3*. When pinion *1* rotates counterclockwise, racks *2* and *3* move upward and to the right. This changes the angle of inclination of sliding link *4*, which turns about fixed axis *B*, and the position of point *A* on sliding link *3'*. Cross-shaped slider *5* moves along sliding link *3'* at point *A*. Sliding link *6* passes through slider *5* perpendicular to link *3'* and can move in fixed guide *c* only in the vertical direction. Link *6* is connected by turning pair *D* to slider *7* through which sliding link *8* passes. Link *8* turns about fixed axis *O*. When pinion *1* rotates, point *K* of intersection of sliding links *3'* and *8* describes portion *q* of a cubic parabola with the equation

$$y = \frac{x^3}{ab}$$

where $a = \overline{OB}$ and b is the distance from the axis of rack *2* to the origin of coordinates.

2475	ARTOBOLEVSKY LEVER-GEAR MECHANISM FOR TRACING PEDAL CURVES OF CYCLOIDS OF CIRCLES	LrG Ge

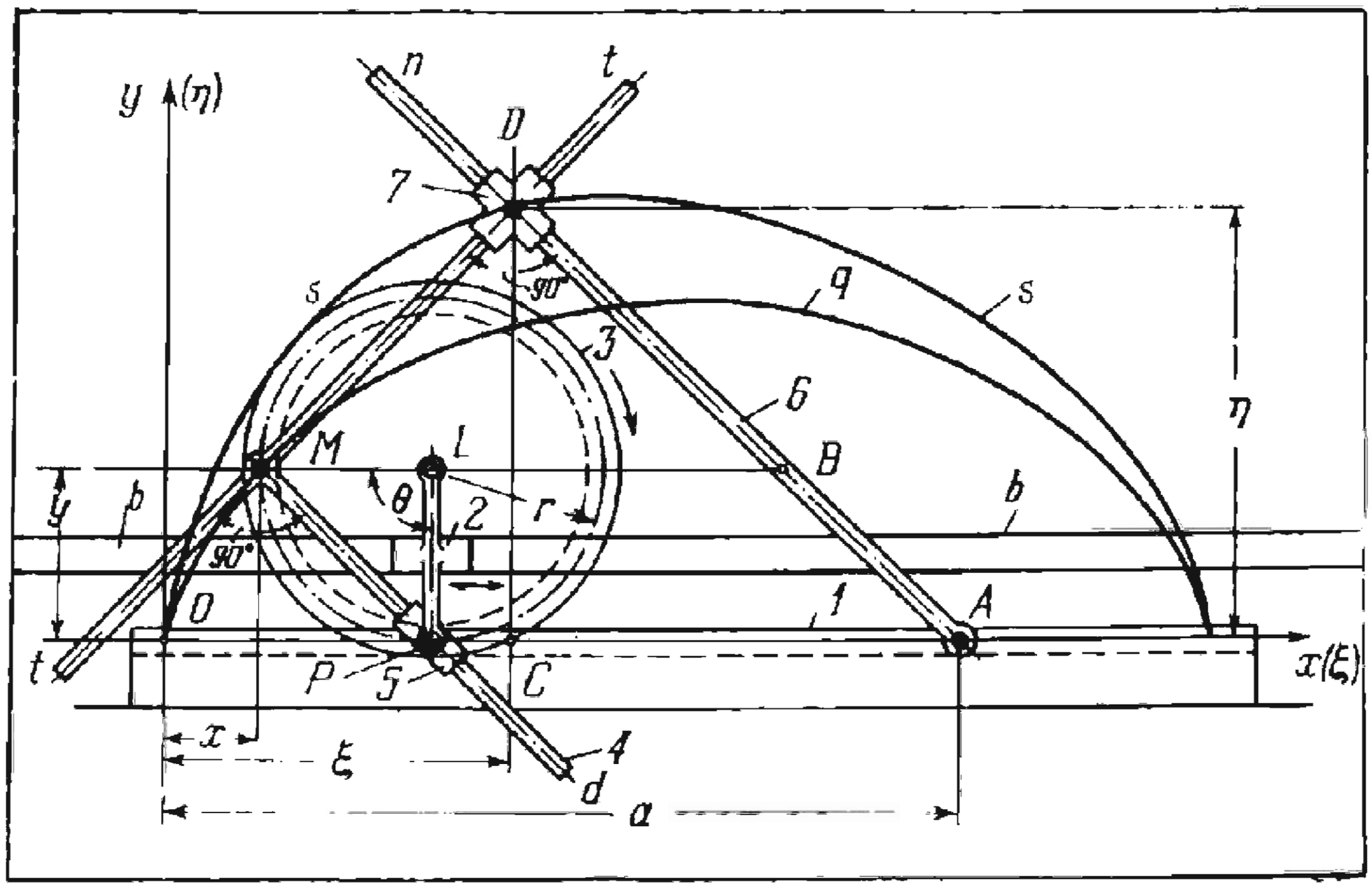

Gear *3* meshes with fixed gear rack *1* and is connected by turning pair *L* to cross-shaped slider *2* which moves along fixed guides *b-b*. Slider *2* is connected by turning pair *P* to slider *5* which moves along axis *Md* of T-shaped link *4*. Link *4* is connected by turning pair *M* to gear *3* and its crosspiece *t-t* moves in cross-shaped slider *7* which has guides perpendicular to each other. Slider *7* moves along axis *An* of link *6* which turns about fixed axis *A* located on axis *Ox* at the arbitrary distance $\overline{OA} = a$. The dimensions of the links comply with the condition: $\overline{ML} = \overline{LP} = r$, where r is the pitch radius of gear *3*. When slider *2* travels with translational motion along guides *b-b*, gear *3* rolls along rack *1* and point *M* describes cycloid *q* of a circle of radius r, with the parametric equations

$$x = r\theta - r \sin\theta \text{ and } y = r - r\cos\theta.$$

Point *D* of slider *7* describes pedal curve *s-s* of cycloid *q* with its centre at point *A*. The parametric equations of the pedal curve are

$$\eta = r(1 - \cos\theta) + \frac{a - r\theta}{2}\sin\theta$$

and

$$\xi = a - r\sin\theta - \frac{a - r\theta}{2}(1 + \cos\theta)$$

where θ is angle *MLP*.

2476	ARTOBOLEVSKY LEVER-GEAR MECHANISM FOR TRACING PEDAL CURVES OF CYCLOIDS OF CIRCLES	LrG Ge

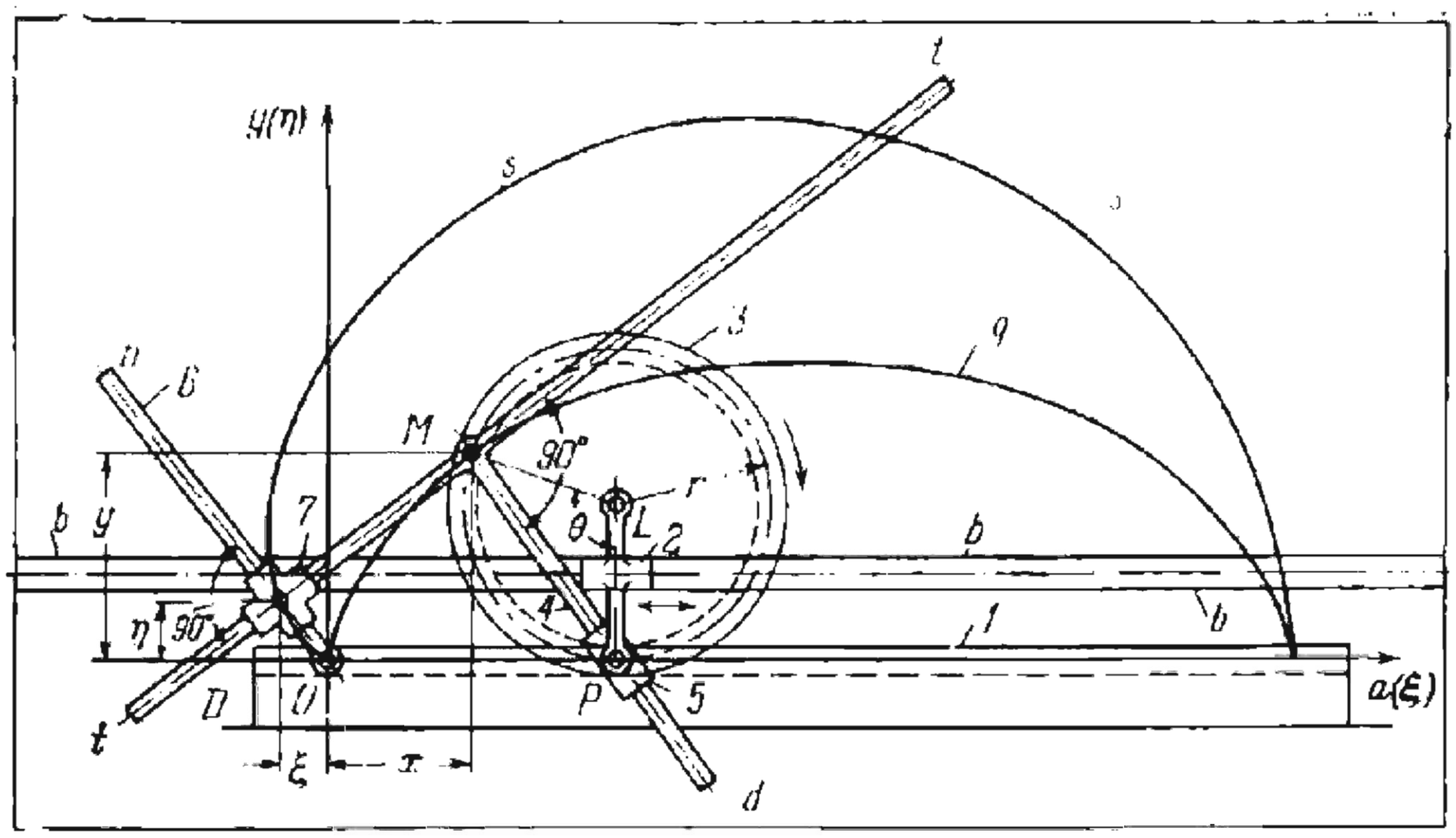

Gear *3* meshes with fixed gear rack *1* and is connected by turning pair *L* to cross-shaped slider *2* which moves along fixed guides *b-b*. Slider *2* is connected by turning pair *P* to slider *5* which moves along axis *Md* of T-shaped link *4*. Link *4* is connected by turning pair *M* to gear *3* and its crosspiece *t-t* moves in cross-shaped slider *7* which has guides perpendicular to each other. Slider *7* moves along axis *On* of link *6* which turns about fixed axis *O*. The dimensions of the links comply with the condition: $\overline{ML} = \overline{LP} = r$, where *r* is the pitch radius of gear *3*. When slider *2* travels with translational motion along guides *b-b*, gear *3* rolls along rack *1* and point *M* describes cycloid *q* of a circle of radius *r*, with the parametric equations

$$x = r\theta - r\sin\theta \quad \text{and} \quad y = r - r\cos\theta.$$

Point *D* of slider *7* describes pedal curve *s-s* of cycloid *q* with its centre at point *O*. The parametric equations of the pedal curve are

$$\eta = r\left(1 - \cos\theta - \frac{\theta}{2}\sin\theta\right)$$

and

$$\xi = r\left[\frac{\theta}{2}(1 + \cos\theta) - \sin\theta\right]$$

where θ is angle *MLP*.

2477	ARTOBOLEVSKY LEVER-GEAR MECHANISM FOR TRACING PEDAL CURVES OF CYCLOIDS OF CIRCLES	LrG Ge

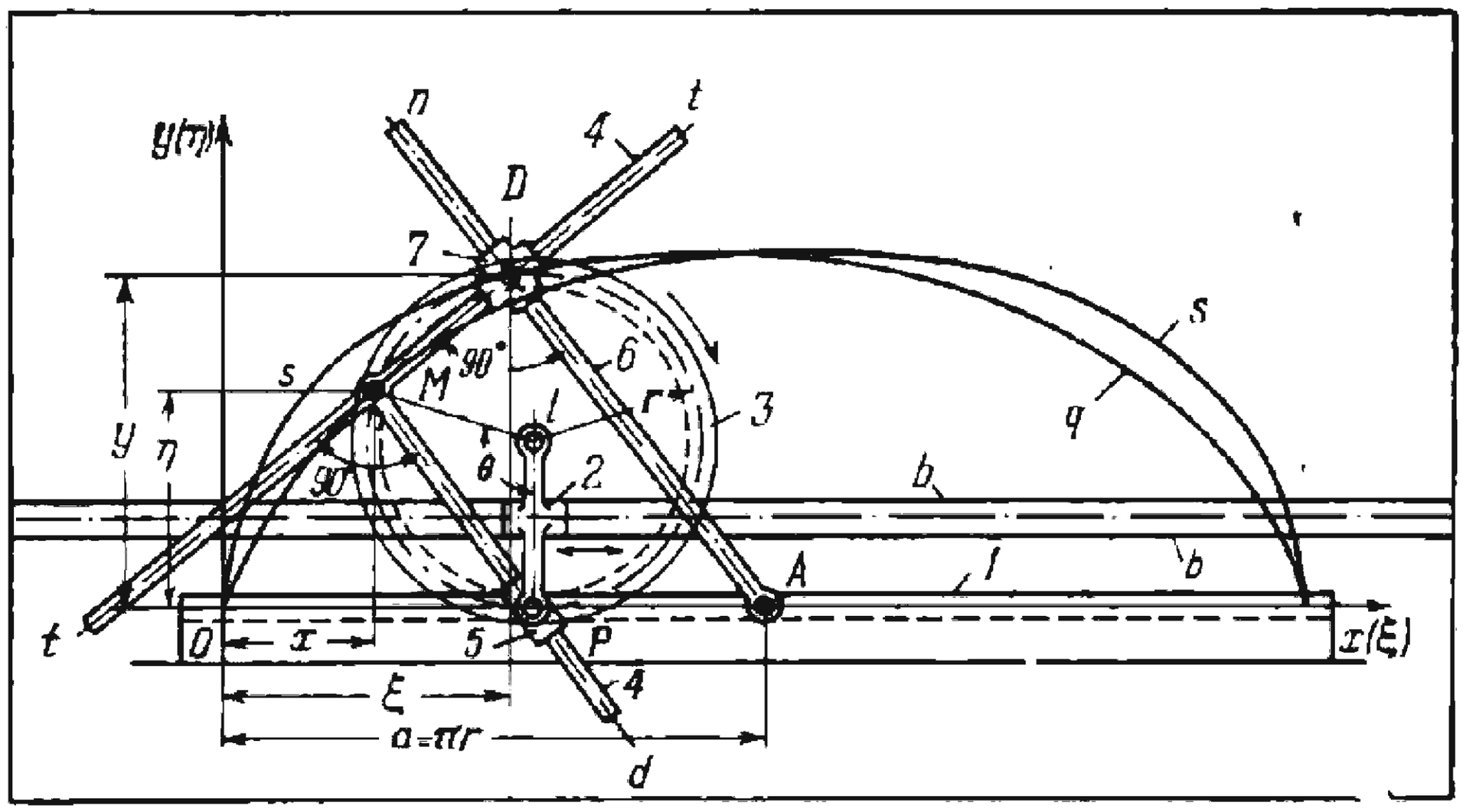

Gear *3* meshes with fixed gear rack *1* and is connected by turning pair *L* to cross-shaped slider *2* which moves along fixed guides *b-b*. Slider *2* is connected by turning pair *P* to slider *5* which moves along axis *Md* of T-shaped link *4*. Link *4* is connected by turning pair *M* to gear *3* and its crosspiece *t-t* moves in cross-shaped slider *7* which has guides perpendicular to each other. Slider *7* moves along axis *An* of link *6* which turns about fixed axis *A* located on axis *Ox* at the distance $\overline{OA}$. The dimensions of the links comply with the conditions: $\overline{OA} = \pi r$ and $\overline{ML} = \overline{LP} = r$, where r is the pitch radius of gear *3*. When slider *2* travels with translational motion along guides *b-b*, gear *3* rolls along rack *1* and point *M* describes cycloid *q* of a circle of radius r, with the parametric equations

$$x = r\theta - r\sin\theta \text{ and } y = r - r\cos\theta.$$

Point *D* of slider *7* describes pedal curve *s-s* of cycloid *q* with its centre at point *A*. The parametric equations of the pedal curve are

$$\eta = r\left(1 - \cos\theta + \frac{\pi - \theta}{2}\sin\theta\right)$$

and

$$\xi = r\left[\pi - \sin\theta - \frac{\pi - \theta}{2}(1 + \cos\theta)\right]$$

where θ is angle *MLP*.

2478	SLOTTED-LEVER-GEAR MECHANISM FOR TRACING COMPLEX CONNECTING-ROD CURVES	LrG Ge

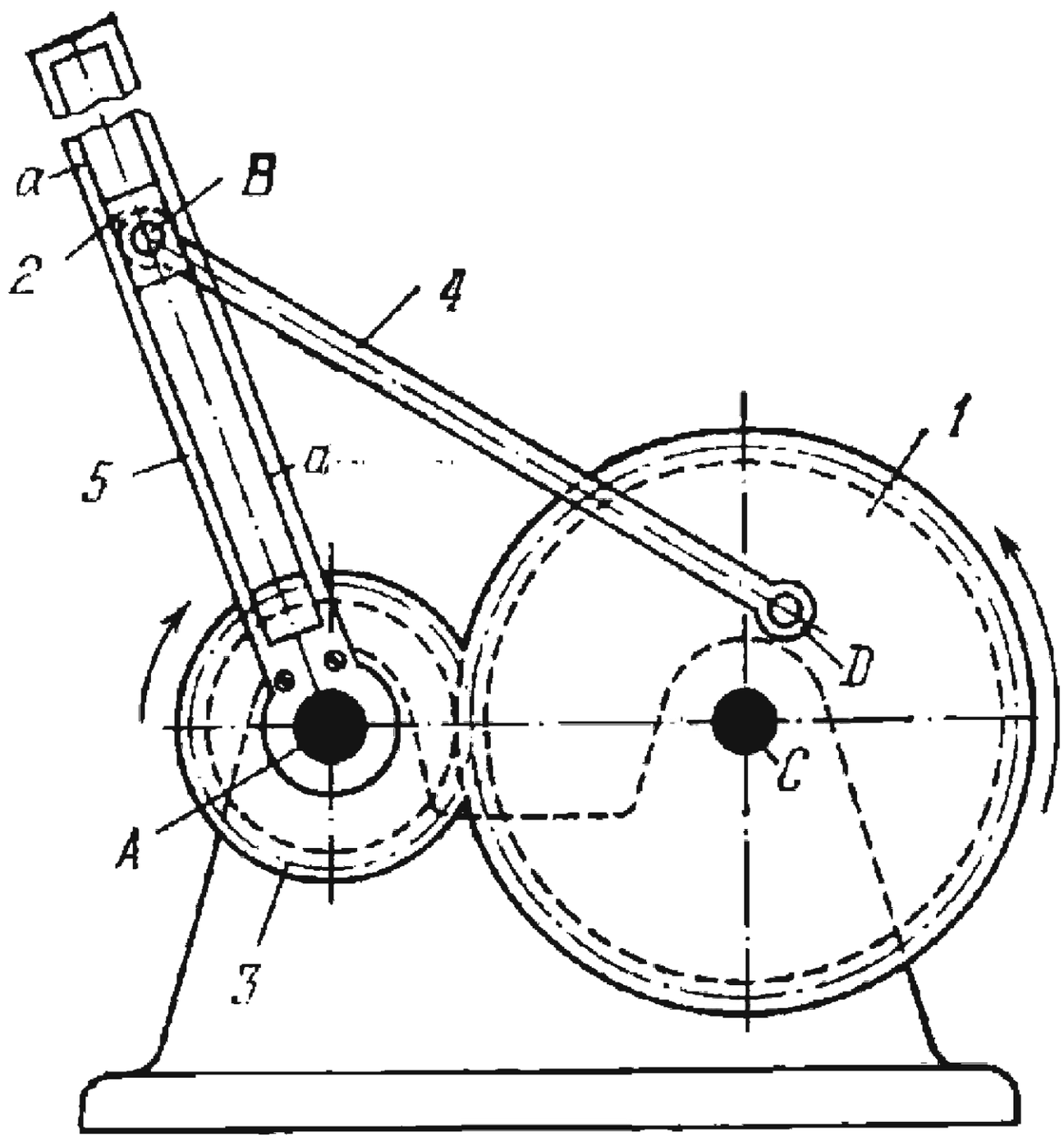

Gear *1* rota es about fixed axis *C* and meshes with gear *3* which rotates about fixed axis *A*. Link *4* is connected by turning pairs *D* and *B* to gear *1* and to slider *2* which moves along slot *a-a* of slotted lever *5*. Lever *5* is rigidly attached to gear *3*. When gear *1* rotates, point *B* of slider *2* describes a complex connecting-rod curve.

2479	LEVER-GEAR MECHANISM FOR TRACING COMPLEX CONNECTING-ROD CURVES	LrG Ge

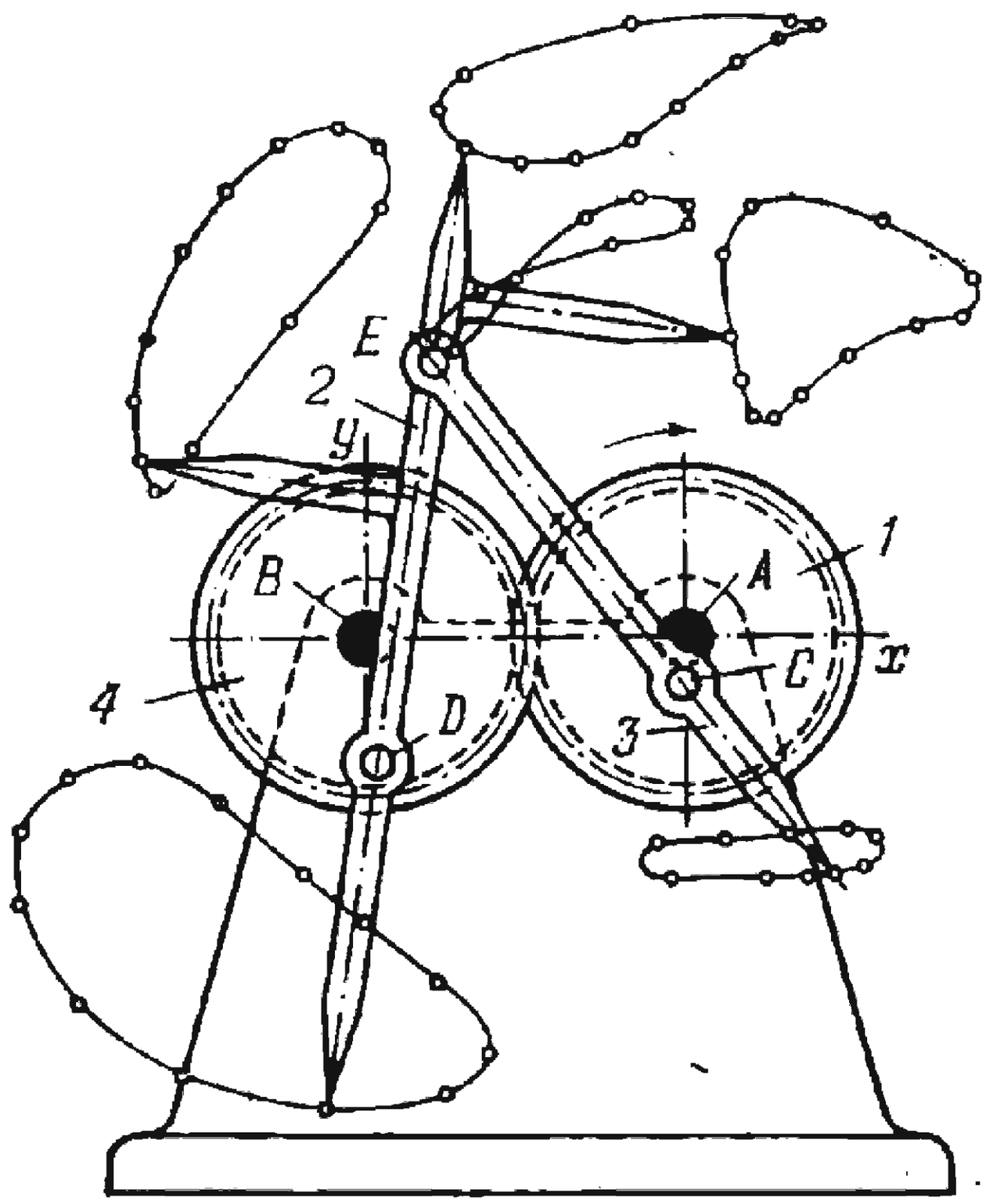

Meshing gears *1* and *4*, of equal pitch diameter, rotate about fixed axes *A* and *B* and are connected by turning pairs *C* and *D* to links *3* and *2* which are connected together by turning pair *E*. The lengths of the links comply with the condition: $\overline{CE} = \overline{DE}$. In the initial position (as shown), lines *AC* and *BD* are parallel to vertical axis *By* and are directed downwards. When gear *1* rotates, various points of connecting rods *2* and *3* describe the complex connecting-rod curves shown. The shapes of the curves can be changed by varying the distances $\overline{AC}$ and $\overline{BD}$.

2480	LEVER-GEAR MECHANISM FOR TRACING COMPLEX CONNECTING-ROD CURVES	LrG Ge

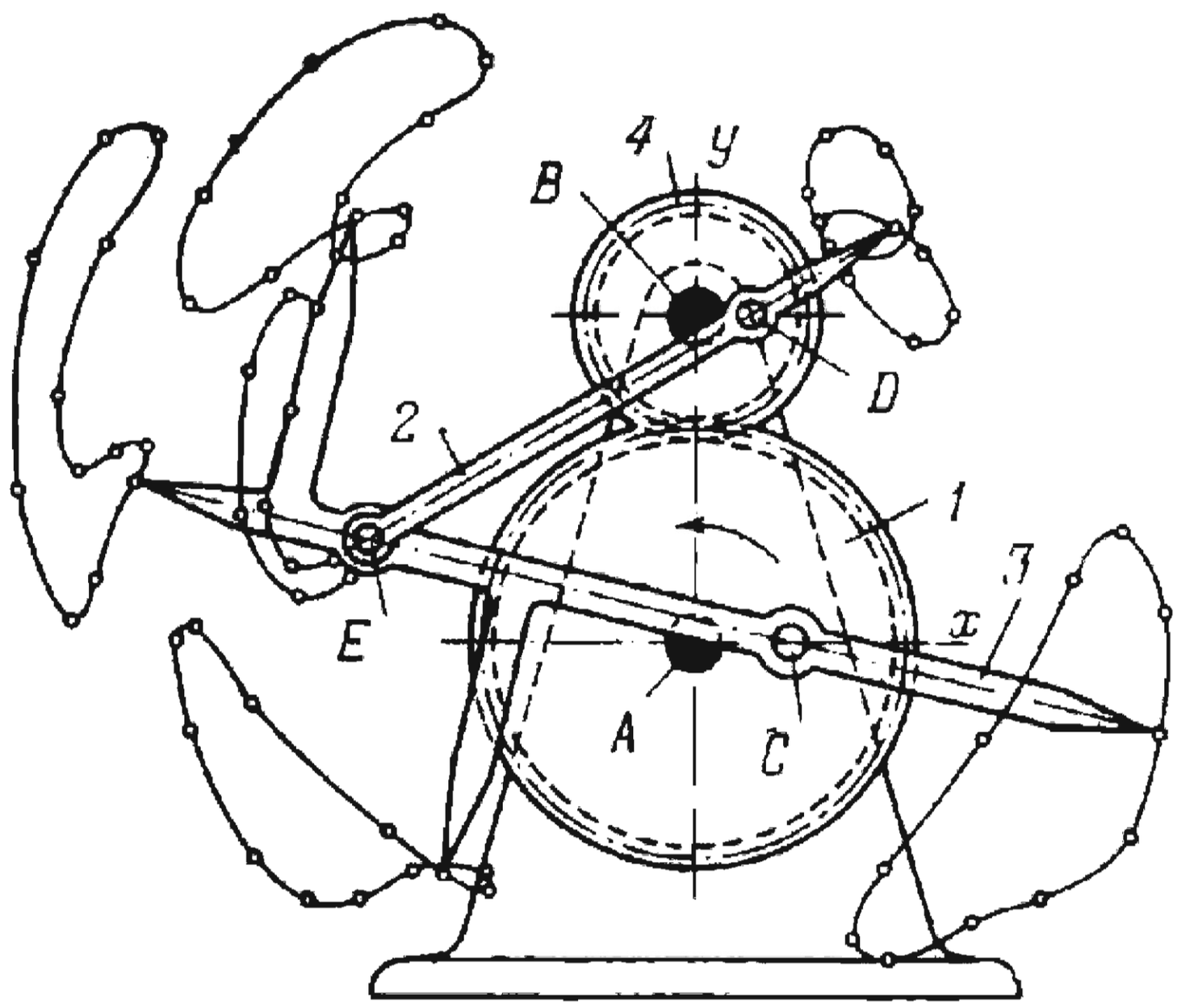

Meshing gears *1* and *4* rotate about fixed axes *A* and *B* and are connected by turning pairs *C* and *D* to links *3* and *2* which are connected together by turning pair *E*. The dimensions of the links comply with the conditions: $r_1 = 2r_4$ and $\overline{CE} = \overline{DE} = 2r_1$, where r_1 and r_4 are the pitch radii of gears *1* and *4*. In the initial position (as shown), lines *AC* and *BD* are parallel to horizontal axis *Ax* and are directed to the right. When gear *1* rotates, various points of connecting rods *2* and *3* describe the complex connecting-rod curves shown. The shapes of the curves can be changed by varying the distances $\overline{AC}$ and $\overline{BD}$.

2481	LEVER-GEAR MECHANISM FOR TRACING COMPLEX CONNECTING-ROD CURVES	LrG Ge

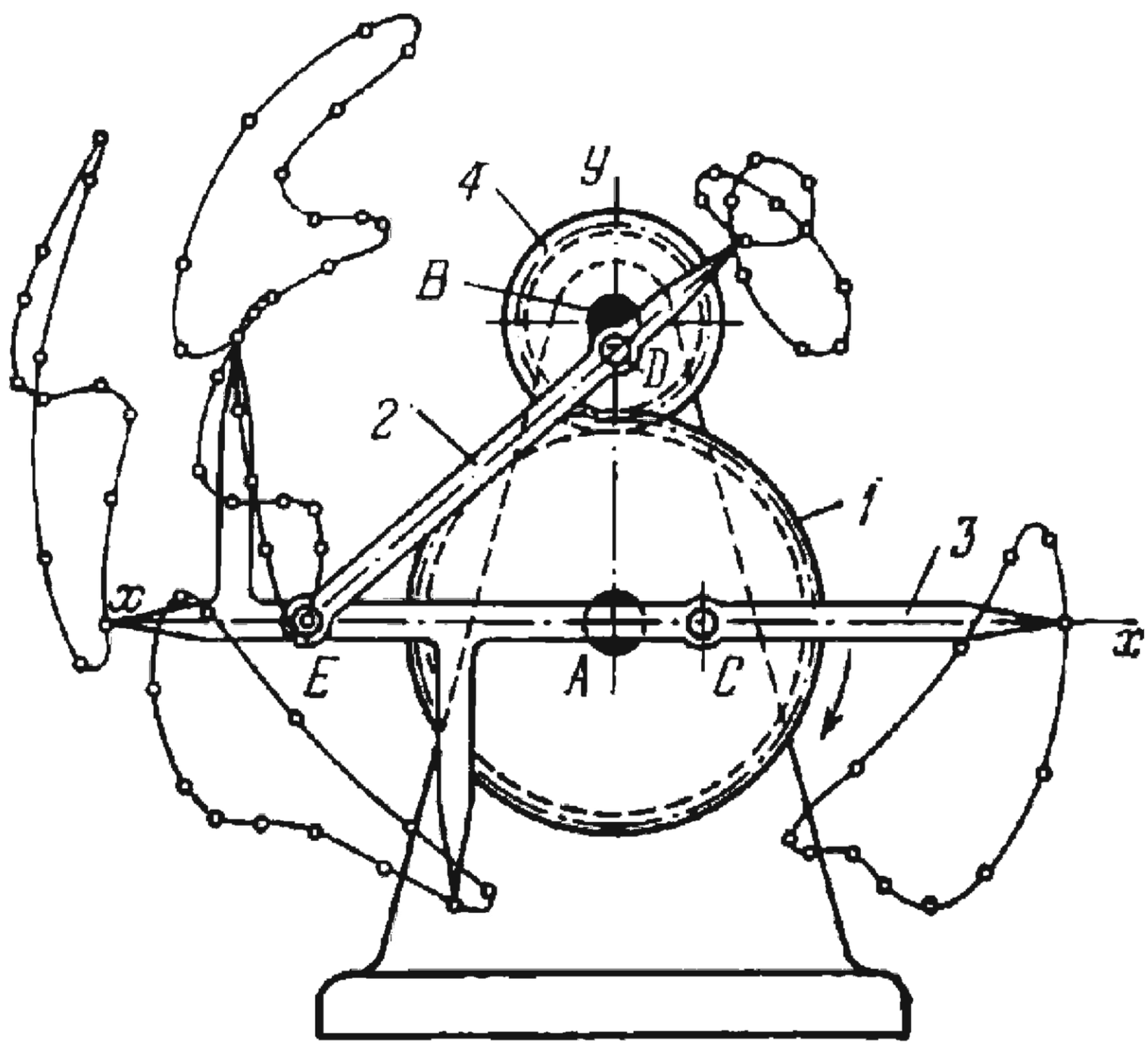

Meshing gears *1* and *4* rotate about fixed axes *A* and *B* and are connected by turning pairs *C* and *D* to links *3* and *2* which are connected together by turning pair *E*. The dimensions of the links comply with the conditions: $r_1 = 2r_4$ and $\overline{CE} = \overline{DE} = 2r_1$, where r_1 and r_4 are the pitch radii of gears *1* and *4*. In the initial position (as shown), line *AC* coincides with axis *Ax* and is directed to the right, and line *BD* coincides with axis *Ay* and is directed downwards. When gear *1* rotates, various points of connecting rods *2* and *3* describe the complex connecting-rod curves shown. The shapes of the curves can be changed by varying the distances $\overline{AC}$ and $\overline{BD}$.

2482	LEVER-GEAR MECHANISM FOR TRACING COMPLEX CONNECTING-ROD CURVES	LrG Ge

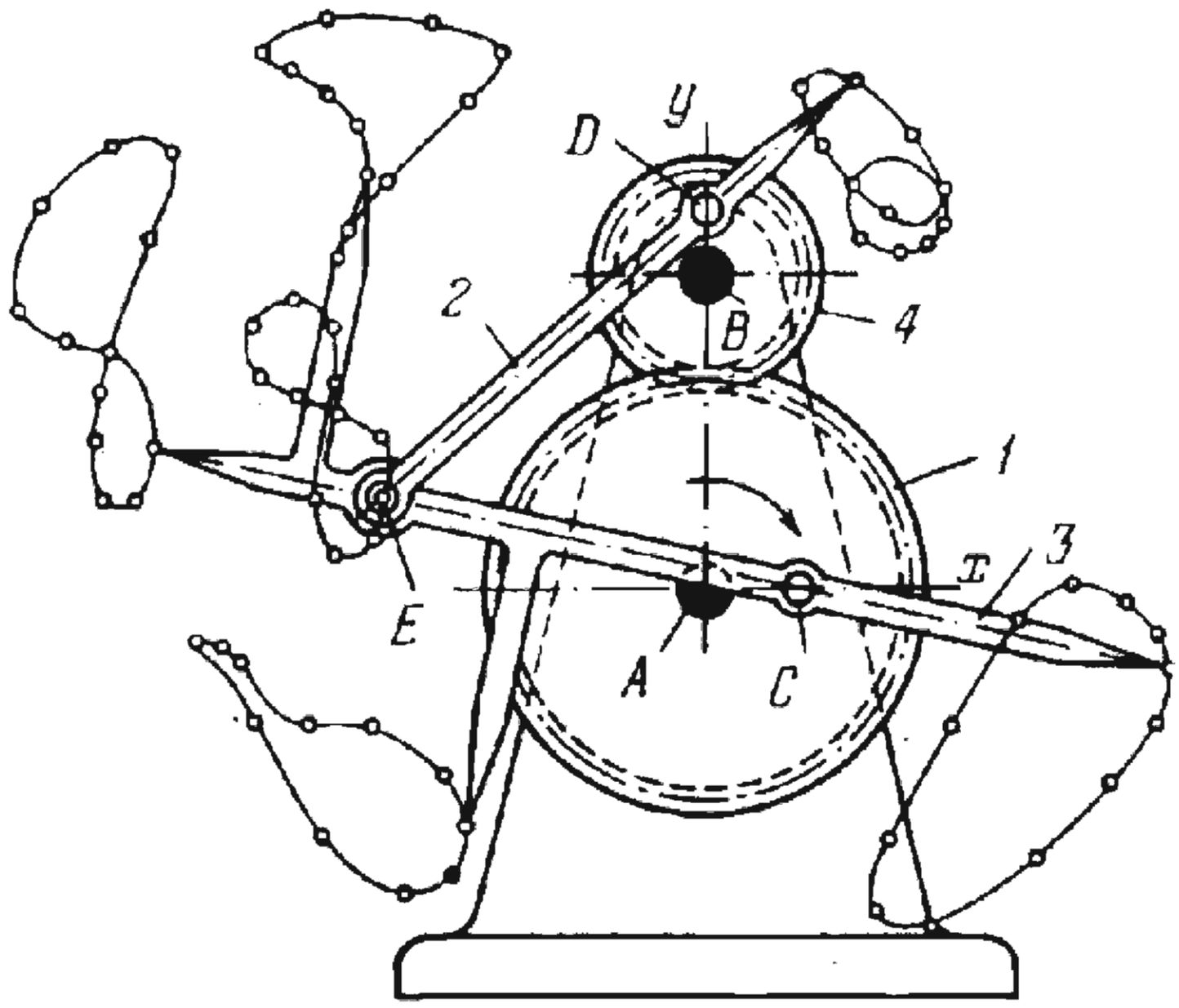

Meshing gears *1* and *4* rotate about fixed axes *A* and *B* and are connected by turning pairs *C* and *D* to links *3* and *2* which are connected together by turning pair *E*. The dimensions of the links comply with the conditions: $r_1 = 2r_4$ and $\overline{CE} = \overline{DE} = 2r_1$, where r_1 and r_4 are the pitch radii of gears *1* and *4*. In the initial position (as shown), line *AC* coincides with axis *Ax* and is directed to the right, and line *BD* coincides with axis *Ay* and is directed upwards. When gear *1* rotates, various points of connecting rods *2* and *3* describe the complex connecting-rod curves shown. The shapes of the curves can be changed by varying the distances $\overline{AC}$ and $\overline{BD}$.

2483	LEVER-GEAR MECHANISM FOR TRACING COMPLEX CONNECTING-ROD CURVES	LrG Ge

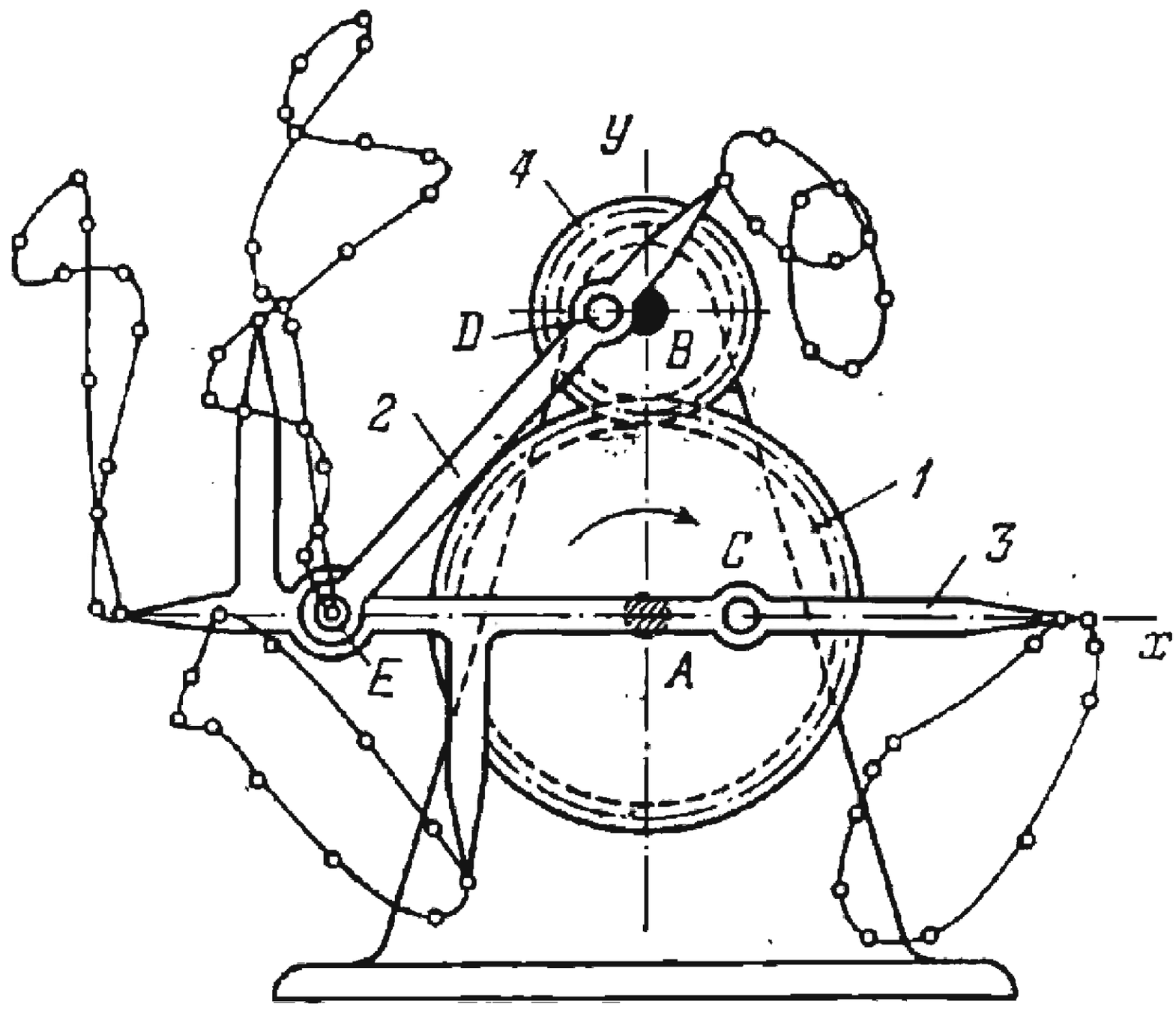

Meshing gears *1* and *4* rotate about fixed axes *A* and *B* and are connected by turning pairs *C* and *D* to links *3* and *2* which are connected together by turning pair *E*. The dimensions of the links comply with the conditions: $r_1 = 2r_4$ and $\overline{CE} = \overline{ED} = 2r_1$, where r_1 and r_4 are the pitch radii of gears *1* and *4*. In the initial position (as shown), lines *AC* and *BD* are parallel to horizontal axis *Ax* and are directed: *AC* to the right and *BD* to the left. When gear *1* rotates, various points of connecting rods *2* and *3* describe the complex connecting-rod curves shown. The shapes of the curves can be changed by varying the distances $\overline{AC}$ and $\overline{BD}$.

2484	SLOTTED-LEVER-GEAR MECHANISM FOR TRACING COMPLEX CONNECTING-ROD CURVES	LrG Ge

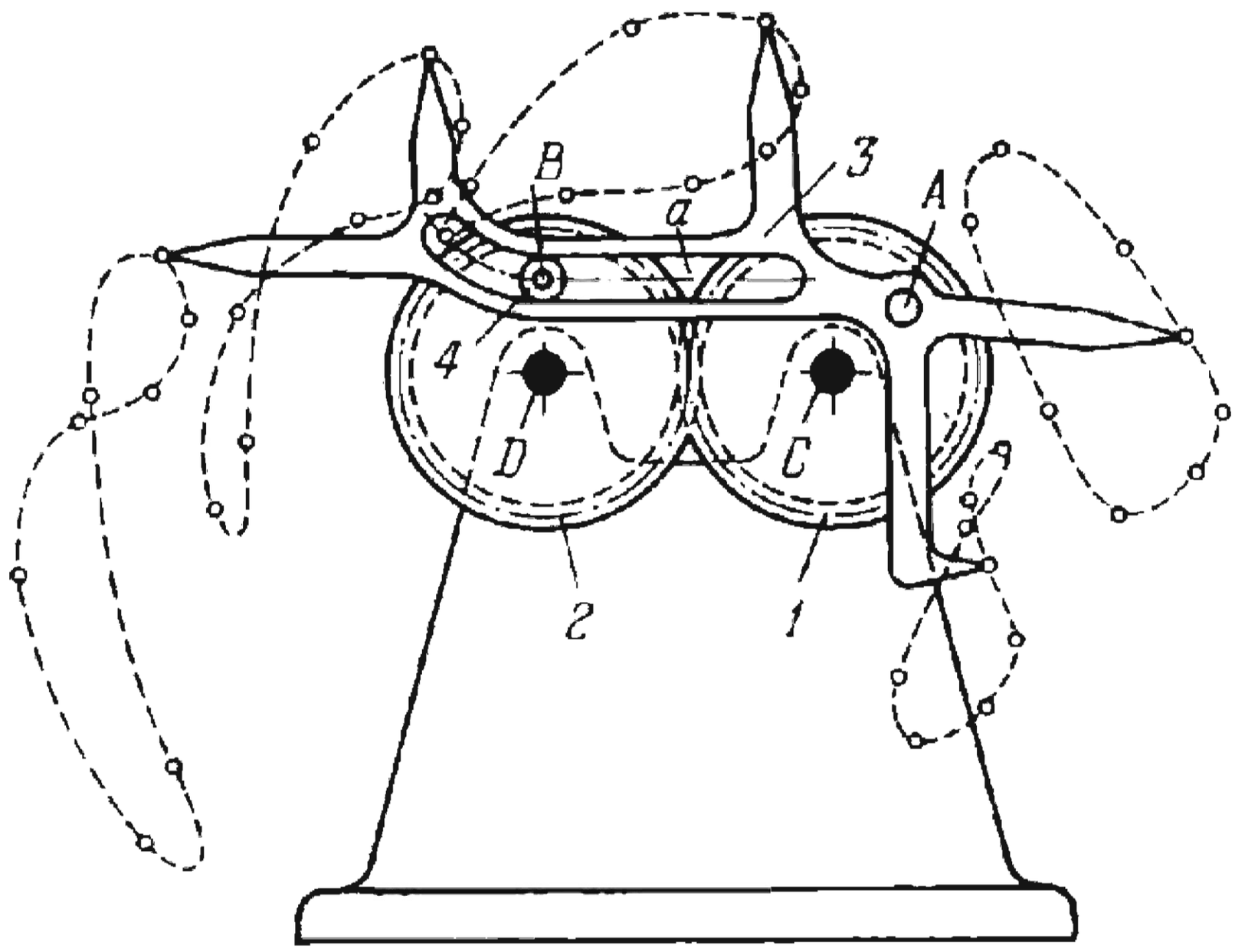

Gear *1* rotates about fixed axis *C* and meshes with gear *2* which rotates about fixed axis *D*. Gear *1* is connected by turning pair *A* to slotted link *3*. Roller *4* is connected by turning pair *B* to gear *2* and slides along slot *a* of link *3*. When gear *1* rotates, various points of slotted link *3* describe complex connecting-rod curves whose shape depends upon the dimensions of the links and the shape of slot *a* in link *3*.

2485	LEVER-GEAR SCOTCH-YOKE PLANETARY MECHANISM FOR TRACING OVALS	LrG Ge

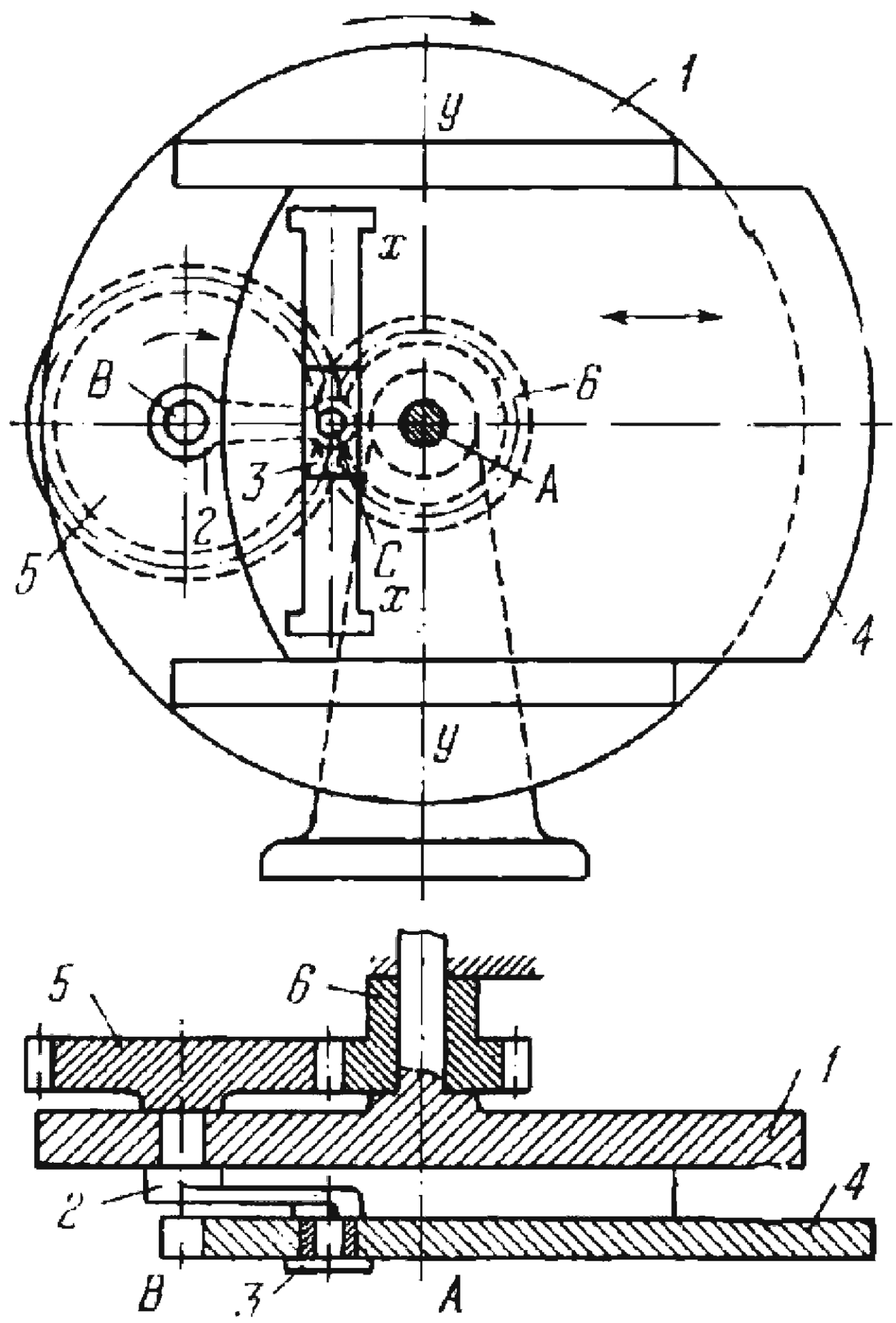

The mechanism is intended for tracing ovals. Faceplate *1* rotates about fixed axis *A* and is connected by turning pair *B* to planet gear *5* which meshes with fixed sun gear *6*. Crank *2* is rigidly attached to gear *5* and is connected by turning pairs *B* and *C* to faceplate *1* and to slider *3* which moves along vertical slot *x-x* of slide *4*. Slide *4* moves along horizontal fixed guides *y-y*. When driving faceplate *1* rotates, gear *5* rolls around gear *6* and a pencil attached to slide *4* describes an oval on faceplate *1*. The shape of the oval depends upon the transmission ratio of the gears.

2486	LEVER-GEAR COSINE GENERATOR	LrG MO

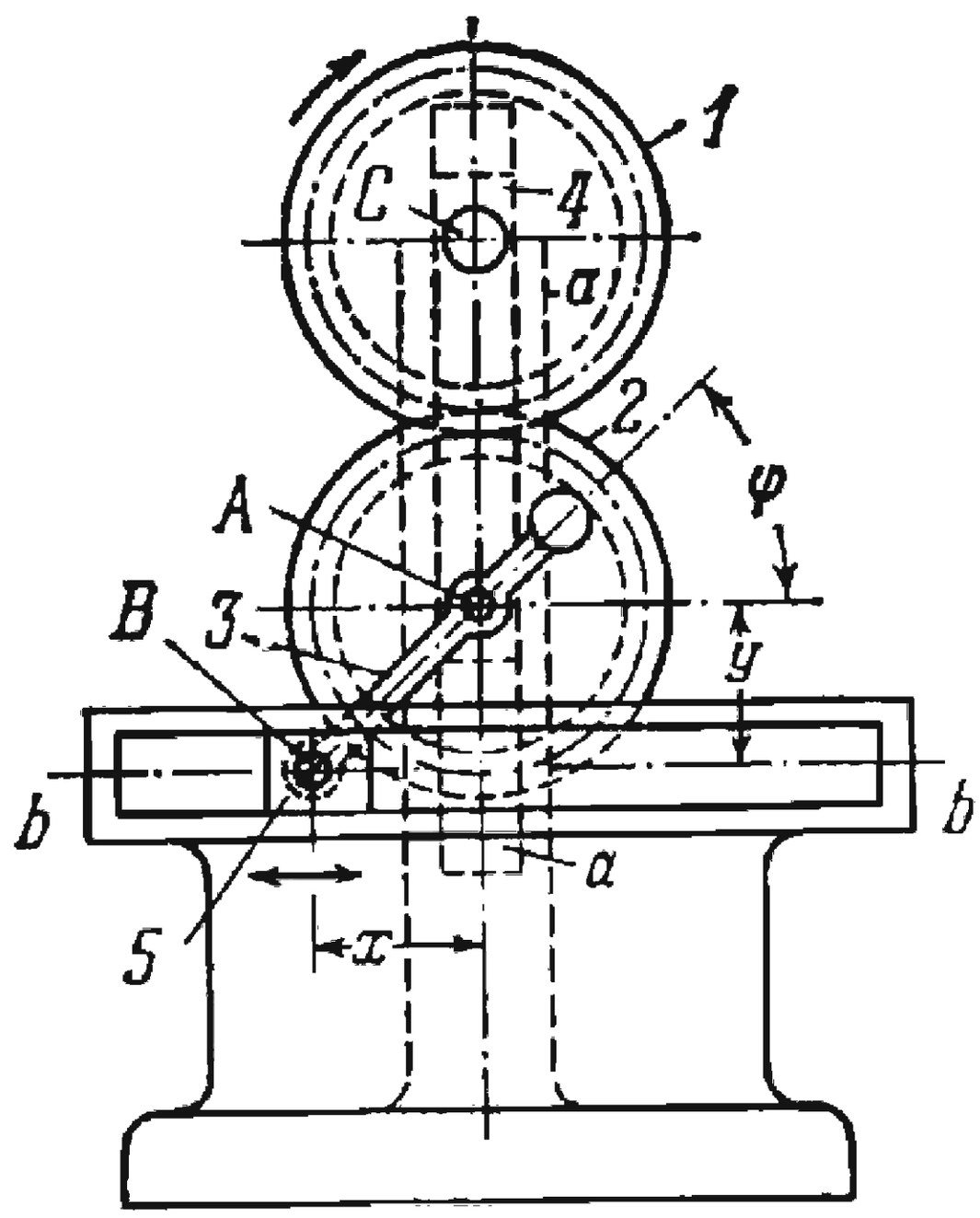

Gears *1* and *2* of equal pitch diameter rotate about axes *C* and *A*, belonging to slider *4* which moves along vertical fixed guides *a-a*. Link *3* is rigidly attached to gear *2* and is connected by turning pair *B* to slider *5* which moves along horizontal fixed guides *b-b*. When driving gear *1* turns, sliders *5* and *4* move along guides *b-b* and *a-a*. The displacements x and y of the sliders are related to angle φ of rotation of gears *1* and *2* by the conditions

$$x = l \cos \varphi \text{ and } y = l \sin \varphi$$

where l is the distance between centres *A* and *B*.

2487	SCREW-GEAR TANGENT GENERATOR	LrG MO

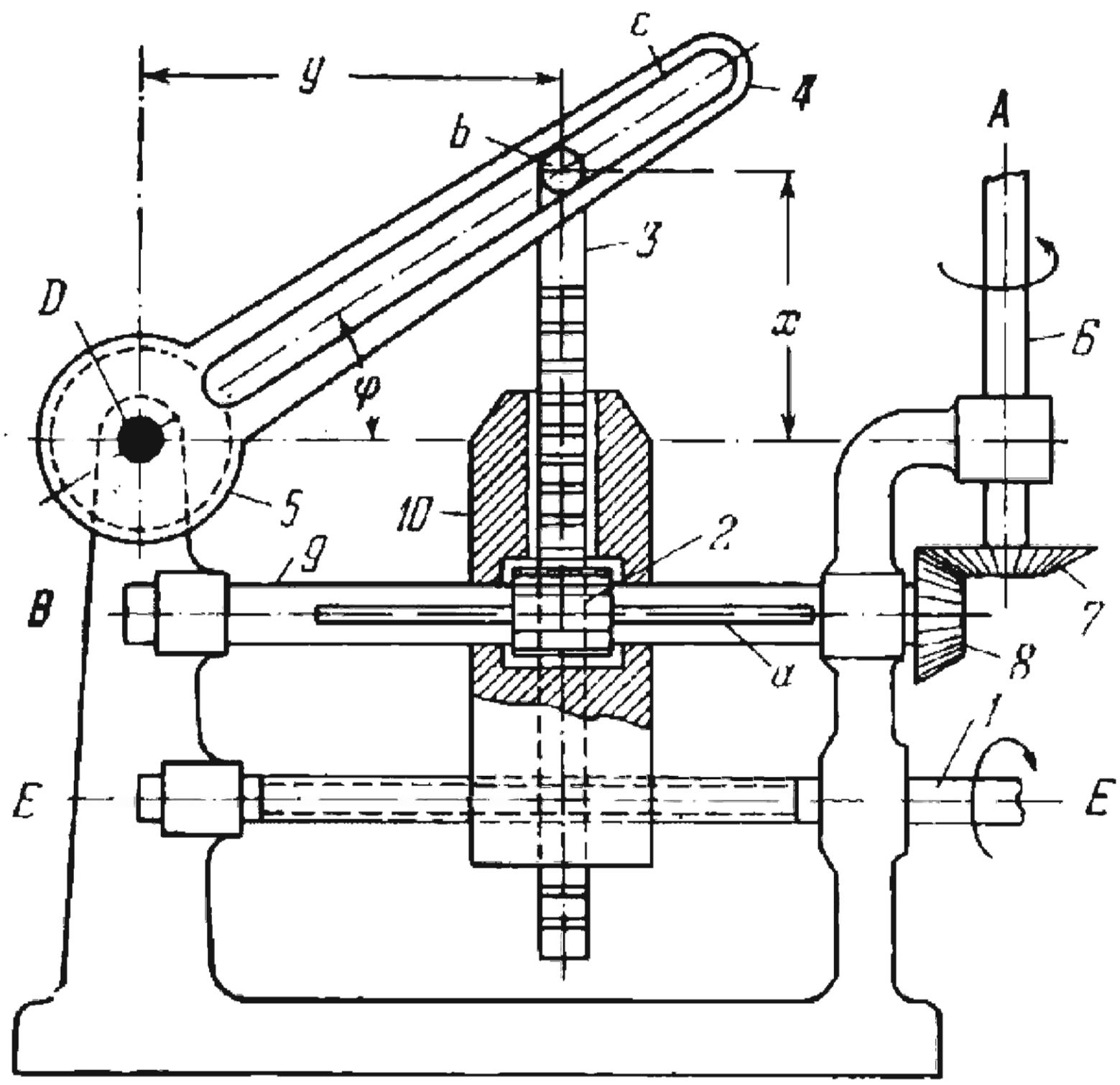

Shaft *6* rotates about fixed axis *A* and, through bevel gears *7* and *8*, rotates shaft *9* about fixed axis *B*. Shaft *9* carries pinion *2* which slides freely along the shaft on key *a*. Pinion *2* meshes with gear rack *3* which slides in housing *10*. Pin *b* of rack *3* slides along slot *c* of link *4* which turns about fixed axis *D*. Quantity x is set up by turning shaft *6*. Quantity y is set up by turning screw *1* about fixed axis *E*. Screw *1* is connected by a screw pair to housing *10*. Angle φ of rotation of link *5* is proportional to the linear displacements x and y of rack *3*:

$$\varphi = \arctan \frac{x}{y} .$$

2488	LEVER-GEAR DIFFERENTIAL MULTIPLIER MECHANISM	LrG MO

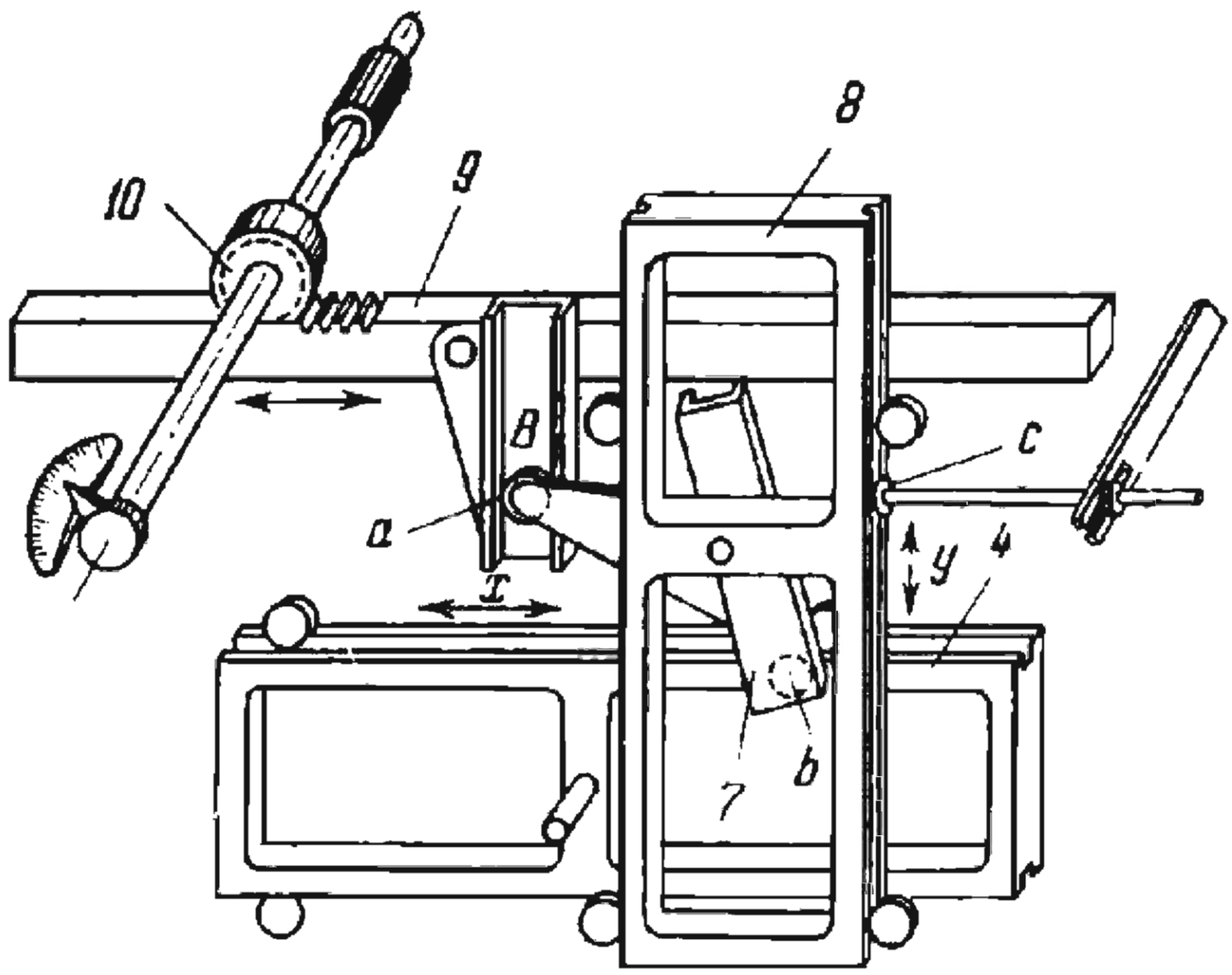

The mechanism can determine the product $x \times y$. A quantity proportional to y is marked off on slide *4* which travels horizontally in roller guides. Slide *4* carries pin *b* which slides along channel *7*. When slide *4* is displaced, channel *7* turns about point *B* of roller *a*, and slide *8* is displaced a distance proportional to quantity y. Quantity x is set up by means of pinion *10* and gear rack *9* so that slide *8* is displaced a distance proportional to quantity x. Thus, the resultant displacement of slide *8* is proportional to the product $x \times y$ and is transmitted by means of roller *c* to the actuating mechanism.

2489	SLOTTED-LEVER-GEAR RACK-TYPE RECTANGULAR COORDINATE MECHANISM	LrG MO

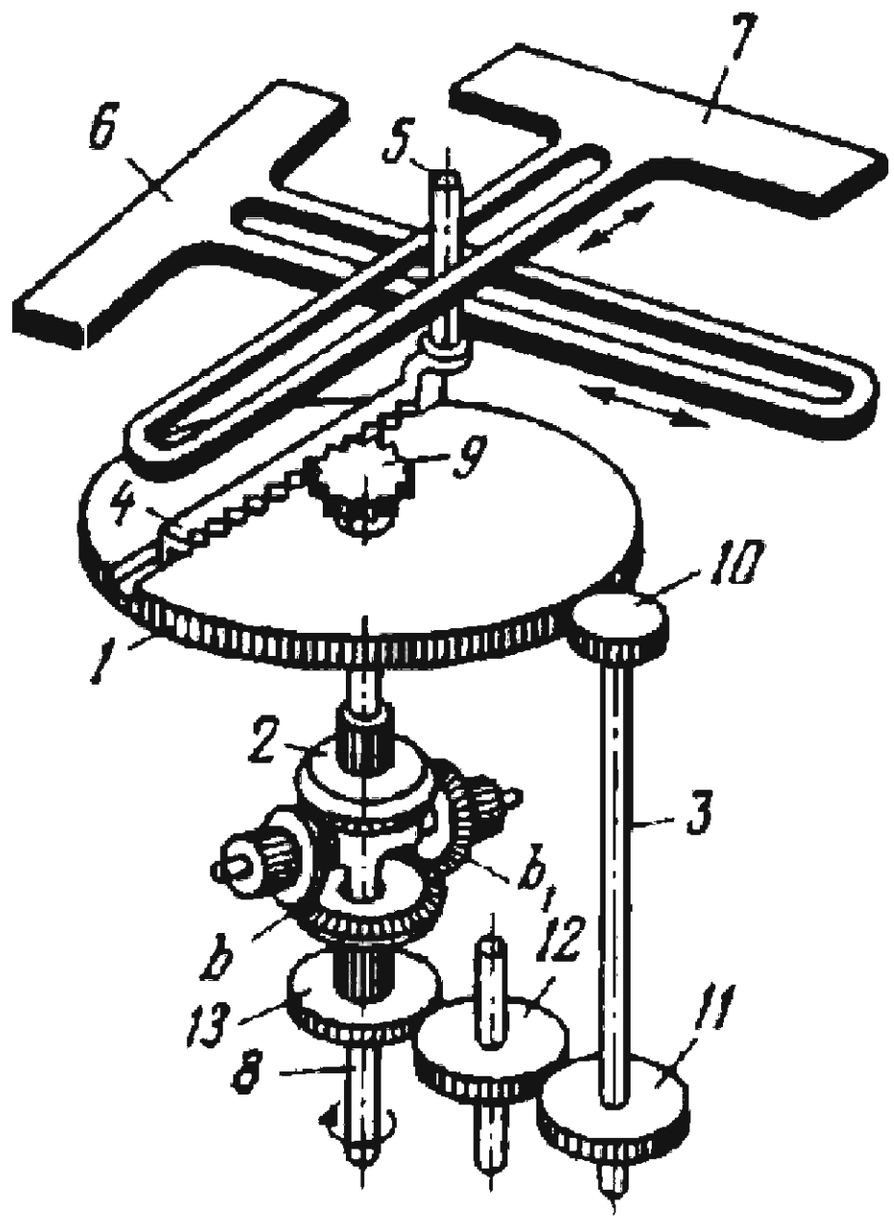

The mechanism is intended for resolving a vector along coordinate axes in the plane of action of the vector. The translational displacements of slides *6* and *7* are proportional to the components along the coordinate axes of a vector preset by the distance from the centre of pinion *9* to the axis of pin *5*, and by the angle of rotation of disk *1*. The setting is made with pin *5* located at the end of rack *4* which meshes with pinion *9*. The magnitude of the vector to be resolved is entered into the mechanism by means of shaft *8* which is rigidly attached to the carrier of planet bevel gears *b* and b_1. The angle of inclination of the vector to the coordinate axes is entered by turning disk *1* from shaft *3* through pinion *10* and the teeth on disk *1*. The rolling of rack *4* about pinion *9* distorts the magnitude of the vector. This is eliminated by the provision of gears *11* and *12*, and cluster spur and bevel gear *13* which rotate pinion *9* through planet gears *b* and b_1 and bevel gear *2*.

2490	SLOTTED-LEVER-GEAR SPIRAL-TYPE RECTANGULAR COORDINATE MECHANISM	LrG MO

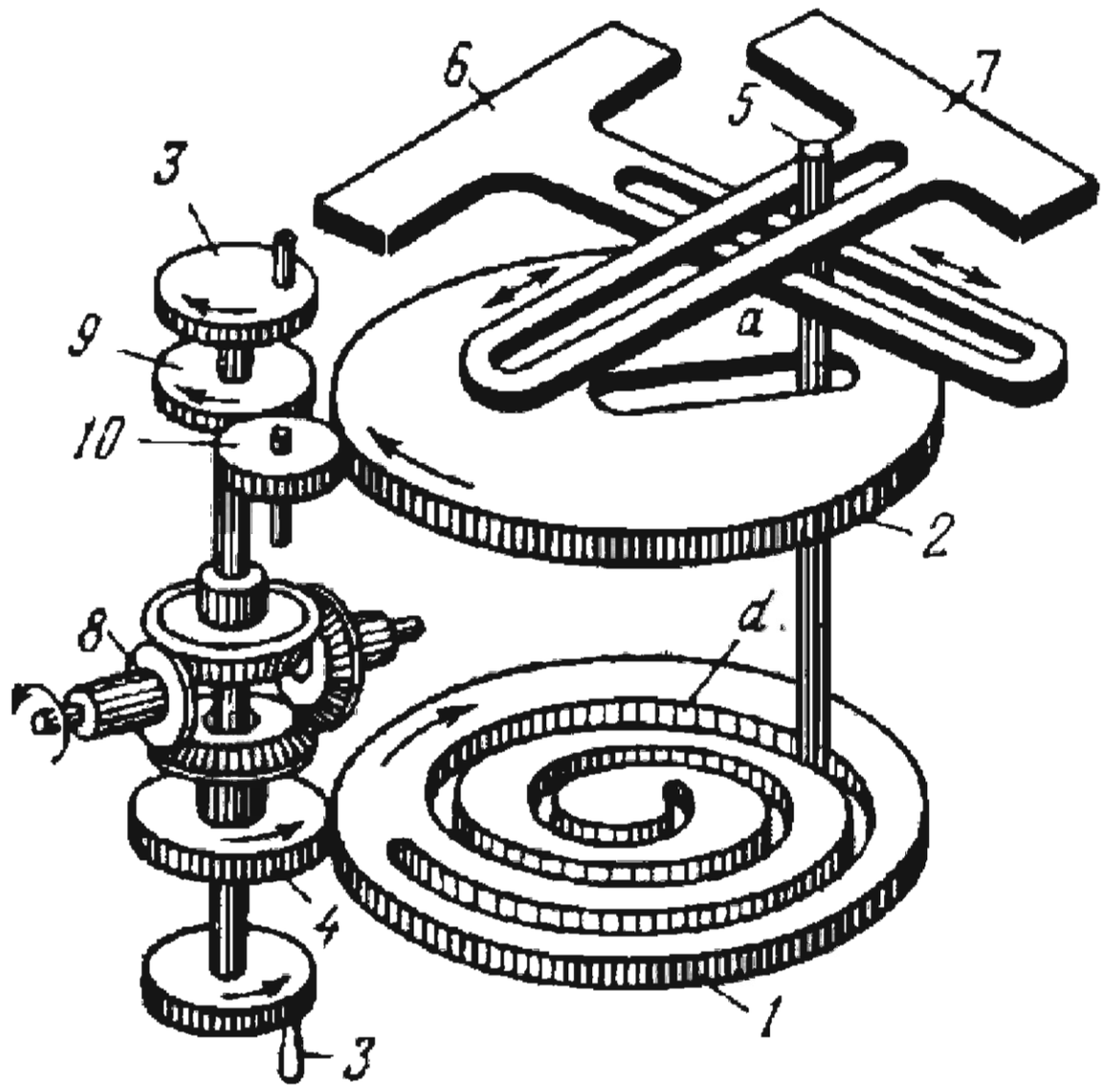

The mechanism is intended for resolving a vector along coordinate axes in the plane of action of the vector. The translational displacements of slides *6* and *7* are proportional to the components along the coordinate axes of a vector preset by the distance from the centre of disk *2* to the axis of pin *5*, and by the angle of rotation of disk *1*. The setting is made with pin *5* which slides along spiral slot *d* of disk *1* and along radial slot *a* of disk *2*. Slot *d* is in the shape of an Archimedean spiral. The magnitude and angle of inclination of the vector to be resolved are entered into the mechanism by means of gears *4* and *1*, planet bevel gear *8*, and gears *9* and *10*, which are turned by handwheels *3*.

2491	SLOTTED-LEVER-GEAR SCREW-TYPE RECTANGULAR COORDINATE MECHANISM	LrG MO

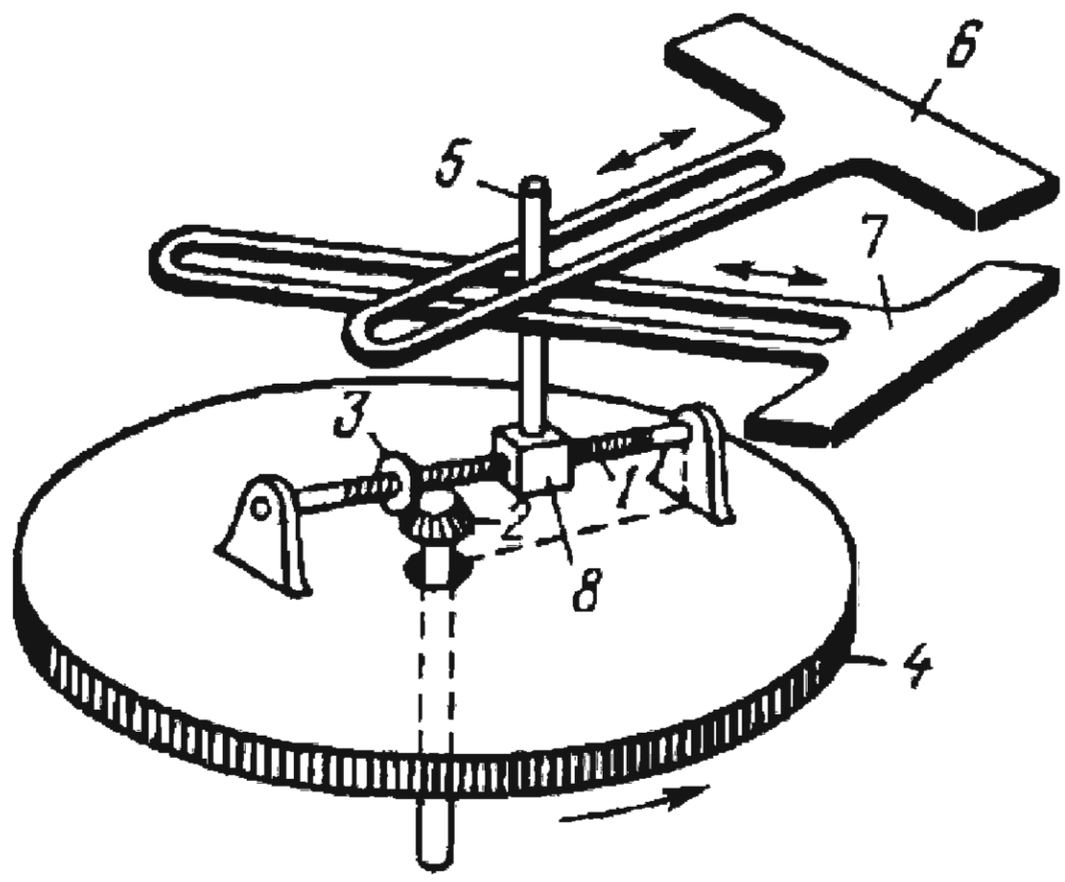

The mechanism is intended for resolving a vector along coordinate axes in the plane of action of the vector. The translational displacements of slides *6* and *7* are proportional to the components along the coordinate axes of a vector preset by the distance from the centre of gear *4* to the axis of pin *5*, and by the angle of rotation of disk *4*. The setting is made with pin *5* mounted on slider *8* which is connected by a screw pair to screw *1*. The magnitude and angle of inclination of the vector to be resolved are entered into the mechanism by bevel gears *2* and *3*, and a gear train (not shown) which turns gear *4*.

2492	LEVER-GEAR POLAR COORDINATE MECHANISM	LrG MO

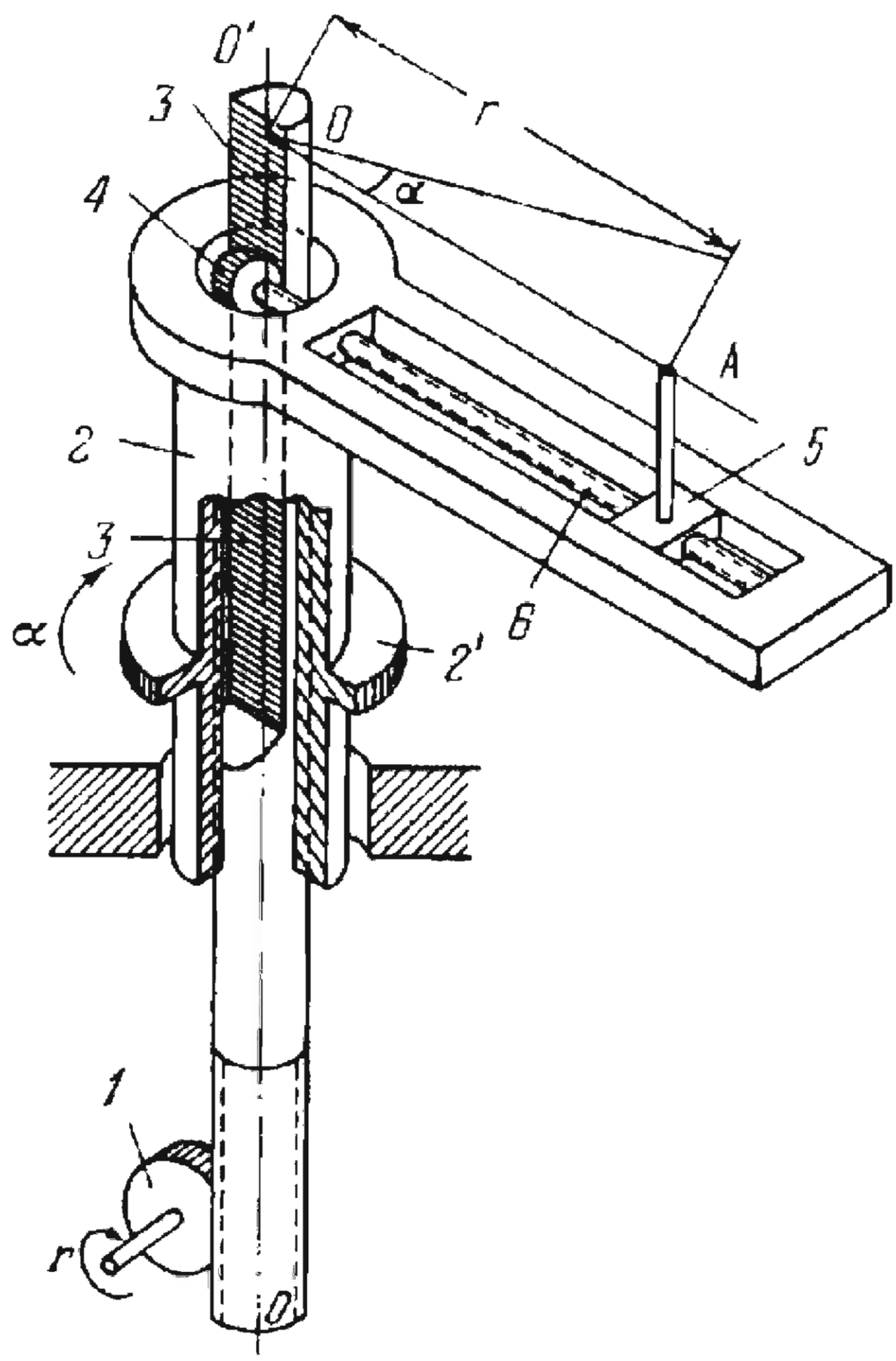

The magnitude of vector $\overrightarrow{OA}$ is set up by turning pinion *1*, and its direction by turning gear *2'* which belongs to link *2*. The rotation of pinion *1*, meshing with the annular gear rack of link *3*, is transmitted by spur rack *3* to pinion *4* which is rigidly attached to screw *6*. Nut *5* moves along screw *6* and thereby changes the distance $\overline{OA}$. When link *2* is turned, link *3* turns through the same angle without rotating gear *1* and screw *6*. This, therefore, does not change the magnitude of vector $\overrightarrow{OA}$.

2493	LEVER-GEAR SPATIAL COORDINATE MECHANISM	LrG IMO

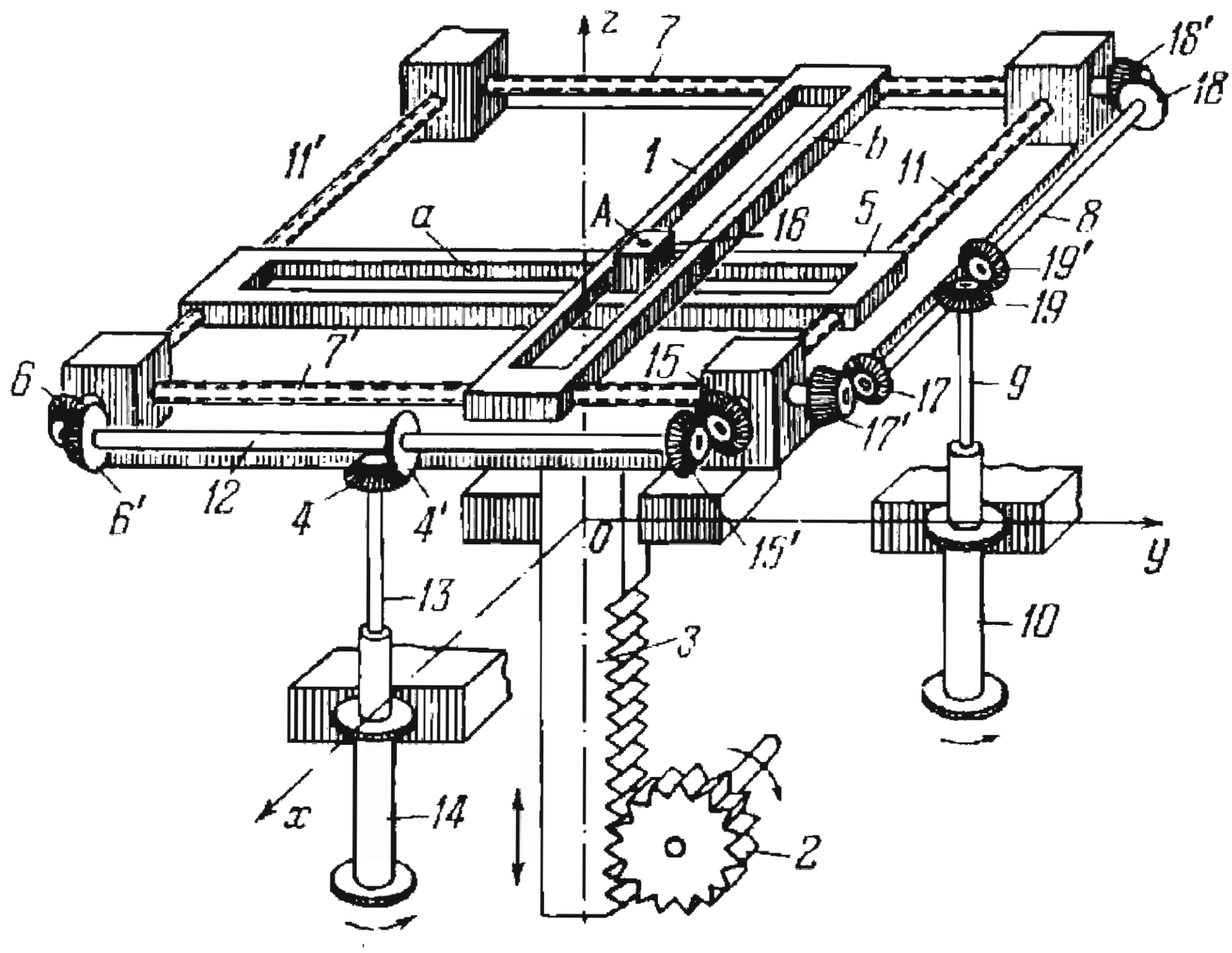

The mechanism is intended for determining vector $\overrightarrow{OA}$ from its components $(OA)_x$, $(OA)_y$ and $(OA)_z$ on the Ox, Oy and Oz axes. Projection $(OA)_x$ is entered into the mechanism by shaft *14* through intermediate shaft *13*, and bevel gear *4* (keyed on shaft *13*) which meshes with identical bevel gear *4'*. Gear *4'* is keyed on shaft *12* as are bevel gears *6'* and *15'* which mesh with bevel gears *6* and *15* keyed on lead screws *11'* and *11*. Lead screws *11'* and *11* are connected by screw pairs to slide *5*. When shaft *14* is turned, slide *5* travels parallel to axis Ox, thereby setting up projection $(OA)_x$. In a similar way, when shaft *10* is turned, motion is transmitted through intermediate shafts *9* and *8*, bevel gears *19*, *19'*, *17*, *17'*, *18* and *18'* and lead screws *7'* and *7* to slide *1* which thereby travels parallel to axis Oy. Slider *16* moves along slots *a* and *b* of slides *5* and *1*. Projection $(OA)_z$ is set up by turning pinion *2* which meshes with gear rack *3*. Rack *3* carries the whole system of links that sets up projections $(OA)_x$ and $(OA)_y$. To enable bevel gears *4* and *19* to travel along axis Oz, shafts *13* and *9* telescope inside hollow shafts *14* and *10*. The resultant vector is determined from the length and direction of line OA, where A is a point specified on slider *16*.

2494	LEVER-GEAR POLAR COORDINATE MECHANISM	LrG MO

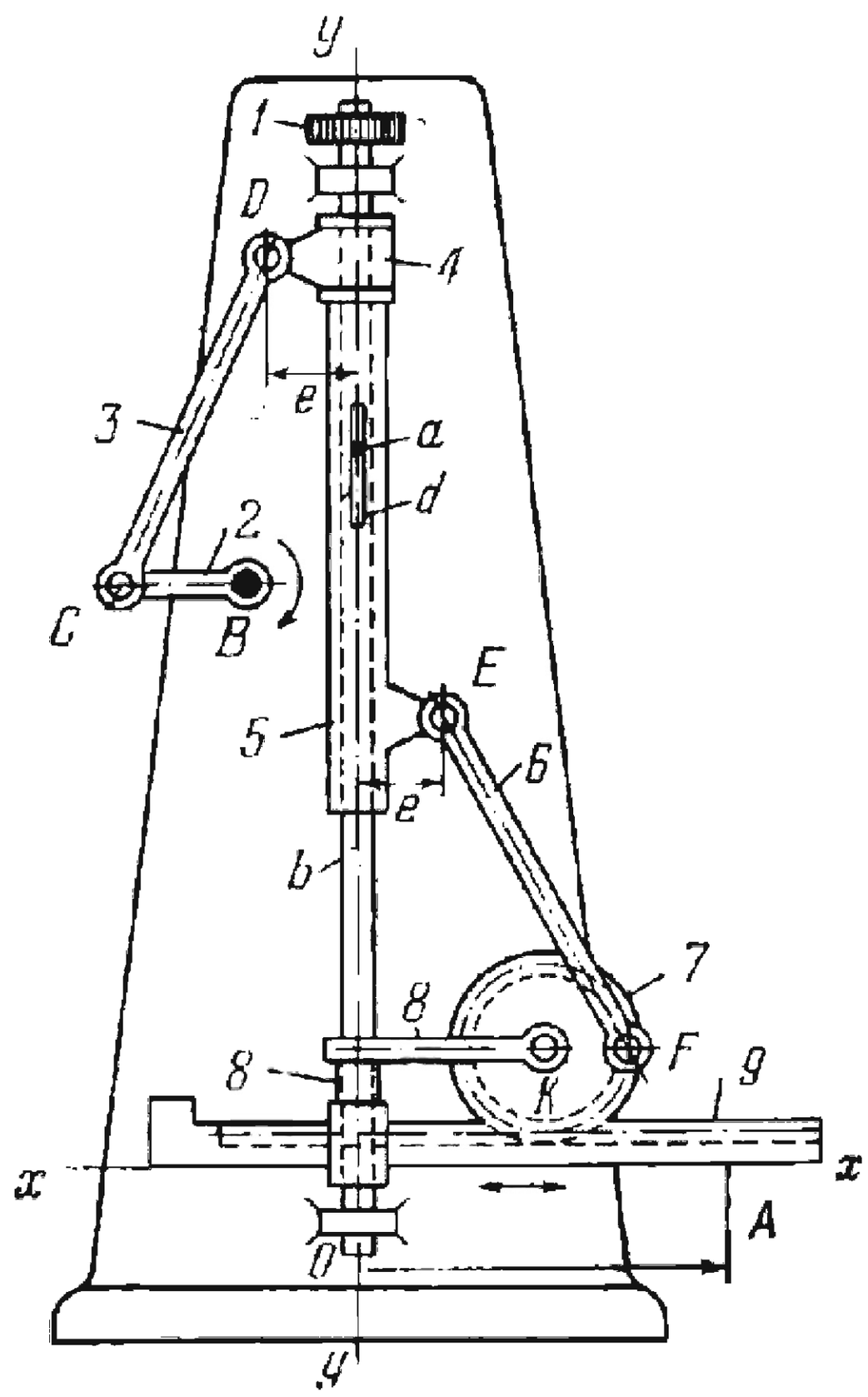

Crank *2* rotates about fixed axis *B* and is connected by turning pair *C* to connecting rod *3* which, in turn, is connected by turning pair *D* to slider *4*. Slider *4* moves on shaft *b* along axis *y-y*. Shaft *b* has pin *a* which slides along slot *d* of tube *5*. Tube *5* is connected by turning pair *E* to connecting rod *6* which, in turn, is connected by turning pair *F* to gear *7*. Gear *7* rotates about axis *K* and meshes with gear rack *9*. The lengths of the links comply with the conditions: $\overline{BC} = \overline{KF}$ and $\overline{CD} = \overline{FE}$. Besides, in the initial position of the mechanism, crank *2* and gear *7* are positioned as shown. When crank *2* is turned, gear *7* turns through an equal angle and rack *9* is displaced along axis *x-x*, thereby setting up the magnitude of vector $\overrightarrow{OA}$. When gear *1* is turned, shaft *b* turns and its pin *a* turns tube *5*, together with link *6*, gear *7*, link *8* and rack *9*, about axis *y-y*, thereby setting up the direction of vector $\overrightarrow{OA}$.

2495	LEVER-GEAR EXTERNAL PLANETARY MECHANISM OF A PLANIMETER	LrG MO

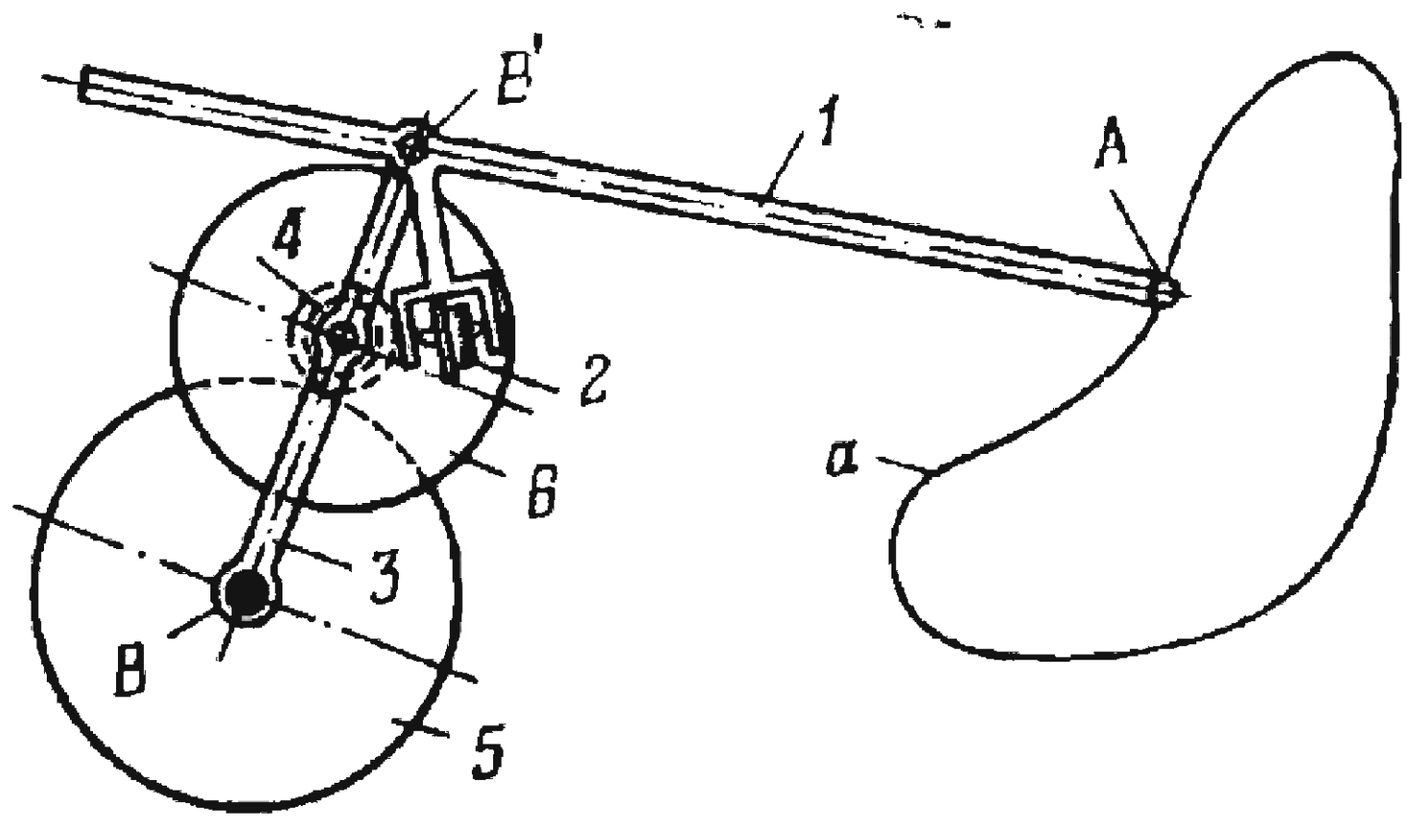

When tracing point *A* is moved around figure *a*, lever *1* turns about fixed axis *B* and recording wheel *2* remains stationary. If lever *1* has translational motion, arm *3* turns about axis *B'* and planet gear *4* rolls with disk *6* about fixed sun gear *5*. As a result, recording wheel *2* begins to turn, and registers the area of the figure *a*.

2496	LEVER-GEAR INTERNAL PLANETARY MECHANISM OF A PLANIMETER	LrG MO

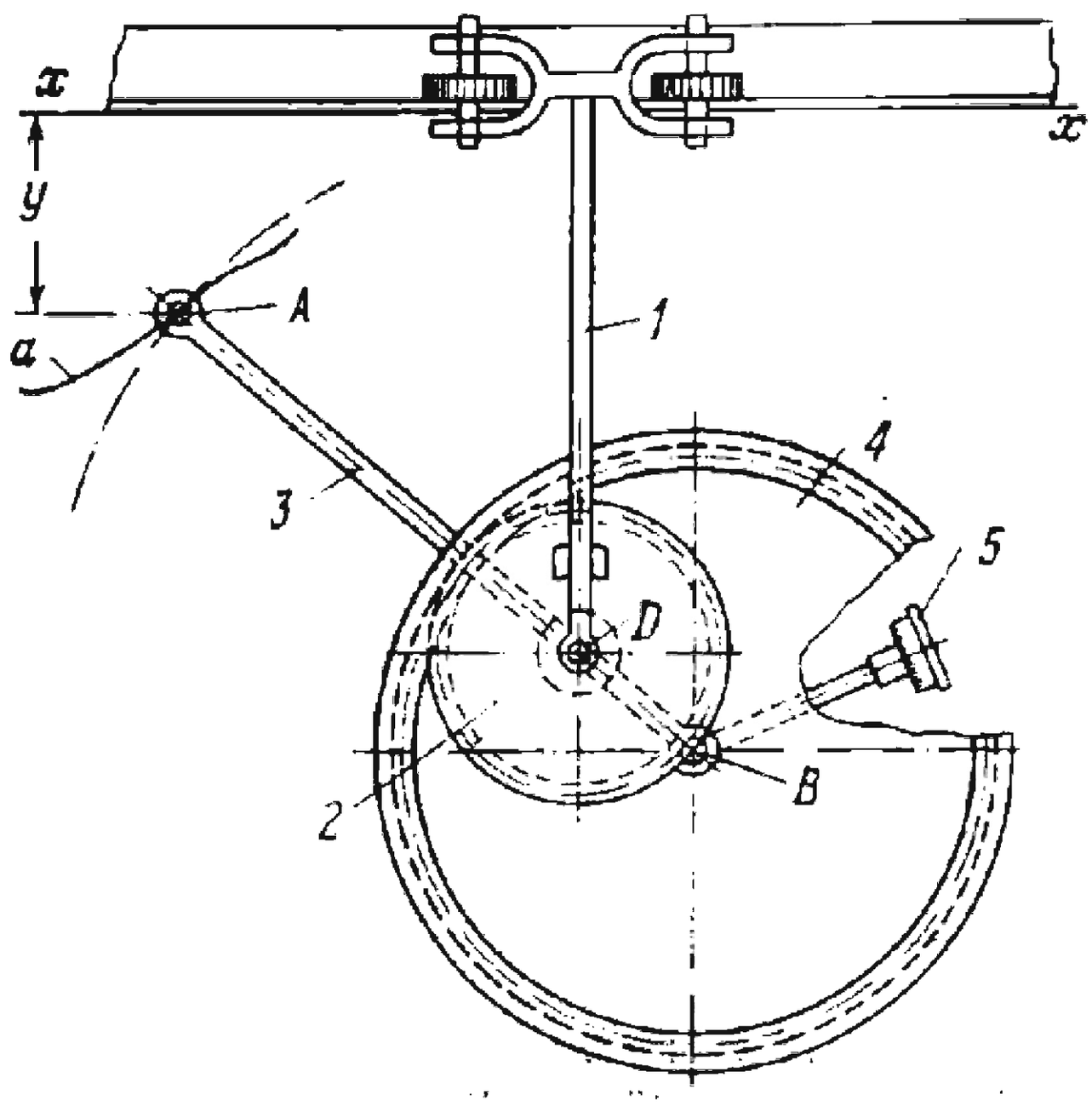

When tracing point *A* is moved along curve *a*, carriage *1*, rigidly attached to gear *2*, has translational motion along axis *x-x*. Tracing arm *3* is connected by turning pair *D* to carriage *1* and serves as a carrier for internal gear *4* which turns about axis *B*. Gear *4* meshes with gear *2* and is rigidly attached to the axis of recording wheel *5* which is rotated when gear *4* rotates. The rotation of wheel *5* is proportional to the required integral, i.e.

$$\varphi = c \int_{x_1}^{x_2} \sqrt{y}\, dx$$

where c is a constant.

2497	LEVER-GEAR EXTERNAL PLANETARY MECHANISM OF A PLANIMETER	LrG MO

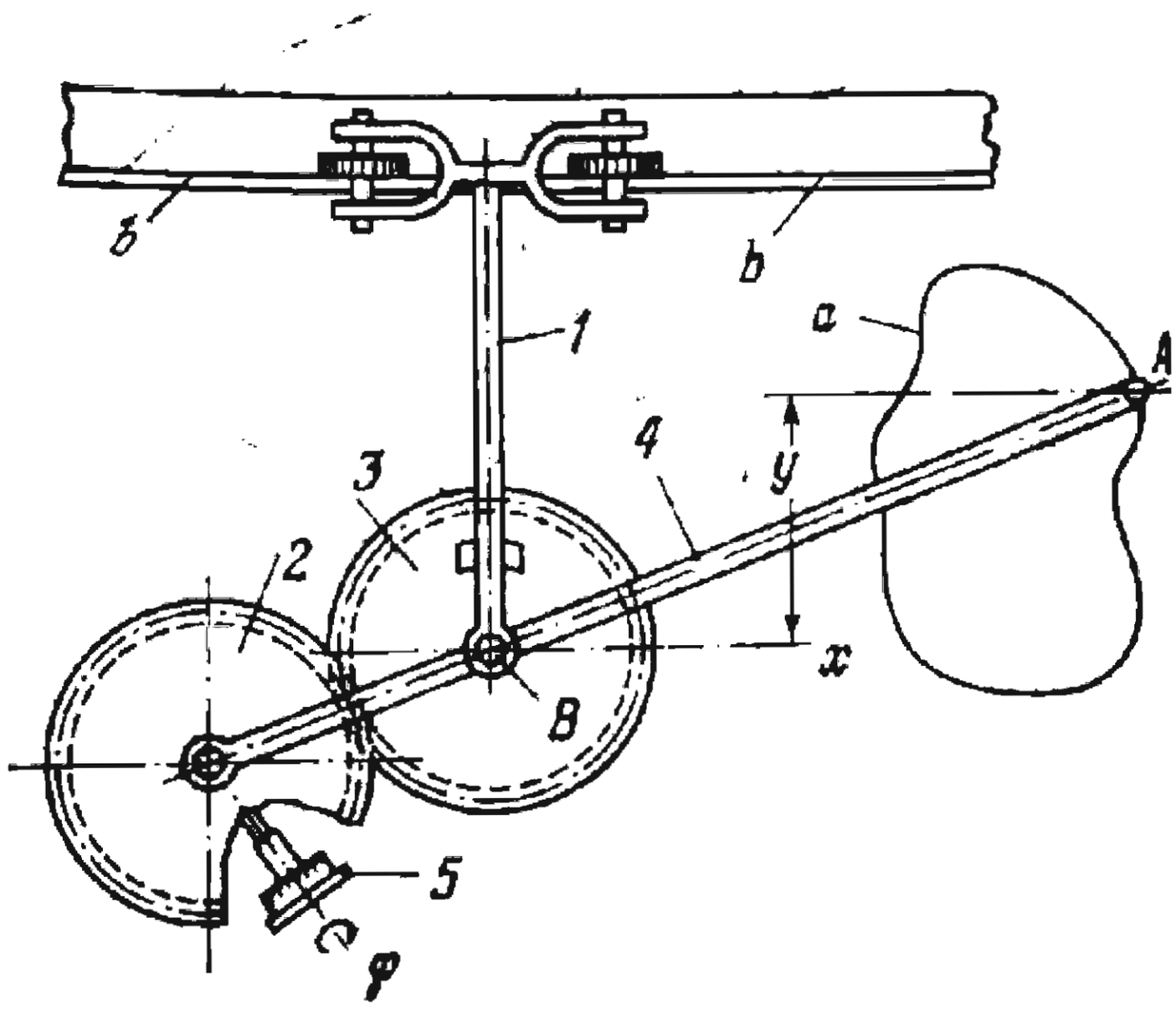

When tracing point A is moved along curve a, carriage 1, rigidly attached to sun gear 3, travels along straight guides b-b, and planet gear 2 rolls around gear 3. Gear 2 is connected by a turning pair to link 4 which, in turn, is connected by turning pair B to carriage 1. Recording wheel 5, whose axis is rigidly attached to gear 2, rotates an amount proportional to the required integral

$$\varphi = c \oint y^2 dx, \text{ where } c \text{ is a constant.}$$

2498	LEVER-GEAR EXTERNAL PLANETARY MECHANISM OF A PLANIMETER	LrG MO

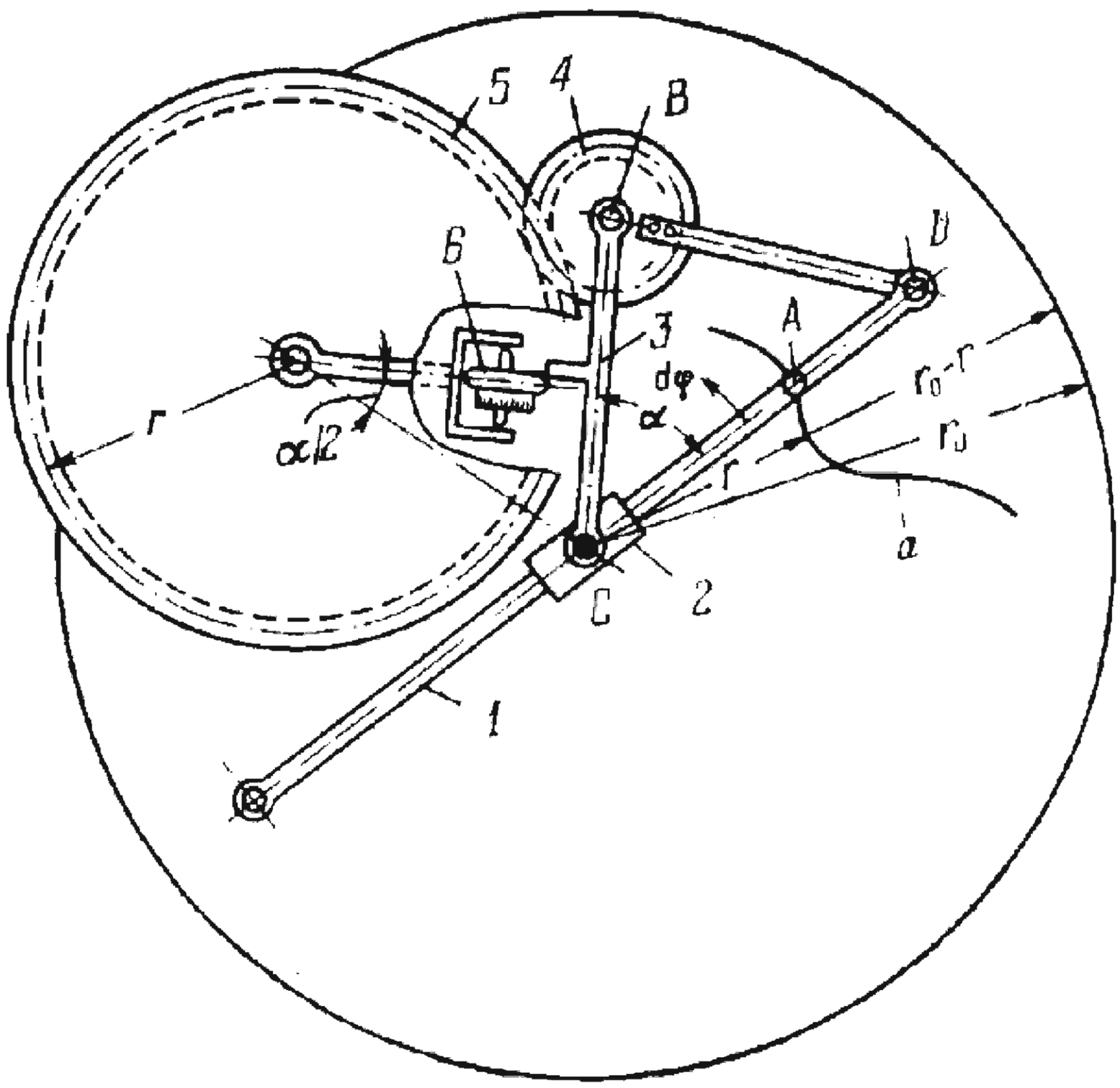

When tracing point A is moved along curve a, sliding link 1 moves in sleeve 2. This turns link 3 about axis C and gear 4 turns about axis B, thereby turning gear 5. The angle of rotation of recording wheel 6 is proportional to the quantity $\int \sqrt{r_0 - r}\, d\varphi$, where r_0 is the radius of the largest circle that can be described by point A.

LEVER-GEAR MECHANISM OF A HARMONIC ANALYZER

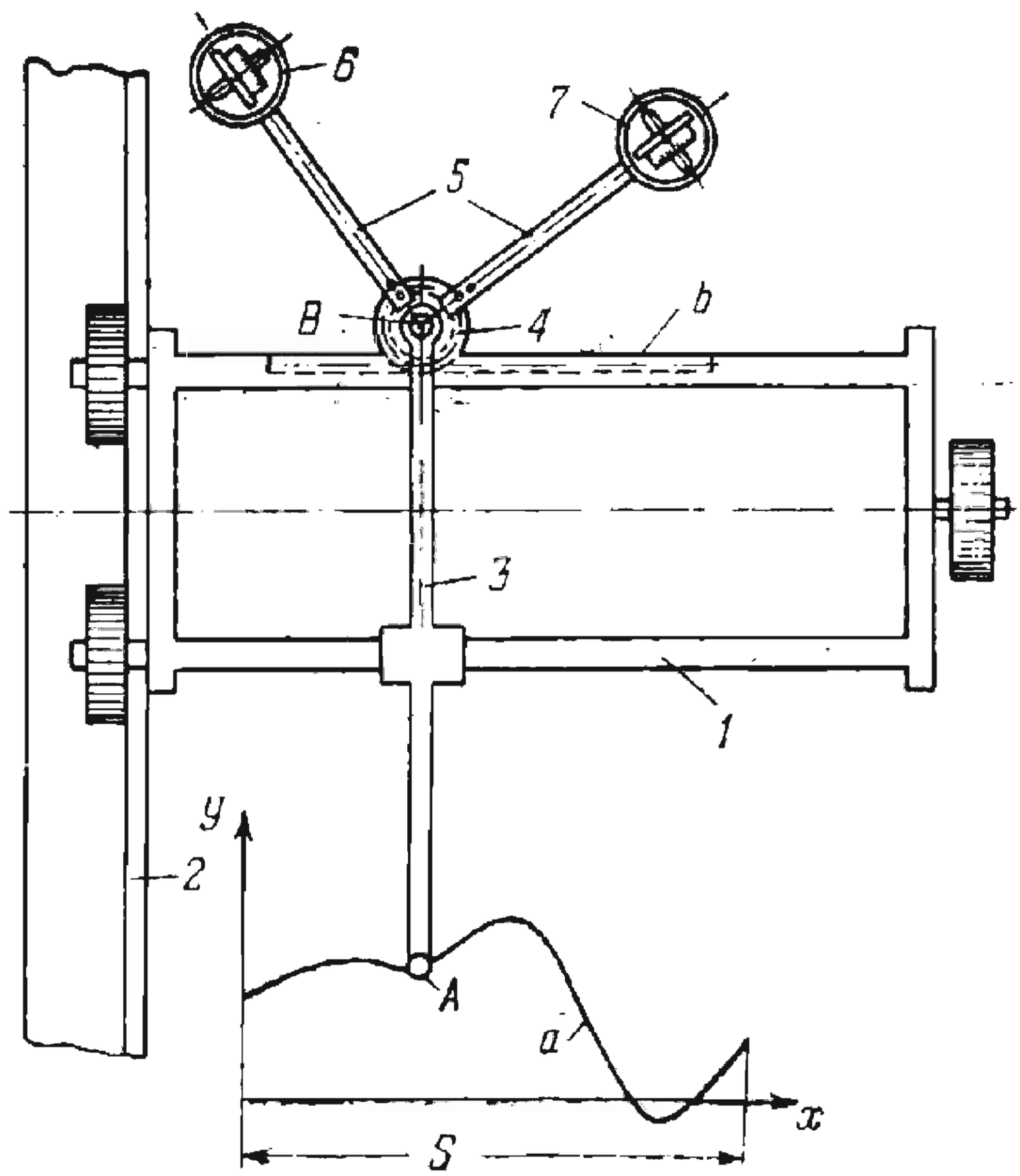

When tracing point A is moved along curve a, carriage 1 travels along guide 2 parallel to axis y and slide 3 travels along guides of carriage 1 parallel to axis x. Pinion 4 is connected by turning pair B to slide 3 and meshes with gear rack b of carriage 1. Two-armed lever 5 carries recording wheels 6 and 7 and is rigidly attached to pinion 4. The motion of point A is resolved into two motions: along the x and y axes. The angles of rotation of wheels 6 and 7 are proportional to coefficients a_k and b_k of a harmonic series. Each pair of coefficients corresponds to a definite pitch radius of pinion 4:

$$a_k = -\frac{1}{k\pi}\int^{s} \sin\varphi\, dy$$

$$b_k = \frac{1}{k\pi}\int^{s} \cos\varphi\, dy.$$

2500	LEVER-GEAR MECHANISM OF A PLANIMETER	LrG MO

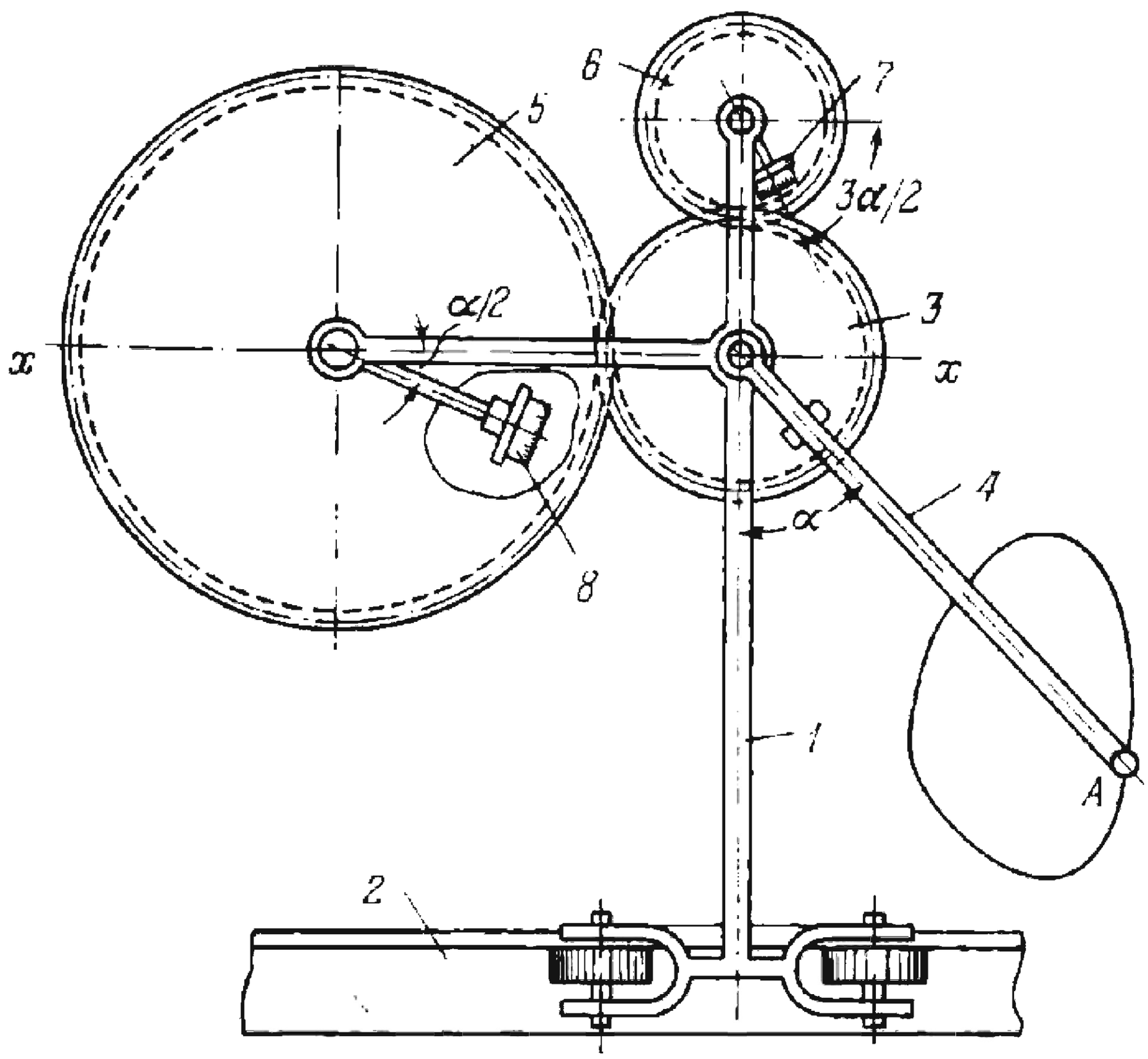

When tracing point A is moved along closed curve $y = f(x)$, carriage *1* travels along guide *2* parallel to axis x-x, and gear *3*, rigidly attached to lever *4*, turns through a certain angle Through gears *5* and *6* with which it meshes, gear *3* turns recording wheels *8* and *7* whose axes are rigidly attached to gears *5* and *6*. The mechanism can solve integrals of the form

$$\oint y^{3/2}\,dx = l^{3/2}\,\frac{1}{\sqrt{2}}\left(-\oint \sin\frac{3\alpha}{2}\,dx + 3\oint \sin\frac{\alpha}{2}\,dx\right)$$

where l is the distance between axis x-x and guide *2*. The reading of wheel *7* is the value of the first integral, and that of wheel *8* the value of the second.

2501	SLOTTED-LEVER-GEAR MECHANISM OF A HARMONIC ANALYZER	LrG MO

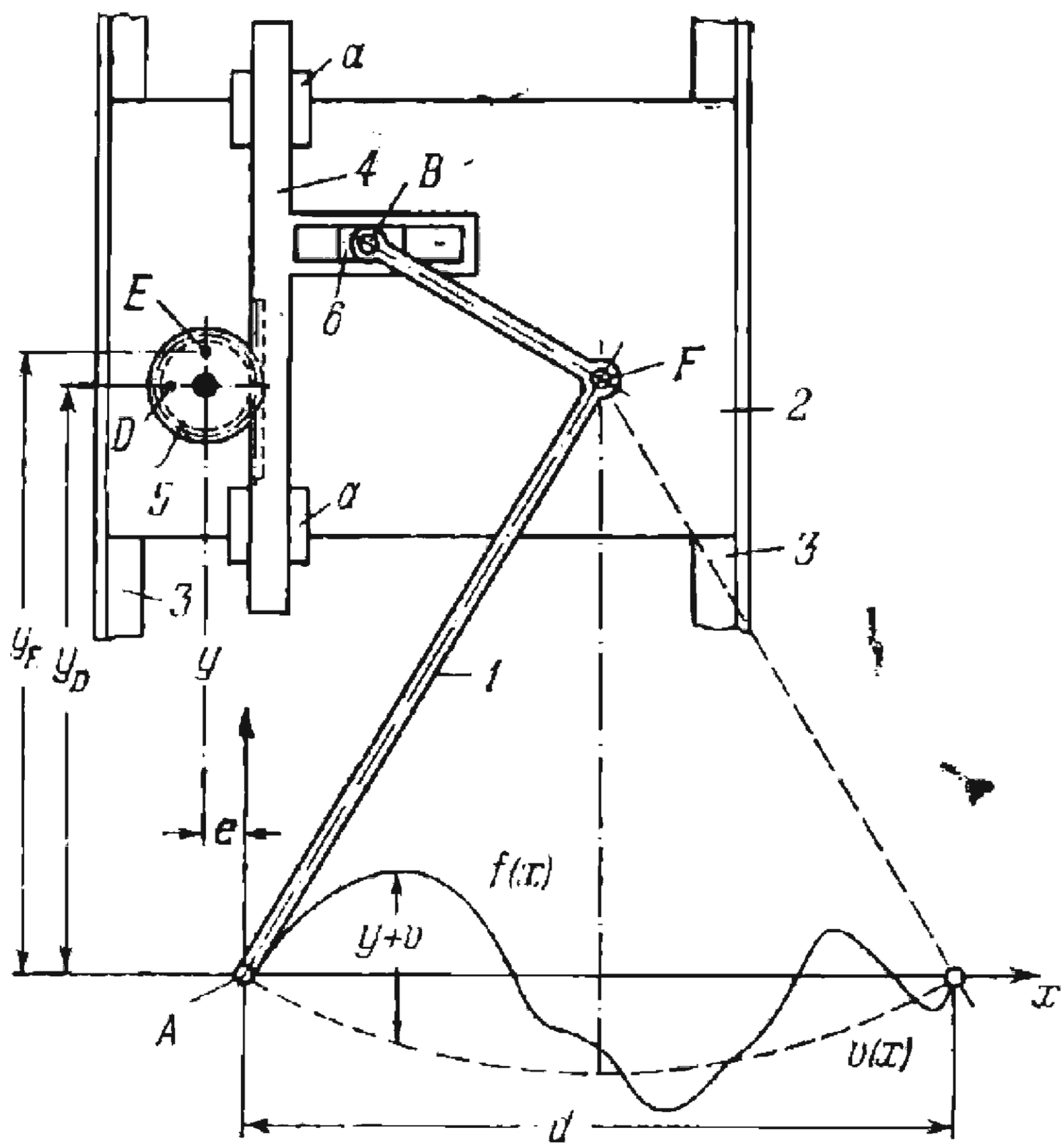

When tracing point A is moved along curve $y=f(x)$, lever *1* is turned about point F by which it is pivoted to slide *2*. This moves slide *2* along guides *3* parallel to axis *4*. Simultaneously, lever *1*, through turning pair B and slider *6*, moves gear rack *4* along guides *a-a* which belong to slide *2*. Gear rack *4* rotates gear *5*. The coordinates of points E and D of gear *5* satisfy the equations:

$$x_E=-e+r\sin\beta \text{ and } y_E=f(x)+v(x)+r\cos\beta$$

$$x_D=-e-r\cos\beta \text{ and } y_D=f(x)+v(x)+r\sin\beta.$$

Points E and D describe curves on a fixed plane. The area of the curve described by point E is expressed by the integral

$$I_E=\int_0^d y_E\,dx_E+\int_d^0 y_E\,dx_E=r\int_0^d f(x)\,d\left[\sin\left(n\frac{2\pi}{d}x\right)\right]=ka_n.$$

The area of the curve described by point D is expressed by the integral:

$$I_D=r\int_0^d f(x)\,d\left[\cos\left(n\frac{2\pi}{d}x\right)\right]=kb_n$$

where r is the distance from the centre of gear *5* to points D and E.

2502	SLOTTED-LEVER-GEAR MECHANISM OF A RADIAL INTEGRIMETER	LrG MO

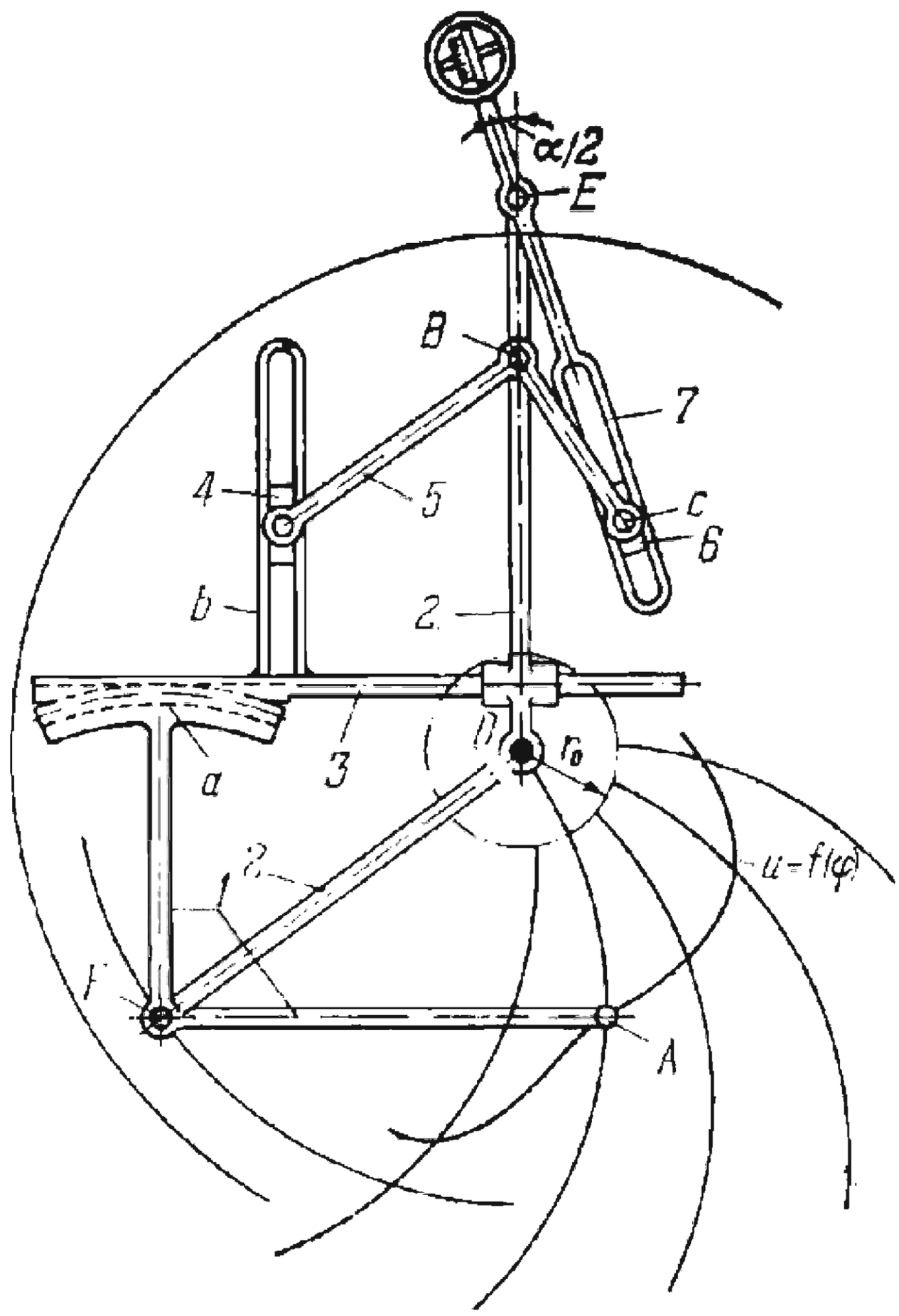

When tracing point *A* is moved along curve *f* (φ), link *1* with gear segment *a* turns about axis *F* of link *2*. Segment *a* meshes with and moves rack *3* which carries slotted member *b*. Slider *4* moves along the slot of member *b* and is pivoted to bent lever *5* which turns about axis *B* of link *2*. Link *5* has pin *c* pivoted to slider *6* which moves along the slot of slotted lever *7*, turning it about axis *E* of link *2*. At the same time, links *1* and *2* and rack *3* turn about pole *O*. The number of revolutions of the recording wheel, carried on lever *7*, is proportional to the integral

$$u = c \int \sqrt{r - r_0}\, d\varphi$$

where *c* is the proportionality factor, and φ is the angle of rotation of rack *3*.

2503	SLOTTED-LEVER-GEAR MECHANISM OF A RADIAL INTEGRIMETER	LrG MO

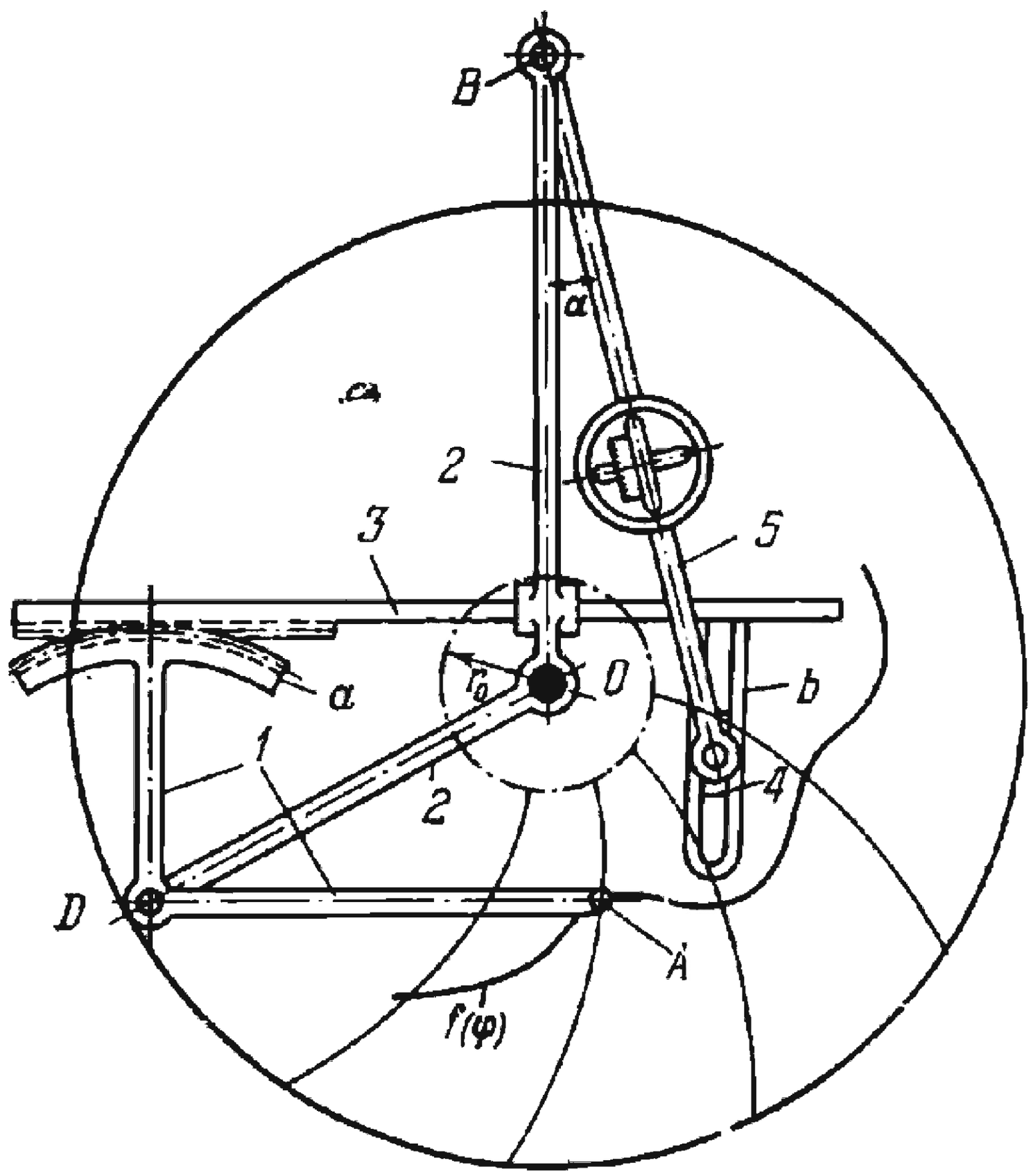

When tracing point A is moved along curve $f(\varphi)$, link *1* with gear segment *a* turns about axis D of link *2*. Segment *a* meshes with and moves rack *3* which carries slotted member *b*. Slider *4* moves along the slot of member *b* and is pivoted to lever *5* which turns about axis B of link *2*. At the same time, links *1* and *2* and rack *3* are turned about pole O. The number of revolutions of the recording wheel, carried on lever *5*, is proportional to the integral

$$u = c \int (r - r_0)\, d\varphi$$

where c is the proportionality factor, and φ is the angle of rotation of rack *3*.

2504	LEVER-GEAR ADDING MECHANISM WITH A ZEROING HAND	LrG MO

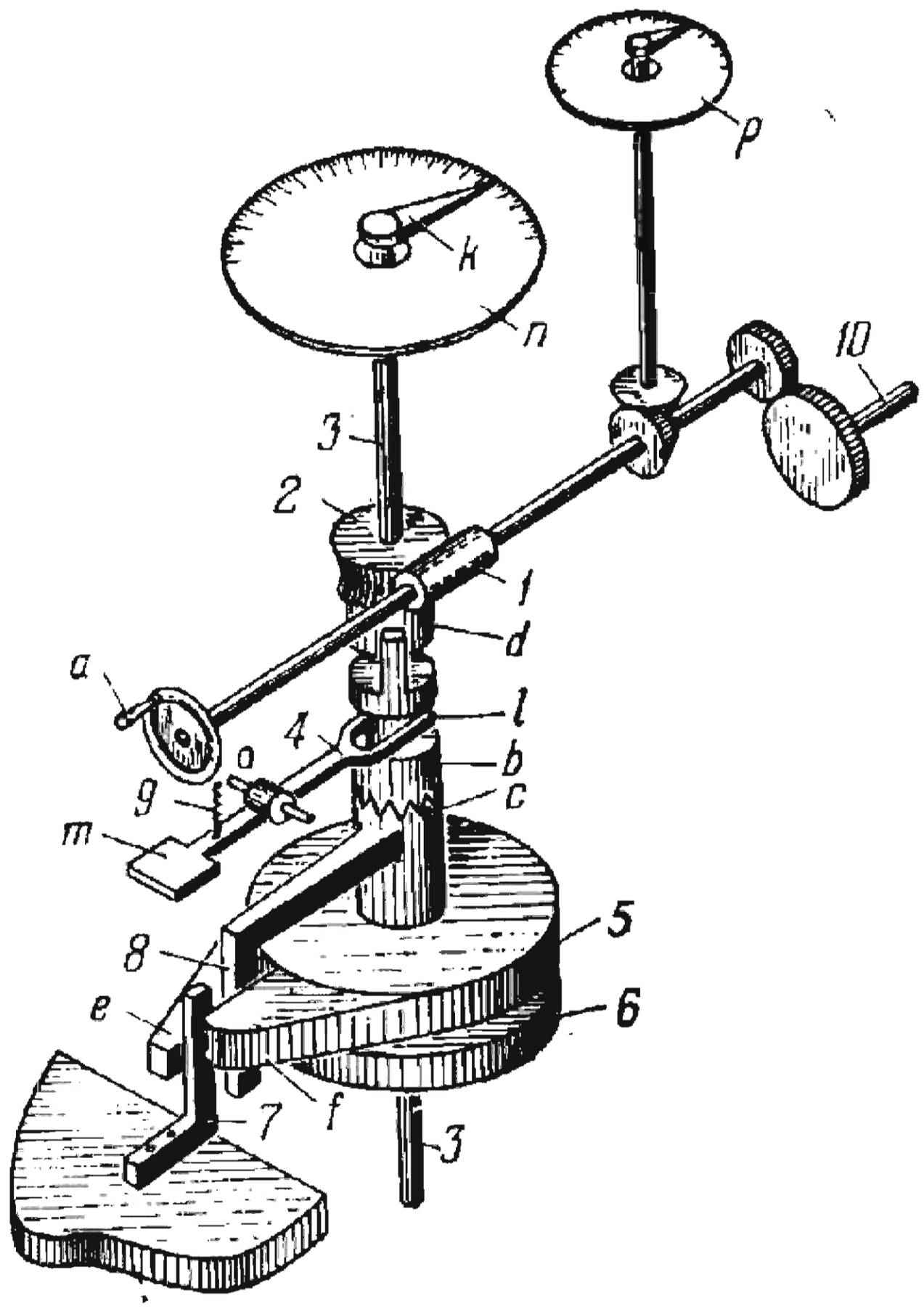

2504	LEVER-GEAR ADDING MECHANISM WITH A ZEROING HAND	LrG MO

One of the addends is entered by turning handwheel *a*. This rotates worm *1* which transmits rotation to wormwheel *2* mounted freely on shaft *3*. Rigidly attached to wormwheel *2* is clutch member *d*. The mating clutch member *b*, freely mounted on shaft *3*, engages clutch member *c* which is keyed on shaft *3*. Thus, rotation of wormwheel *2* is transmitted by the clutch members to shaft *3* which carries hand *k*. Hand *k* indicates the magnitude of the addend on dial scale *n*. When pedal *m* is depressed, fork end *l* of zeroing device *4*, turning about fixed axis *o*, disengages clutch members *b* and *c*. At this, shaft *3* with hand *k* is returned to its initial position (zeroed) by the action of a spring arranged between disks *5* and *6*, and by lugs *f* and *e*. Disks *5* and *6* turn freely on shaft *3* and are connected together by a spring which tends to turn the disks with respect to each other. Lugs *f* and *e* of disks *5* and *6* bear against fixed stop *7* and limit rotation of the disks. L-shaped lever *8* is rigidly attached to shaft *3* and its end is also between lugs *f* and *e* of disks *5* and *6*. By means of spring *9* fork end *l* holds clutch members *b* and *c* in engagement, enabling rotation to be transmitted from handwheel *a* to hand *k*. When shaft *3* is turned through a certain angle by rotating handwheel *a*, lever *8* overcomes the resistance of the spring between disks *5* and *6*, and turns either disk *5* or *6*, depending upon the direction of rotation of handwheel *a*. Then disk *5* or *6*, as the case may be, tends to return shaft *3* to its initial position. Unintentional rotation of shaft *3* with lever *8* beyond the limits of stop *7* is prevented by lug *f* or *e* of disk *5* or *6*, and by the worm gearing. The position of lever *8* opposite stop *7* corresponds to the zero position of hand *k* on dial scale *n*. The second, third and subsequent addends are entered in a similar way. Before entering each addend hand *k* is zeroed. Thus, the shaft of worm *1* is rotated through an angle which is the algebraic sum of the angles entered in by turning handweel *a*, and proportional to the sum of the addends. This sum is read off on dial scale *p*. By means of gearing *10*, this sum can be directly entered into the required mechanism.

2505	LEVER-GEAR MECHANISM OF AN INTEGRATOR	LrG MO

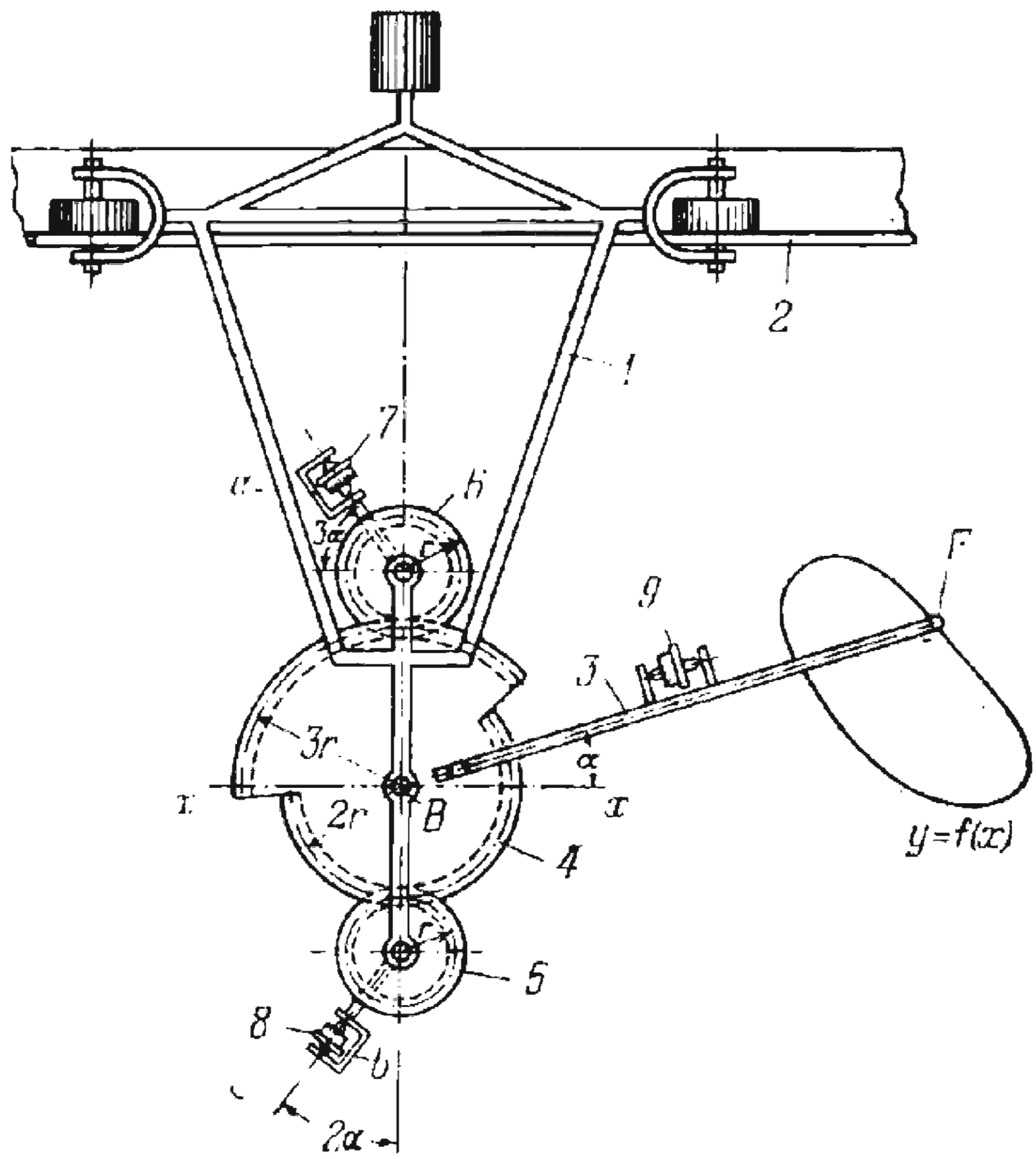

When tracing point F is moved along curve $y = f(x)$, carriage *1* travels along guide *2* parallel to axis x-x and gear *4*, rigidly attached to lever *3*, turns about axis B of carriage *1*. Gear *4* consists of two segments of pitch radii $2r$ and $3r$, where r is the pitch radius of gears *5* and *6*. Rotation of gear *4* is transmitted to gears *5* and *6* to which the frames *b* and *a* of recording wheels *8* and *7* are rigidly attached. Angle φ_9 of rotation of recording wheel *9*, whose frame is mounted on lever *3*, is proportional to the area A of the closed curve. Thus

$$\varphi_9 = k \int_{x_1}^{x_2} y\,dx = kA.$$

Angle φ_8 of rotation of wheel *8* is proportional to the static moment of area A with respect to axis x-x:

$$\varphi_8 = k \int_{x_1}^{x_2} \sin\left(\frac{\pi}{2} - 2\alpha\right) dx = k \int_{x_1}^{x_2} y^2\,dx.$$

Angle φ_7 of rotation of wheel *7* is proportional to the moment of inertia of area A with respect to axis x-x:

$$\varphi_7 = k \int_{x_1}^{x_2} \sin 3\alpha\,dx = k \int_{x_1}^{x_2} y^3\,dx.$$

2506	LEVER-GEAR MECHANISM OF A PLANIMETER	LrG MO

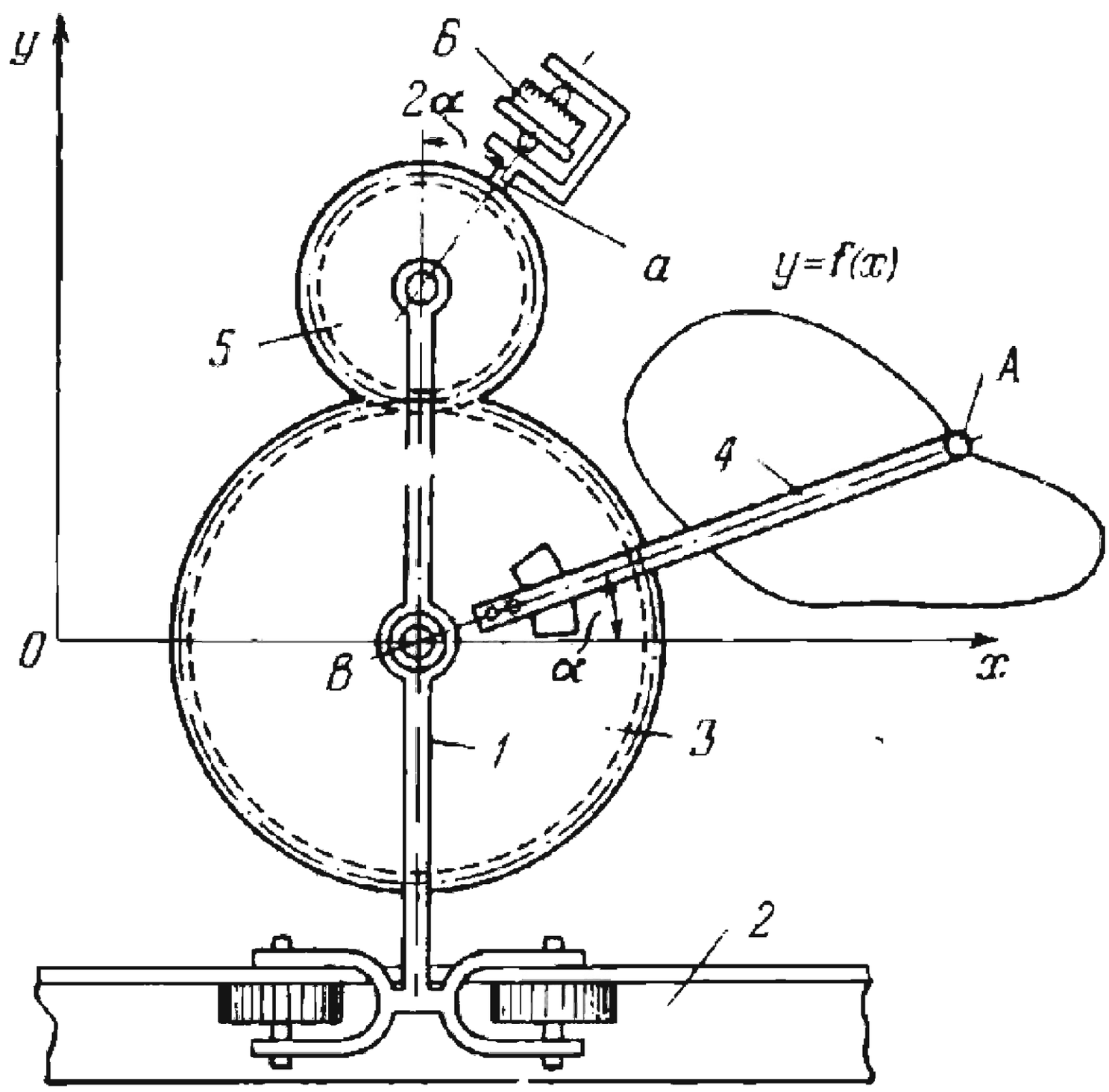

When tracing point A is moved along closed curve $y = f(x)$, carriage *1* travels along guide *2* parallel to axis Ox, and gear *3*, rigidly attached to lever *4* turns about axis B of carriage *1*. Gear *3* meshes with and turns gear *5* to which frame a of recording wheel *6* is rigidly attached. Recording wheel *6* indicates the magnitude of the static moment:

$$M_x = -\frac{1}{4} l \oint \cos 2\alpha \, dx$$

where l is distance $\overline{AB}$.

2507	RACK-GEAR MECHANISM WITH DWELL OF THE DRIVEN SLIDER	LrG D

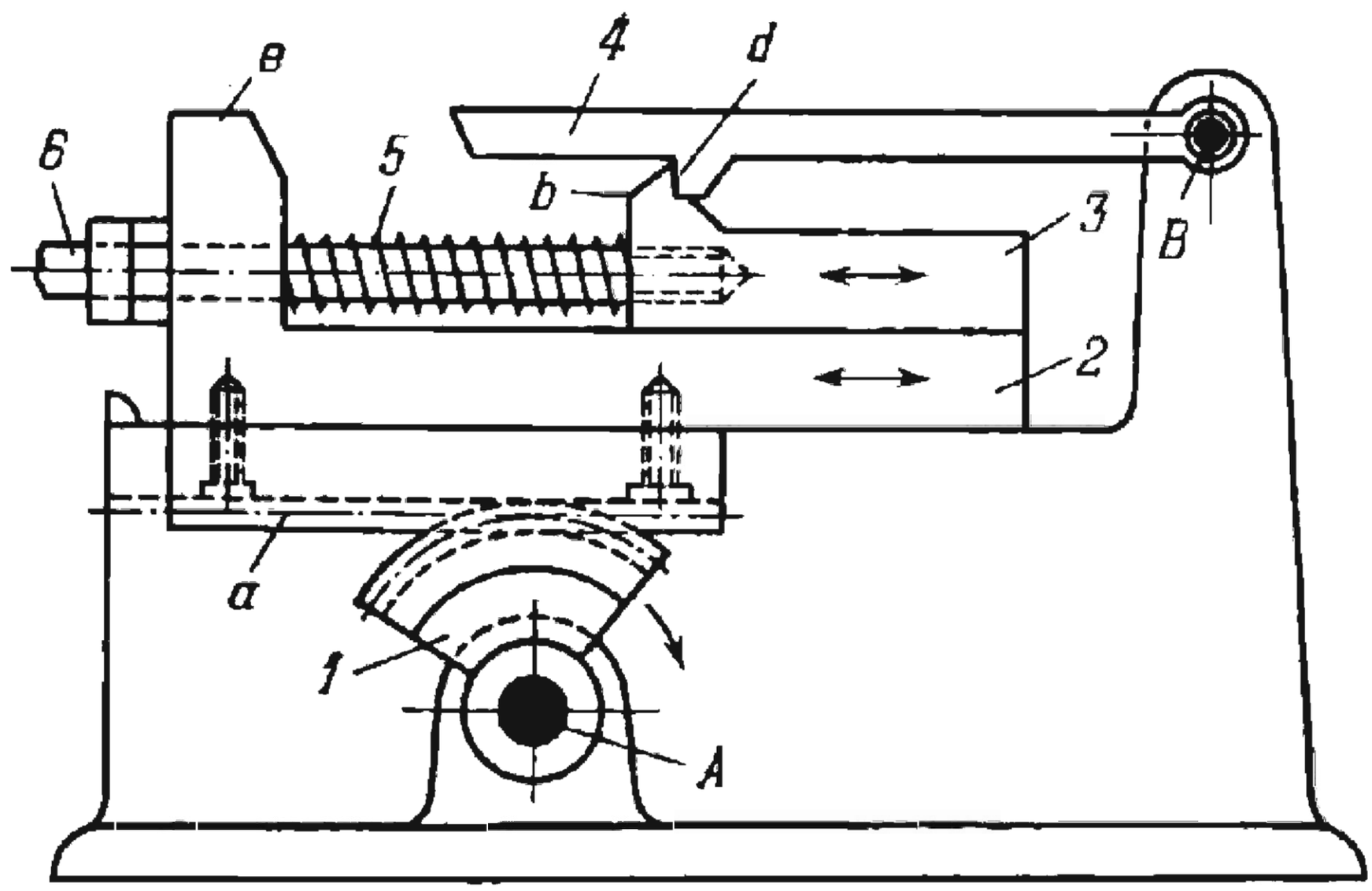

Segment gear *1* turns about fixed axis *A* and meshes with gear rack *a* belonging to slider *2*. Slider *3*, having rod *6*, moves along slider *2*. Spring *5* is mounted on rod *6* between slider *3* and lug *e* of slider *2*. Pawl *4* turns about fixed axis *B*. When segment gear *1* is turned clockwise, links *2* and *3* and spring *5* travel to the right as a unit with gear rack *a*. This motion continues until tooth *b* of link *3* runs against tooth *d* of pawl *4*. After this, rod *6* will have a dwell until lug *e* raises pawl *4*, releasing slider *3* which moves rapidly to the right due to the action of compressed spring *5*. Rod *6* is returned to its initial position by turning segment gear *1* counterclockwise.

2508	LEVER-GEAR MECHANISM WITH DWELLS OF THE DRIVEN SLIDER	LrG D

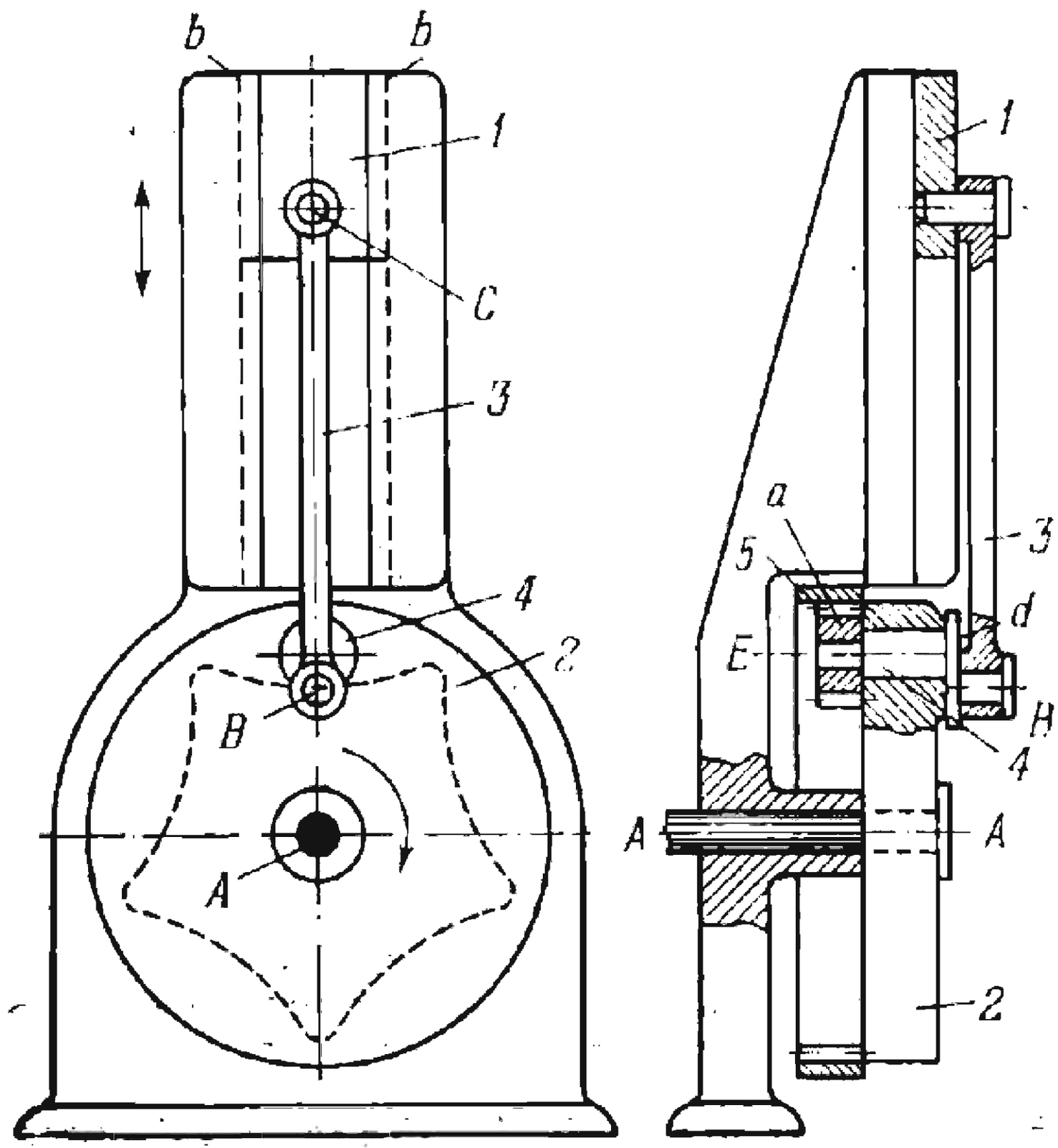

Disk 2 rotates about fixed axis *A-A* and is connected by turning pair *E* to link *4* which is designed as crank *d*. The crankpin of link *4* is connected by turning pair *B* to connecting rod *3* which, in turn, is connected by turning pair *C* to slider *1*. Slider *1* travels along fixed guides *b-b*. Pinion *a* is rigidly attached to link *4* and meshes with fixed internal gear *5*, in which it rolls. When disk *2* rotates, pinion *a* rolls around in gear *5* and thereby imparts supplementary rotation to crank *d* about axis *E* of link *4*. If the dimensions of pinion *a* and gear *5* are properly chosen, axis *B* of crank *d* describes the path shown by the dash line. Reciprocating motion with dwells is imparted to slider *1*. As shown, slider *1* has a dwell in its extreme upper position.

2509	LEVER-GEAR MECHANISM WITH TWO DWELLS OF THE DRIVEN LINK	LrG D

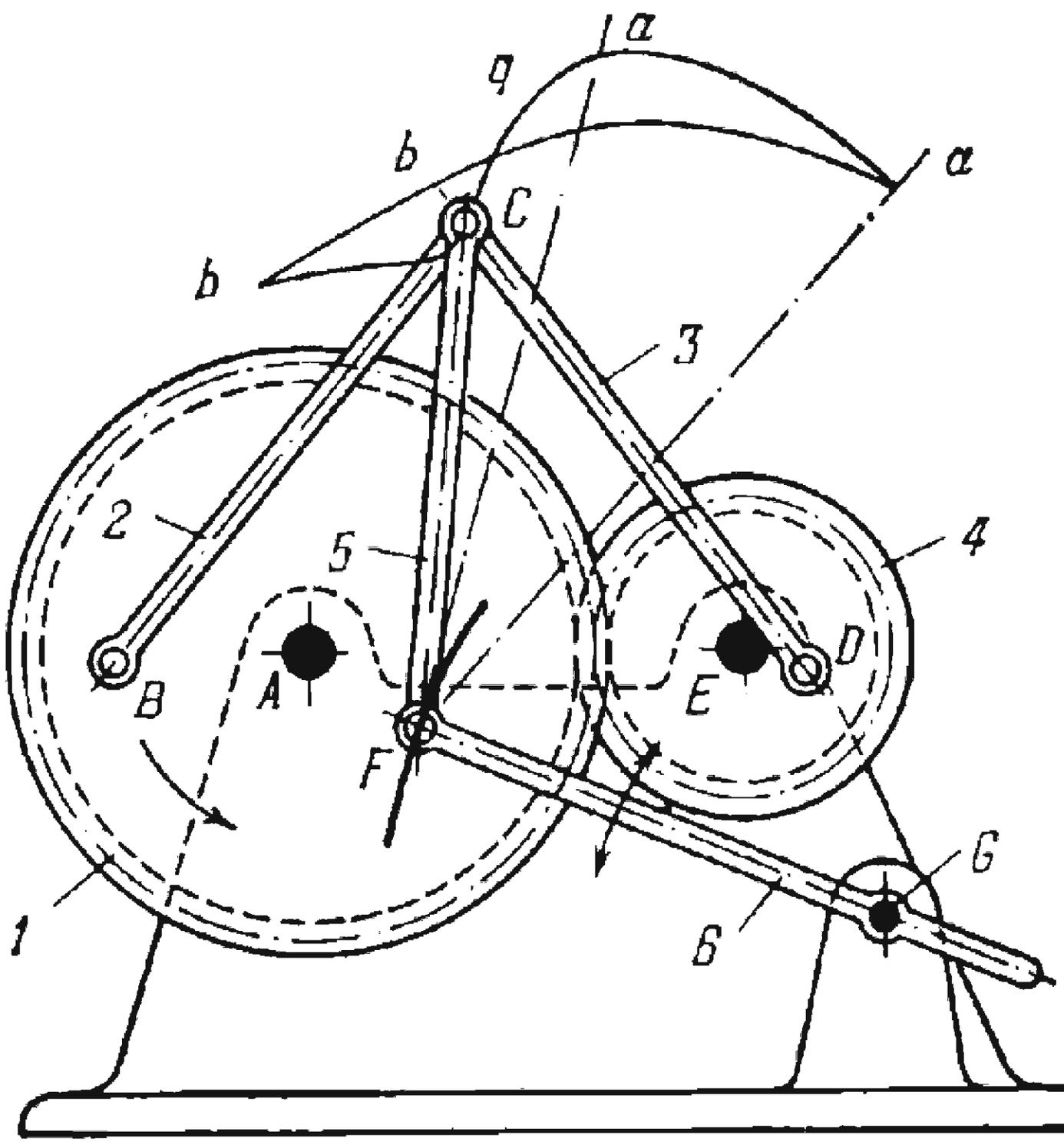

Gear *1* rotates about fixed axis *A* and meshes with gear *4* which rotates about fixed axis *E*. Gear *1* is connected by turning pair *B* to link *2* which, in turn, is connected by turning pairs *C* to links *3* and *5*. Link *3* is connected by turning pair *D* to gear *4*, and link *5* is connected by turning pair *F* to link *6* which turns about fixed axis *G*. The dimensions of the links comply with the conditions: $\overline{AB} = r$, $\overline{BC} = \overline{CD} = 2.9r$, $\overline{CF} = 2.6r$, $\overline{DE} = 0.3r$, $\overline{FG} = 2.5r$, $\overline{AE} = 2.2r$, $\overline{AG} = 3.2r$, $\overline{EG} = 1.5r$, $r_1 = 1.5r$ and $r_4 = 0.75r$, where r_1 and r_4 are the pitch radii of gears *1* and *4*. When driving gear *1* rotates, point *C* describes complex connecting-rod curve *q* whose portions *a-a* and *b-b* approximately coincide with circular arcs of radius $\overline{CF} = 2.6r$ described from the corresponding positions of point *F*. In each full cycle of motion, driven link *6* has two long dwells during the time that point *C* passes over portions *a-a* and *b-b* of its path.

2510	LEVER-GEAR MECHANISM WITH A DWELL OF THE DRIVEN SLIDER	LrG D

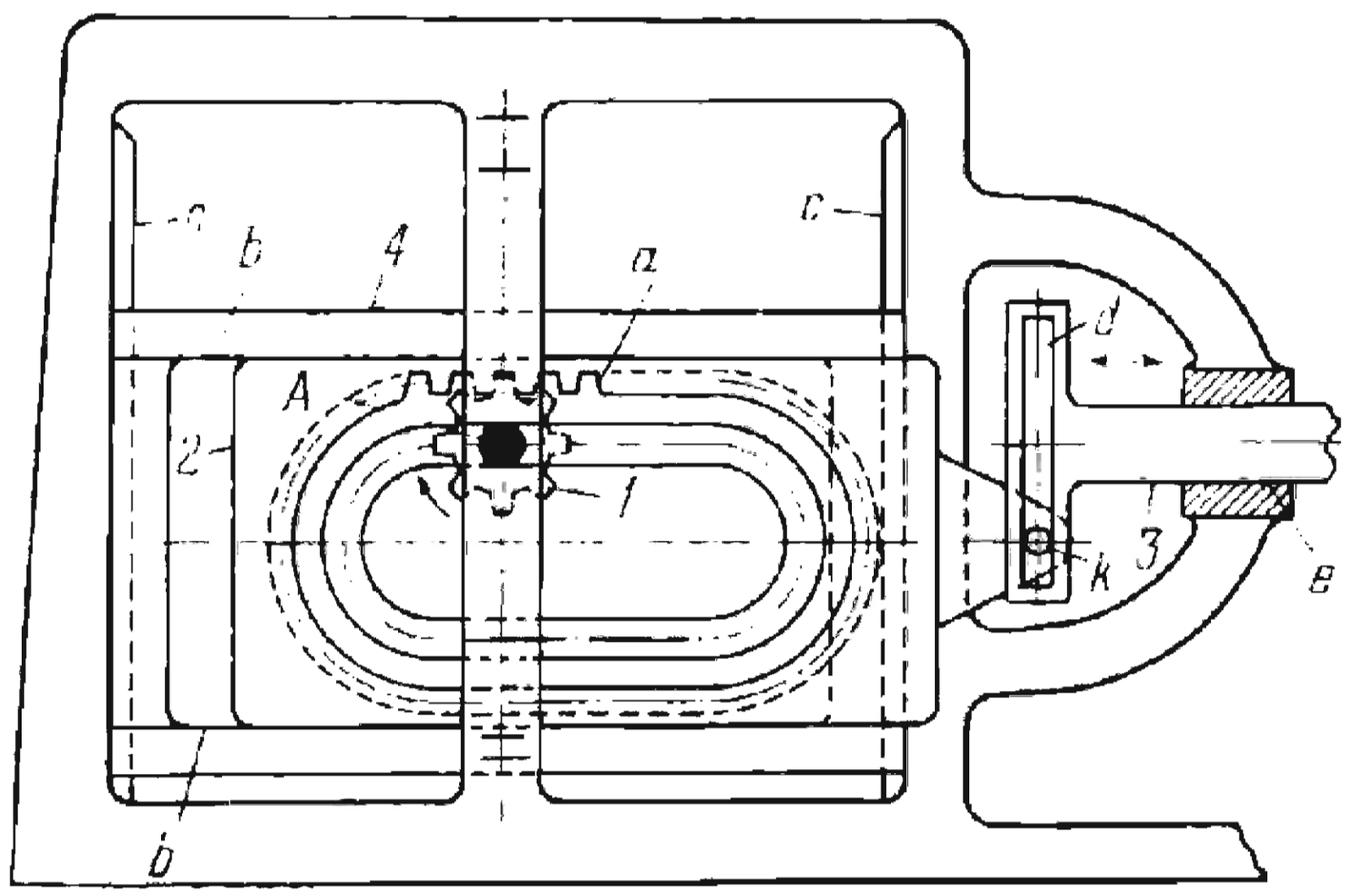

Pinion *1* rotates about fixed axis *A* and meshes with composite rack *a* of slider *2* which moves in guides *b-b* of slider *4*. Slider *4* moves in fixed guides *c-c*. Slider *2* carries pin *k* which slides in slot *d* of slider *3*. Slider *3* moves in fixed guide *e*. Composite rack *a* is made up of two straight and two semicircular portions. When driving pinion *1* rotates continuously at uniform velocity, slider *2* and slider *3* have uniform translational motion while pinion *1* meshes with the straight portions of rack *a*. During these periods, slider *4* has long dwells. When pinion *1* meshes with the semicircular portions of rack *a*, slider *3* has nonuniform motion and slider *4* has translational motion in guides *c-c*.

2511	LEVER-GEAR MECHANISM WITH A NONCIRCULAR GEAR AND A DWELL OF THE DRIVEN LINK	LrG D

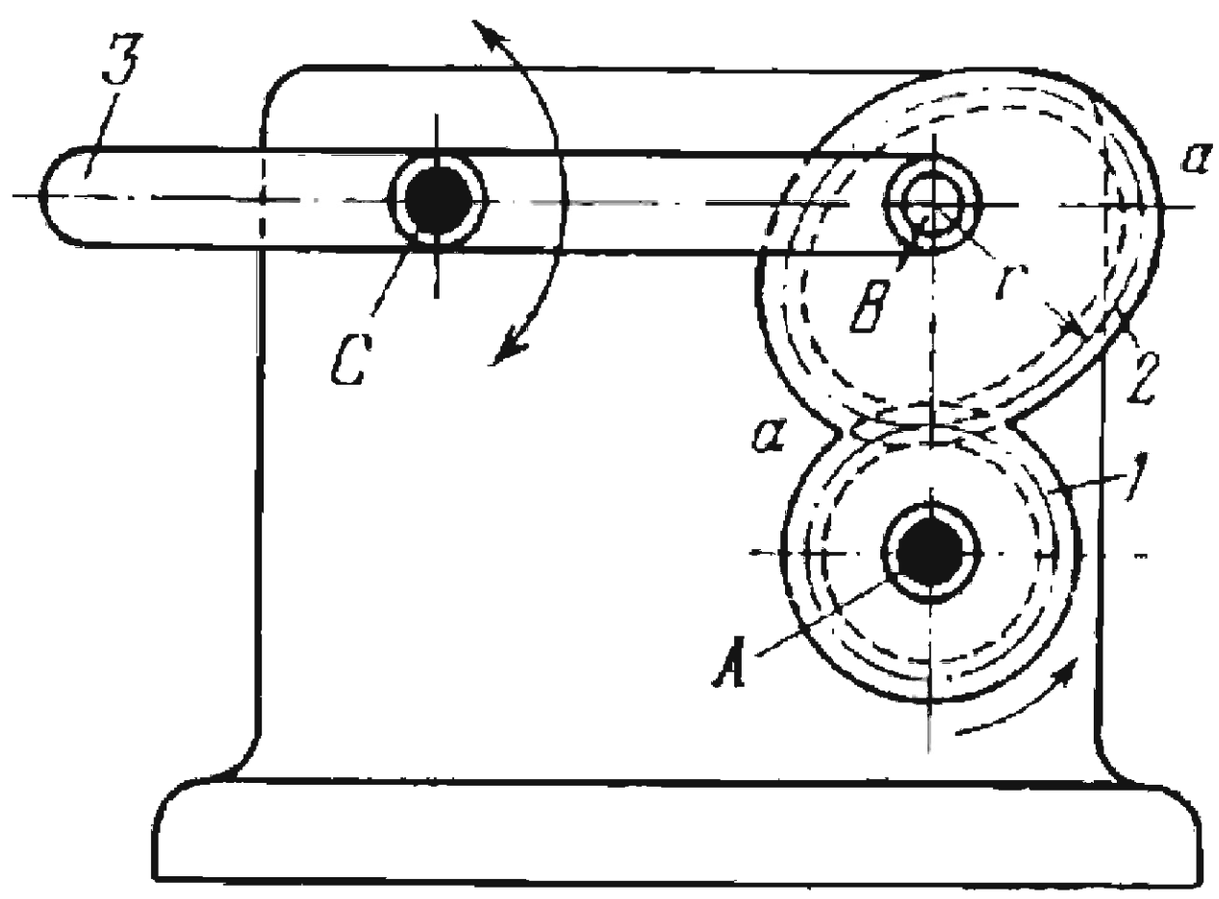

Circular gear *1* rotates about fixed axis *A* and meshes with noncircular gear *2*. Portion *a-a* of the pitch curve of gear *2* is a circular arc of radius *r*. Link *3* turns about fixed axis *C* and is connected by turning pair *B* to gear *2*. When driving gear *1* rotates, link *3* oscillates and has a dwell during the period when arc *a-a* is in engagement with gear *1*. Gears *1* and *2* are held in engagement by the weight of gear *2*.

2512	SLOTTED-LEVER-GEAR MECHANISM WITH A DWELL OF THE DRIVEN LINK	LrG D

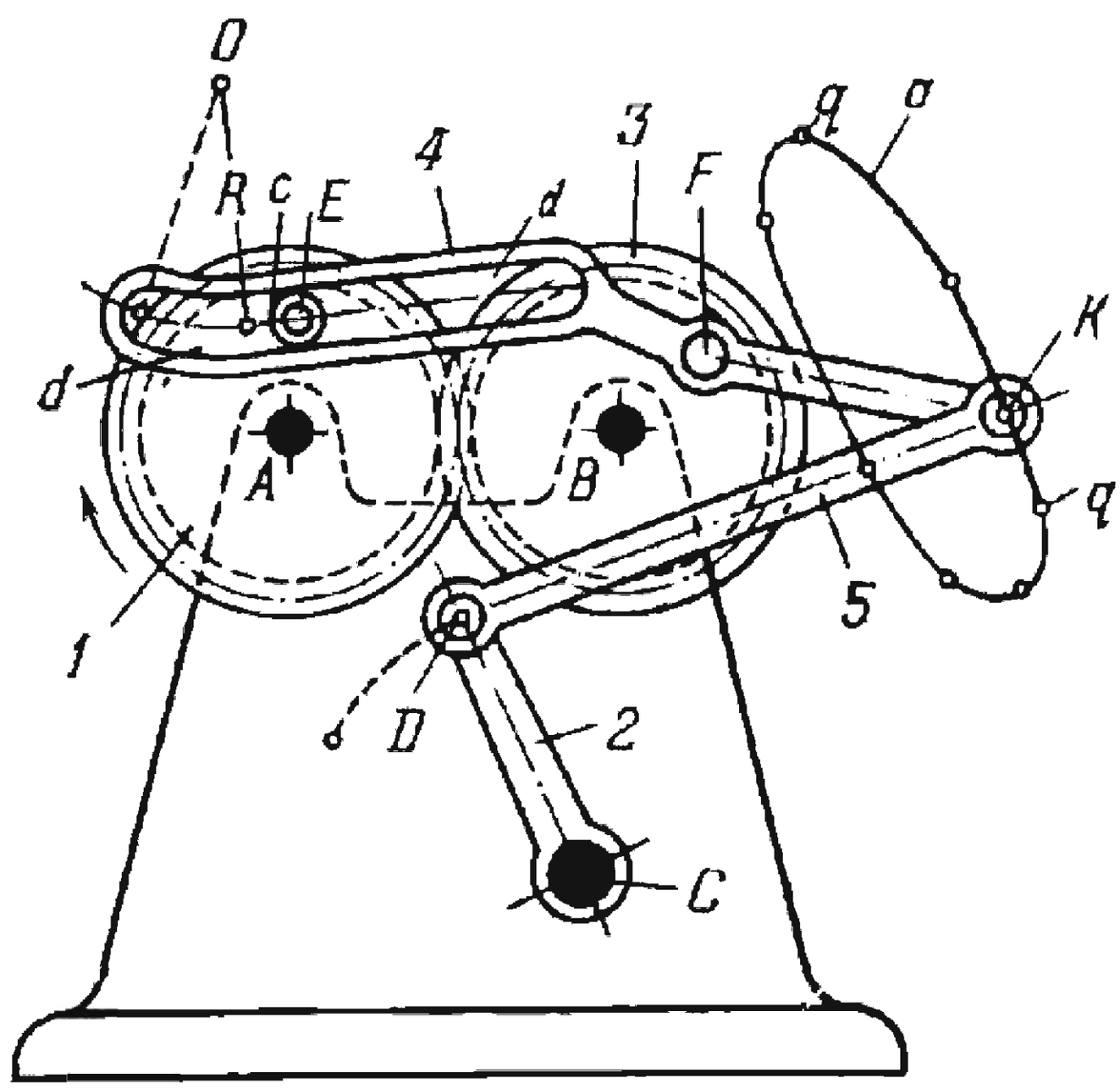

Gear *1* rotates about fixed axis *A* and meshes with gear *3* of equal pitch diameter which rotates about fixed axis *B*. Gear *1* has roller *c* which rotates about axis *E* and slides along slot *d-d* of slotted lever *4*. Lever *4* is connected by turning pairs *F* and *K* to gear *3* and link *5*. Link *5* is connected by turning pair *D* to lever *2* which turns about fixed axis *C*. The axis of slot *d* of lever *4* is made up of a straight line and an arc of radius *R*. When driving gear *1* rotates, point *K* describes complex connecting-rod curve *a* of which portion *q-q* approximates a circular arc described from point *D* with the radius $\overline{DK}$. When point *K* passes through this portion of curve *a*, driven link *2* almost ceases to oscillate, i.e. it practically has a dwell.

2513	LEVER-GEAR PLANETARY MECHANISM WITH DWELLS OF THE DRIVEN ROCKER ARM	LrG D

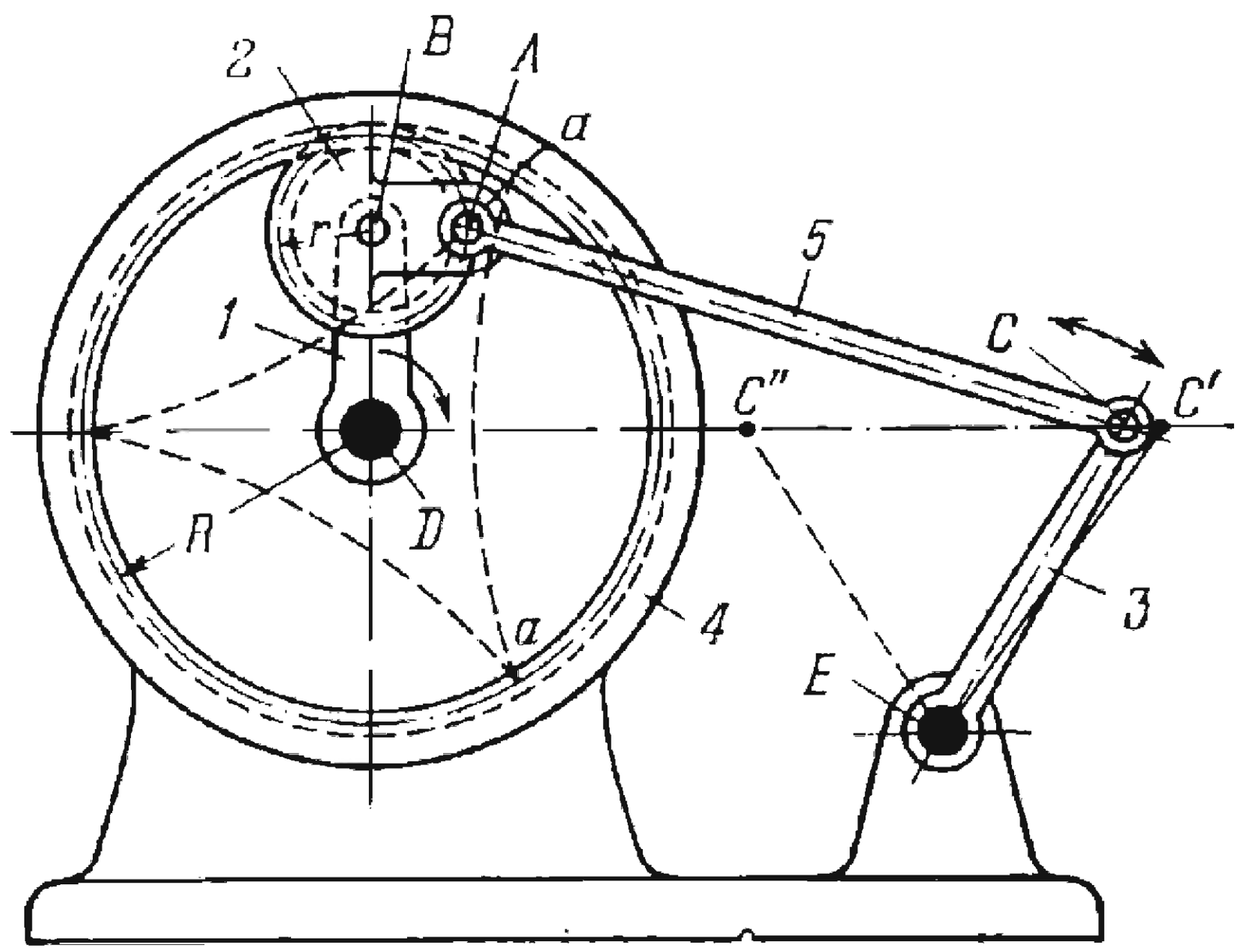

Carrier *1* rotates about fixed axis *D* and is connected by turning pair *B* to planet gear *2* which meshes with fixed internal gear *4*. Link *5* is connected by turning pairs *A* and *C* to gear *2* and to rocker arm *3* which turns about fixed axis *E*. Point *A* lies on the pitch circle of gear *2*. The dimensions of the links comply with the condition: $R = 3r$, where R and r are the pitch radii of gears *4* and *2*. Point *A* describes a three-cusped hypocycloid. Portion *a-a* of the hypocycloid differs only slightly from a circular arc of radius $\overline{CA}$ described from point C', corresponding to the extreme right-hand position of link *3*. When carrier *1* rotates continuously, rocker arm *3* has a long approximately stationary dwell in its extreme right-hand position EC' and an instantaneous dwell in its extreme left-hand position EC''.

2514	LEVER-GEAR PLANETARY MECHANISM WITH DWELLS OF THE DRIVEN LINK	LrG D

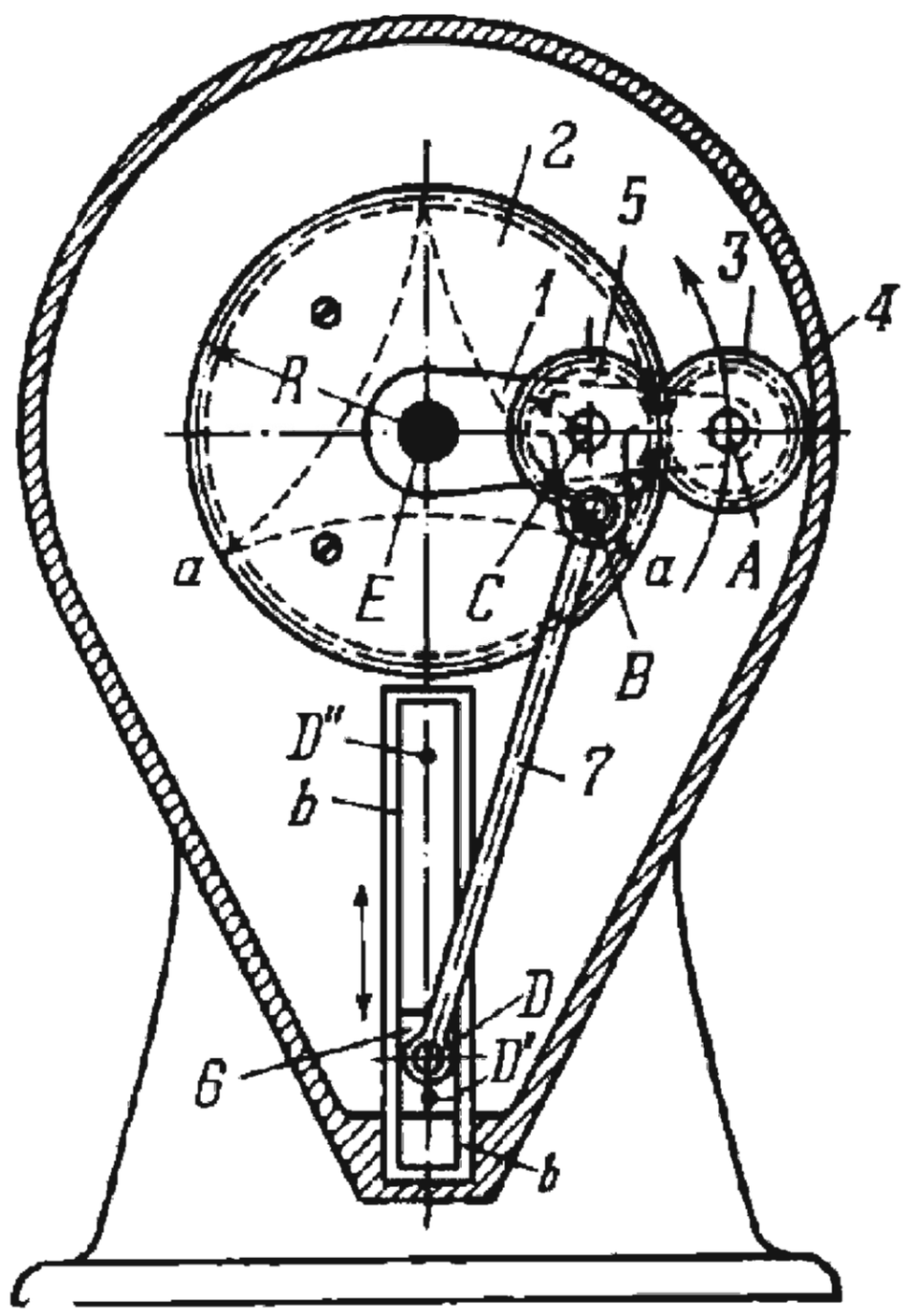

Carrier *1* rotates about fixed axis *E* and is connected by turning pair *A* to gears *3* and *4*. Sun gear *2* is rigidly attached to the base. Gears *3* and *4* are two identical planet gears, rigidly attached together, one meshing with gear *2* and the other with gear *5* which rotates about axis *C* of carrier *1*. Link *7* is connected by turning pairs *B* and *D* to gear *5* and to slider *6* which moves along fixed guides *b-b*. Point *B* lies on the pitch circle of gear *5*. The dimensions of the links comply with the condition: $R = 3r$, where R and r are the pitch radii of gears *2* and *5*. Point *B* describes a three-cusped hypocycloid. Portion *a-a* of the hypocycloid differs only slightly from a circular arc of radius $\overline{DB}$ described from point D', corresponding to the extreme lower position of slider *6*. When carrier *1* rotates continuously, slider *6* has a long approximately stationary dwell in its extreme lower position and an instantaneous dwell in its extreme upper position, corresponding to point D''.

2515	SLOTTED-LEVER-GEAR PLANETARY MECHANISM WITH FOUR INSTANTANEOUS DWELLS OF THE DRIVEN LINK	LrG D

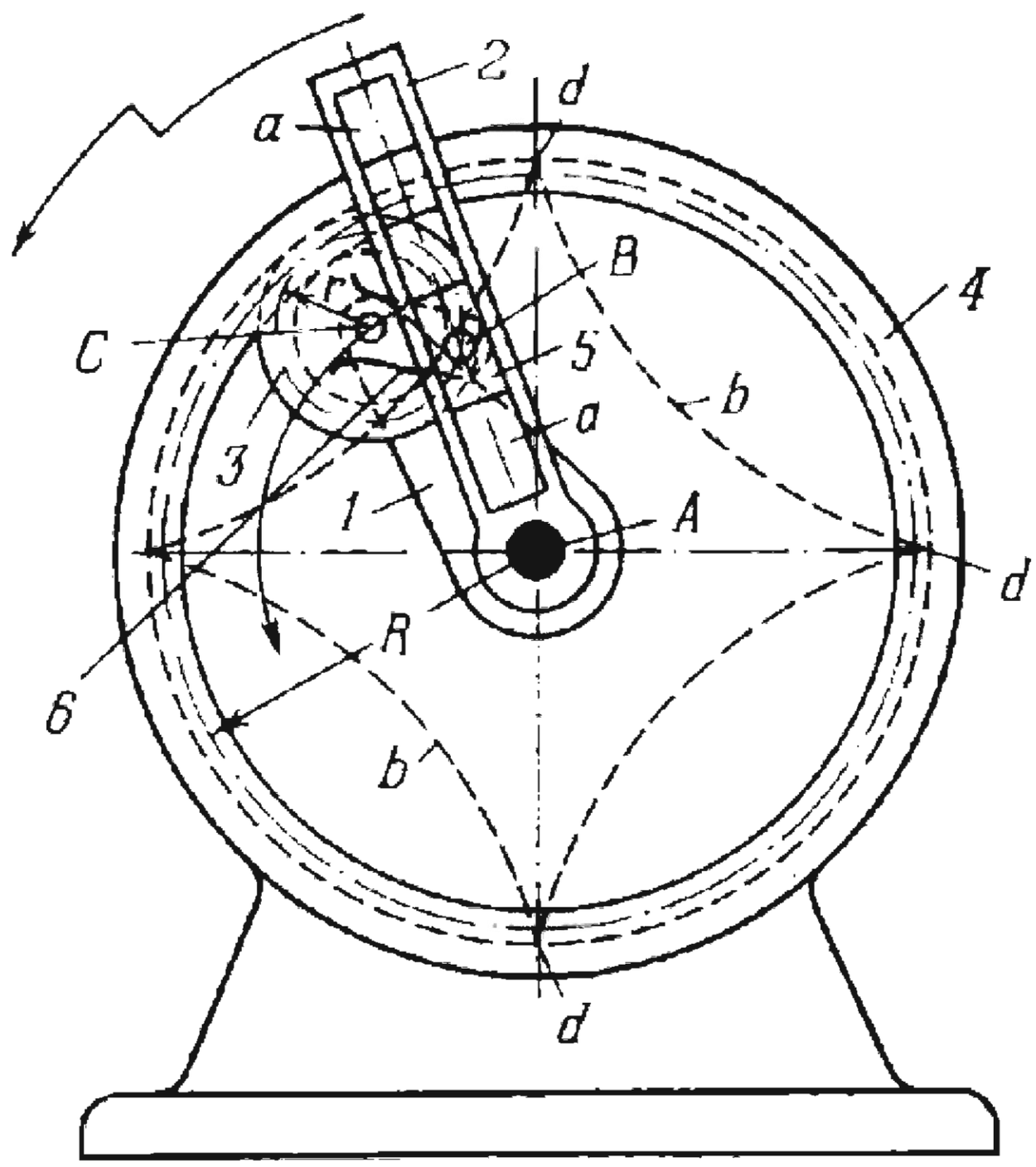

Carrier *1* rotates about fixed axis *A* and is connected by turning pair *C* to planet gear *3* which meshes with internal fixed sun gear *4*. Crank *6* is rigidly attached to (or integral with) gear *3* and is connected by turning pair *B* to slider *5* which moves along slot *a-a* of link *2*. Link *2* rotates about axis *A*. The pitch radius of gear *4* equals $R = 4r$, where r is the pitch radius of gear *3* and equals the length of crank *6*. The axis of slot *a-a* passes through point *A*. Point *B* describes four-cusped hypocycloid *b-b*. In each full revolution of carrier *1*, point *B* coincides four times with points *d*, the cusps of hypocycloid *b-b*. At these positions, link *2* has instantaneous dwells.

2516	LEVER-GEAR PLANETARY SCOTCH-YOKE MECHANISM WITH LONG DWELLS OF THE DRIVEN LINK	LrG D

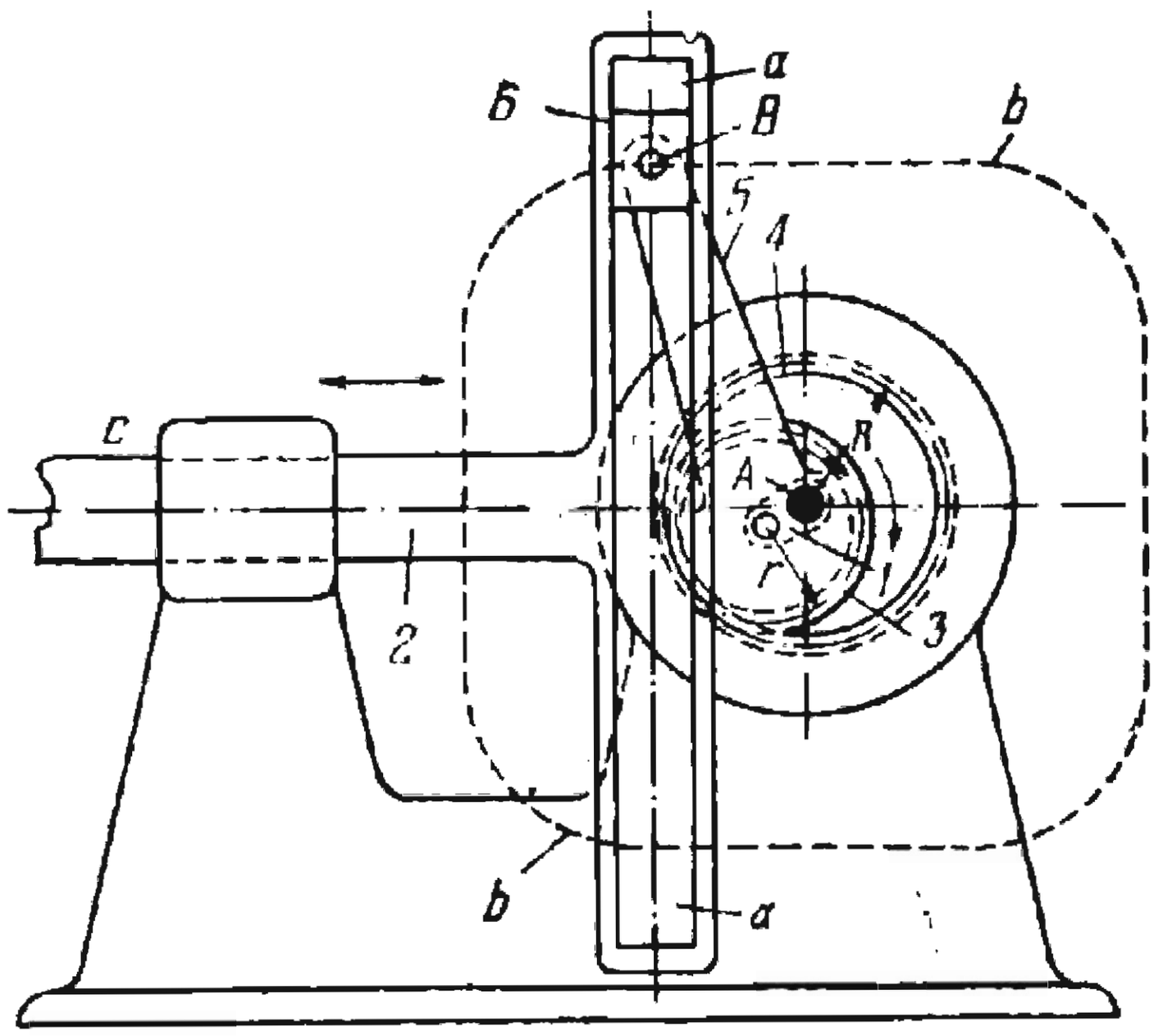

Carrier *1* rotates about fixed axis *A* and is connected by a turning pair to planet gear *3* which meshes with fixed internal sun gear *4*. Crank *5* is rigidly attached to (or integral with) gear *3* and is connected by turning pair *B* to slider *6* which moves along slot *a-a* of link *2*. Link *2* slides in fixed guide *c*. The pitch radius of gear *4* equals $R = 1.5r$, where r is the pitch radius of gear *3*. Point *B* describes path *b-b*, which is a square with rounded corners and is a prolate hypocycloid. When carrier *1* rotates at uniform velocity, link *2* reciprocates and has long dwells at the ends of its stroke when point *B* travels along the straight vertical portions of its path *b-b*. It travels with approximately uniform velocity in the middle of its stroke when point *B* is on the straight horizontal portions of its path.

2517	LEVER-GEAR PLANETARY SCOTCH-YOKE MECHANISM WITH AN APPROXIMATE DWELL OF THE DRIVEN LINK	LrG D

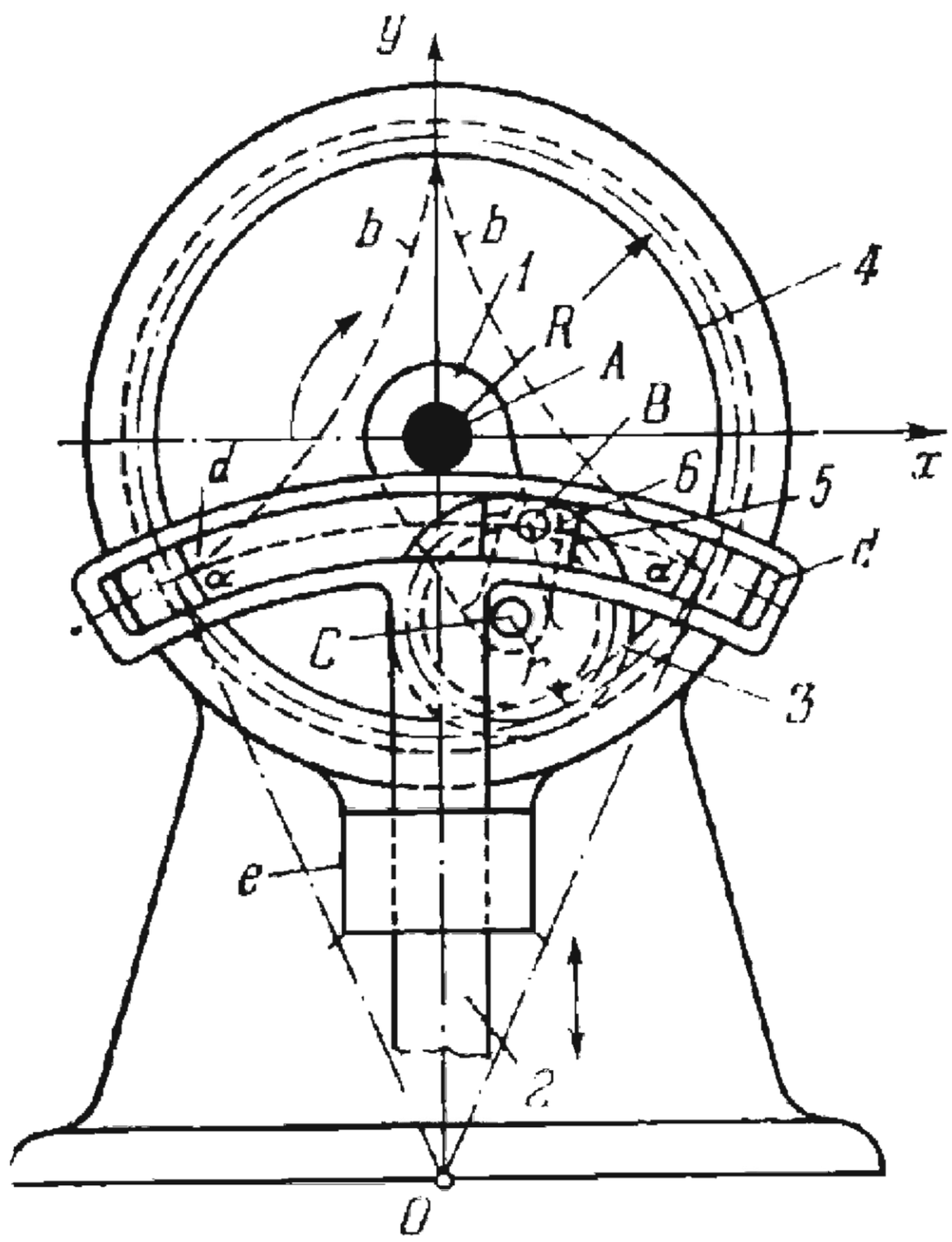

Carrier *1* rotates about fixed axis *A* and is connected by turning pair *C* to planet gear *3* which meshes with fixed internal sun gear *4*. Crank *6* is rigidly attached to (or integral with) gear *3* and is connected by turning pair *B* to slider *5* which moves along circular slot *d-d* of link *2*. Link *2* slides in fixed guide *e*. The pitch radius of gear *4* equals $R = 3r$, where r is the pitch radius of gear *3* and equals length $\overline{CB}$ of crank *6*. Centre *O* of circular slot *d-d* lies on the axis of guide *e* which passes through point *A*. Point *B* of crank *6* describes three-cusped hypocycloid *b-b*. If radius $\overline{OB}$ of circular slot *d-d* is designed so that the arc described passes through two cusps of hypocycloid *b-b*, then link *2* is almost stationary while point *B* travels along portion α-α of the hypocycloid.

2518	LEVER-GEAR MECHANISM WITH A NONCIRCULAR GEAR WITH TWO DWELLS	LrG D

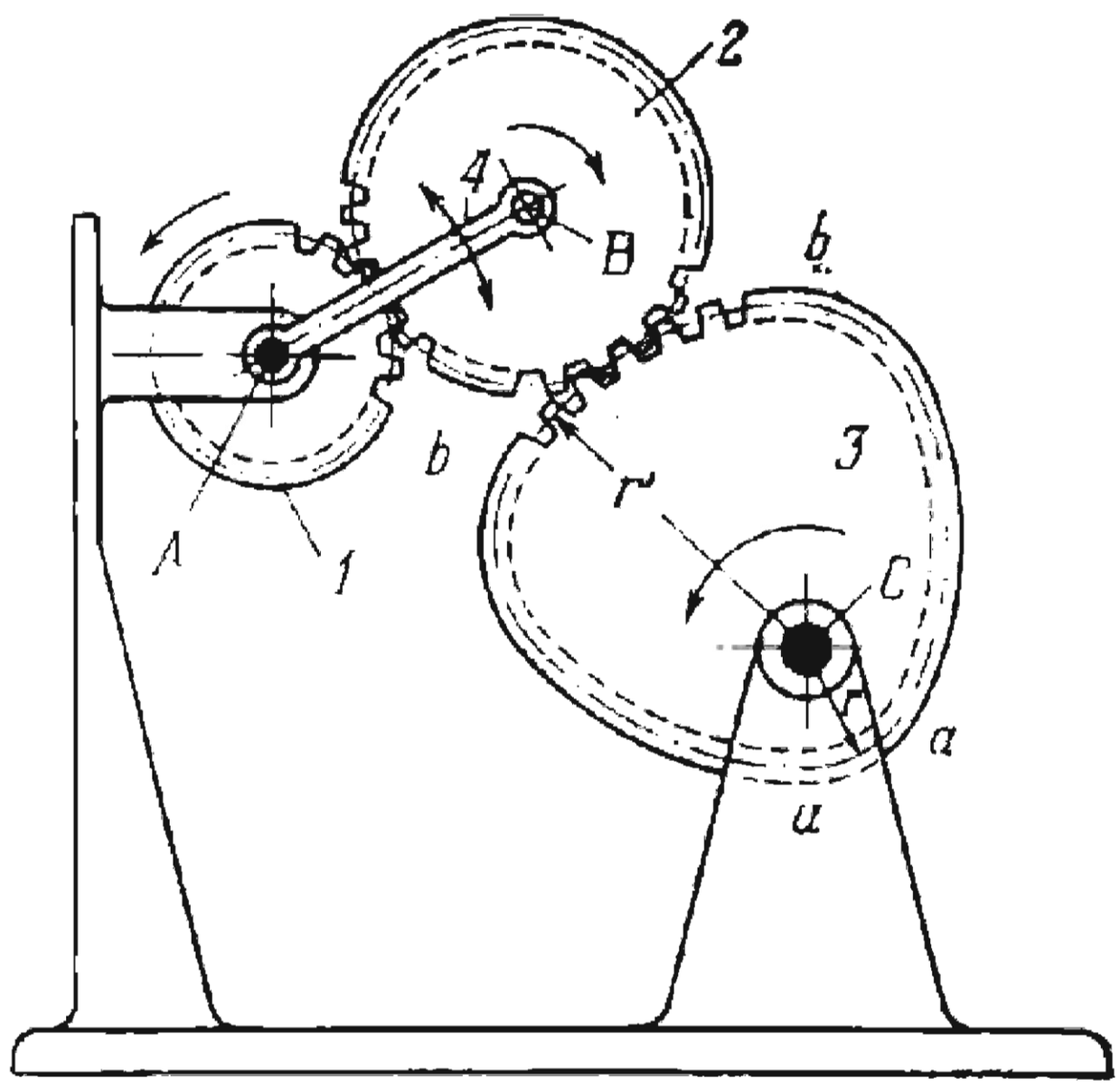

Circular gear *1* rotates about fixed axis *A* and meshes with circular gear *2*. Link *4* turns about axis *A* and is connected by turning pair *B* to gear *2*. Gear *2* meshes with noncircular gear *3* which rotates about fixed axis *C*. Portions *a-a* and *b-b* of the pitch curve of gear *3* are circular arcs of radii *r* and *r'*. When driving gear *1* rotates, driven link *4* oscillates and has two dwells during the periods when arcs *a-a* and *b-b* of gear *3* are in engagement with gear *2*. The mechanism can also be employed to obtain a variable transmission ratio from gear *1* to gear *3*. Owing to gear *2*, gears *1* and *3* rotate in the same direction. Gears *2* and *3* are held in engagement by the weight of gear *2*.

2519	SLOTTED-LEVER-GEAR OPERATING CLAW MECHANISM OF A MOTION PICTURE CAMERA	LrG OC

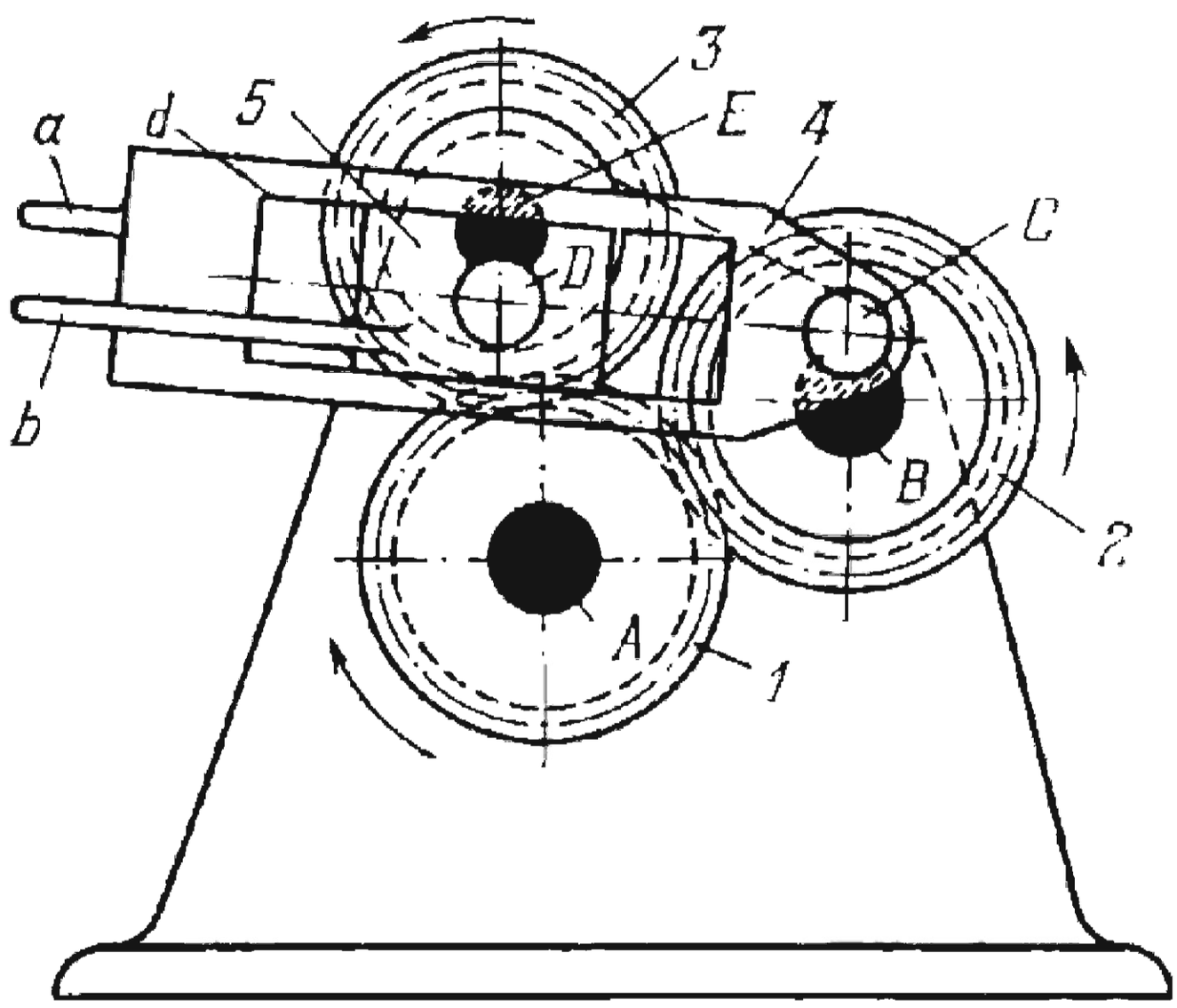

Gear *1* rotates about fixed axis *A* and meshes with gears *2* and *3* which rotate about fixed axes *B* and *E*. Gear *2* is connected by turning pair *C* to slotted lever *4* and gear *3* is connected by turning pair *D* to slider *5* which moves along slot *d* of lever *4*. When driving gear *1* rotates, the tip of claw *a* of lever *4* is inserted into a perforation of the film, advances the film and is withdrawn from the perforation. The tip of claw *b* of slider *5* is inserted into another perforation after claw *a* is withdrawn and holds the film stationary until it is to be advanced again.

2520	LEVER-GEAR OPERATING CLAW MECHANISM OF A MOTION PICTURE CAMERA	LrG OC

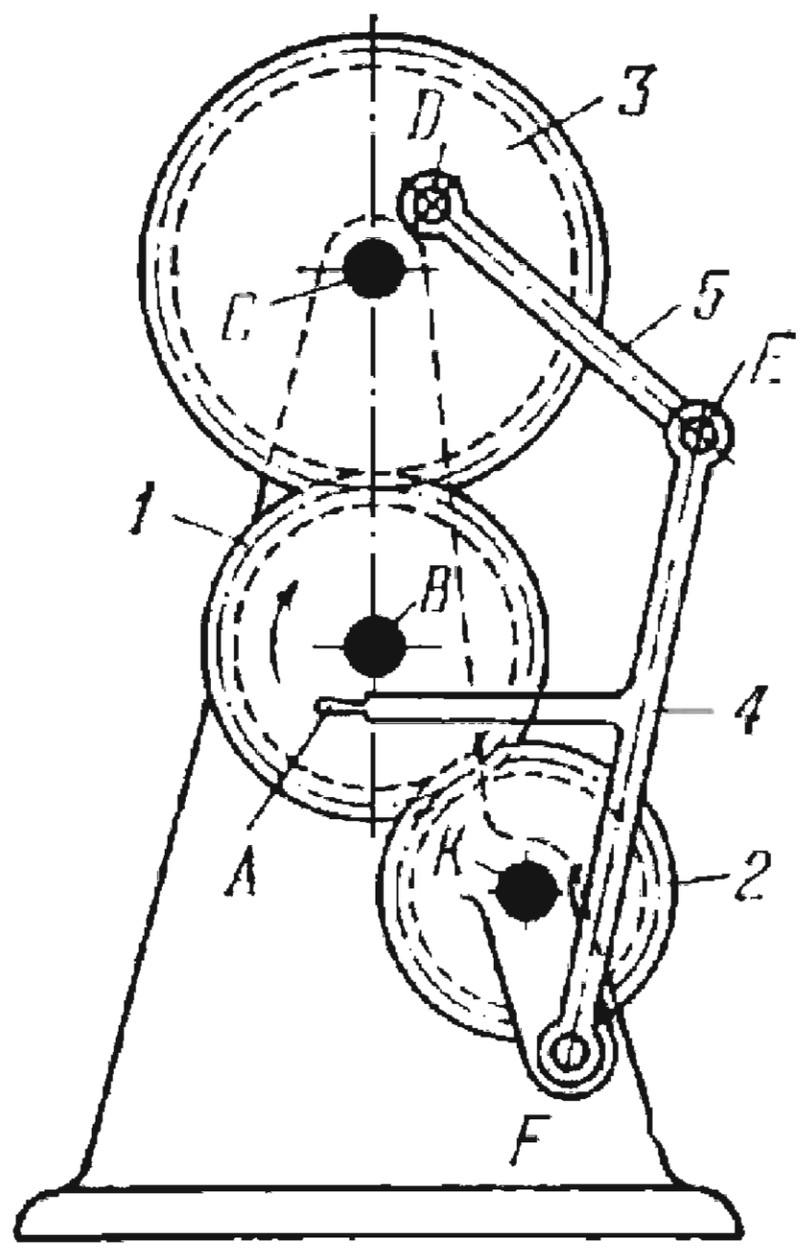

Gear *1* rotates about fixed axis *B* and meshes with gears *2* and *3* which rotate about fixed axes *K* and *C*. Links *4* and *5* are connected by turning pairs *F* and *D* to gears *2* and *3*, and to each other by turning pair *E*. When driving gear *1* rotates, the tip of claw *A* of link *4* describes a complex connecting-rod curve of which a portion is used to insert claw *A* into a perforation of the film, to advance the film and to withdraw claw *A* from the perforation.

2521	LEVER-GEAR OPERATING CLAW MECHANISM OF A MOTION PICTURE CAMERA	LrG OC

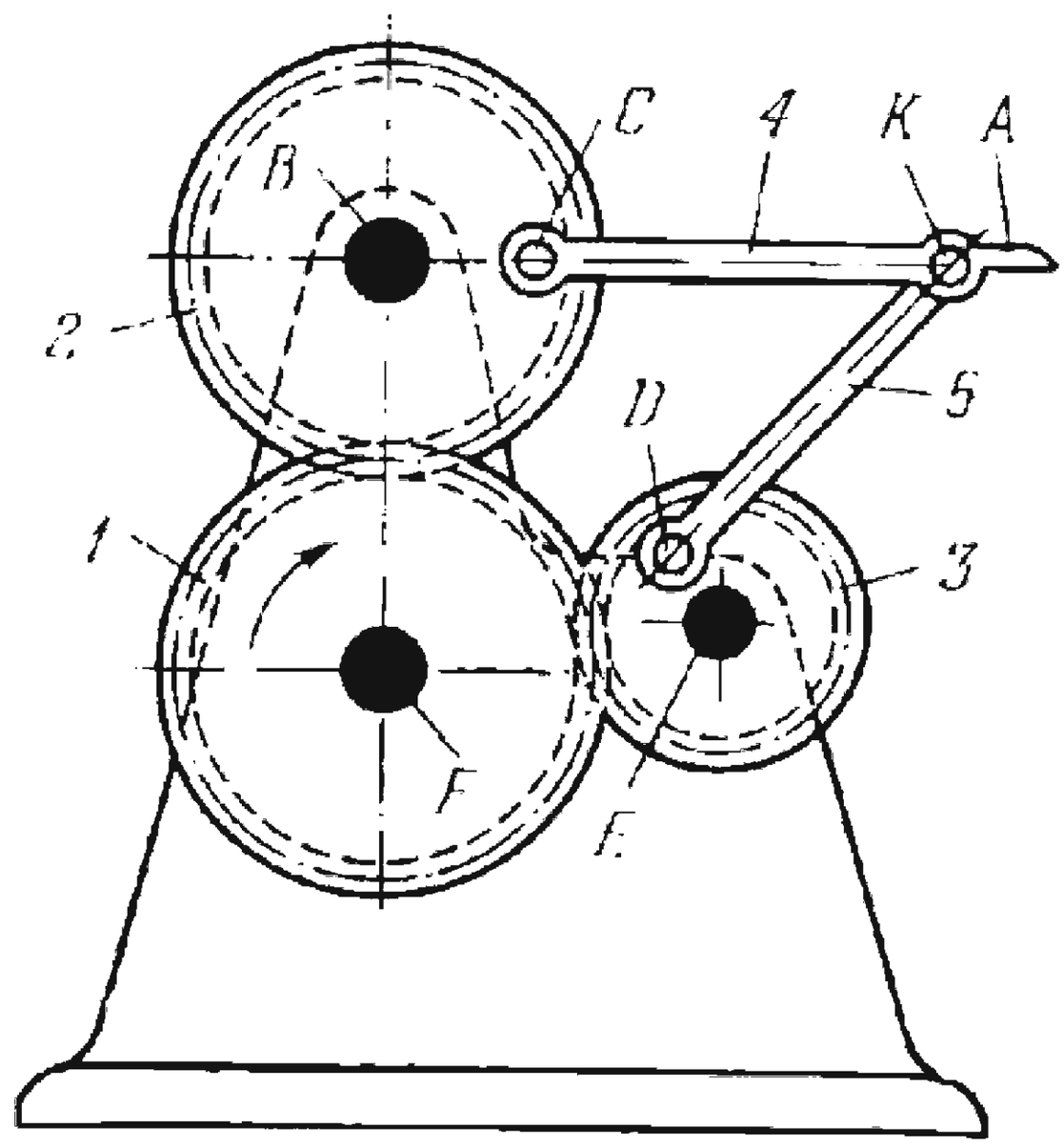

Gear *1* rotates about fixed axis *F* and meshes with gears *2* and *3* which rotate about fixed axes *B* and *E*. Links *4* and *5* are connected by turning pairs *C* and *D* to gears *2* and *3*, and to each other by turning pair *K*. When driving gear *1* rotates, the tip of claw *A* of link *4* describes a complex connecting-rod curve of which a portion is used to insert claw *A* into a perforation of the film, to advance the film and to withdraw claw *A* from the perforation.

2522	LEVER-GEAR OPERATING CLAW MECHANISM OF A MOTION PICTURE CAMERA	LrG OC

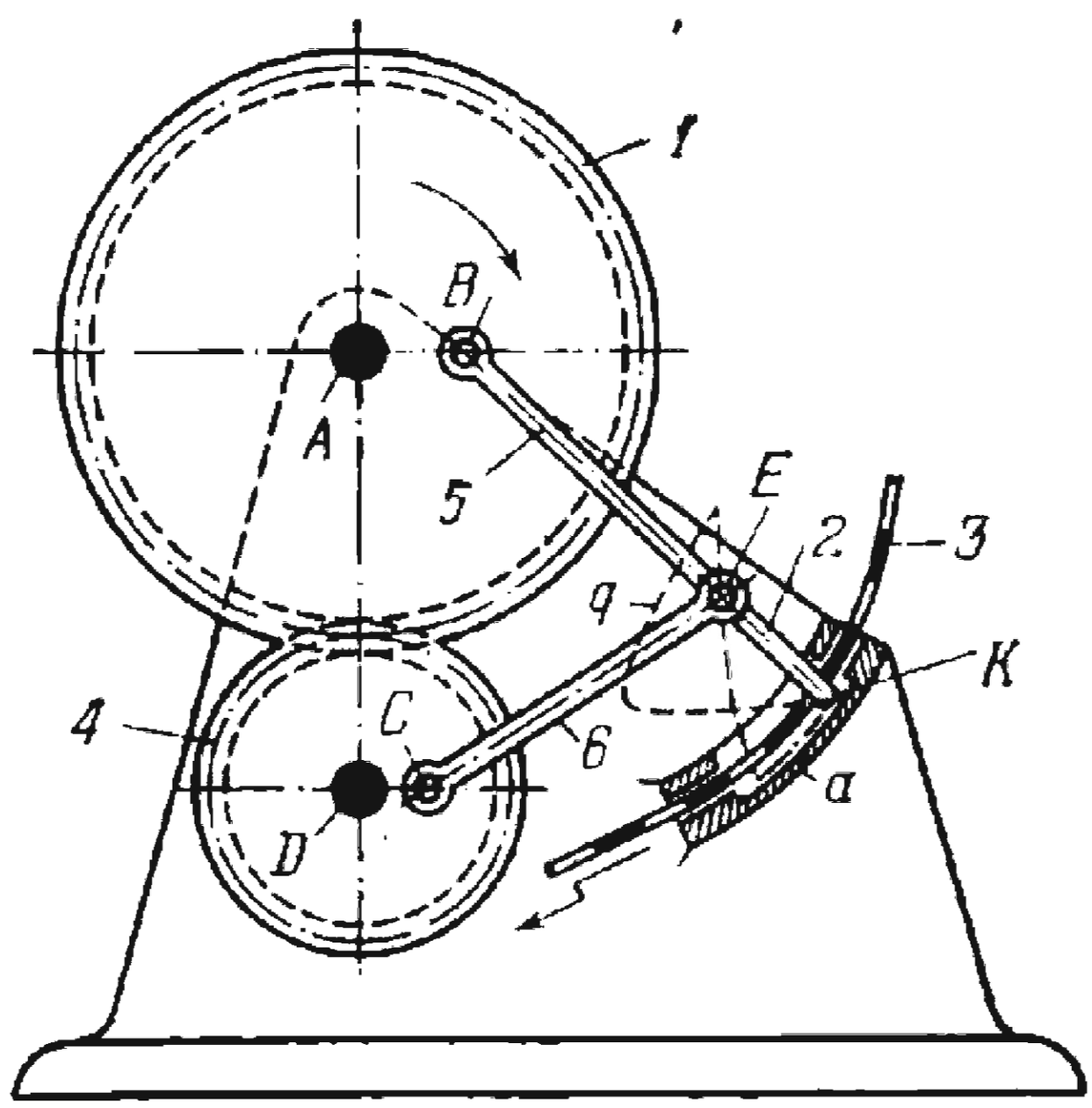

Gear *1* rotates about fixed axis *A* and meshes with gear *4* which rotates about fixed axis *D*. Links *5* and *6* are connected by turning pairs *B* and *C* to gears *1* and *4*, and to each other by turning pair *E*. When driving gear *1* rotates, tip *K* of claw *2* of link *5* describes a complex connecting-rod curve *q* of which a portion is used to insert claw *2* into a perforation of film *3*, to advance the film as shown by the arrow and to withdraw claw *2* from the perforation.

2523	LEVER-GEAR PLANETARY STRAIGHT-LINE MECHANISM OF A PRESS	LrG Gl

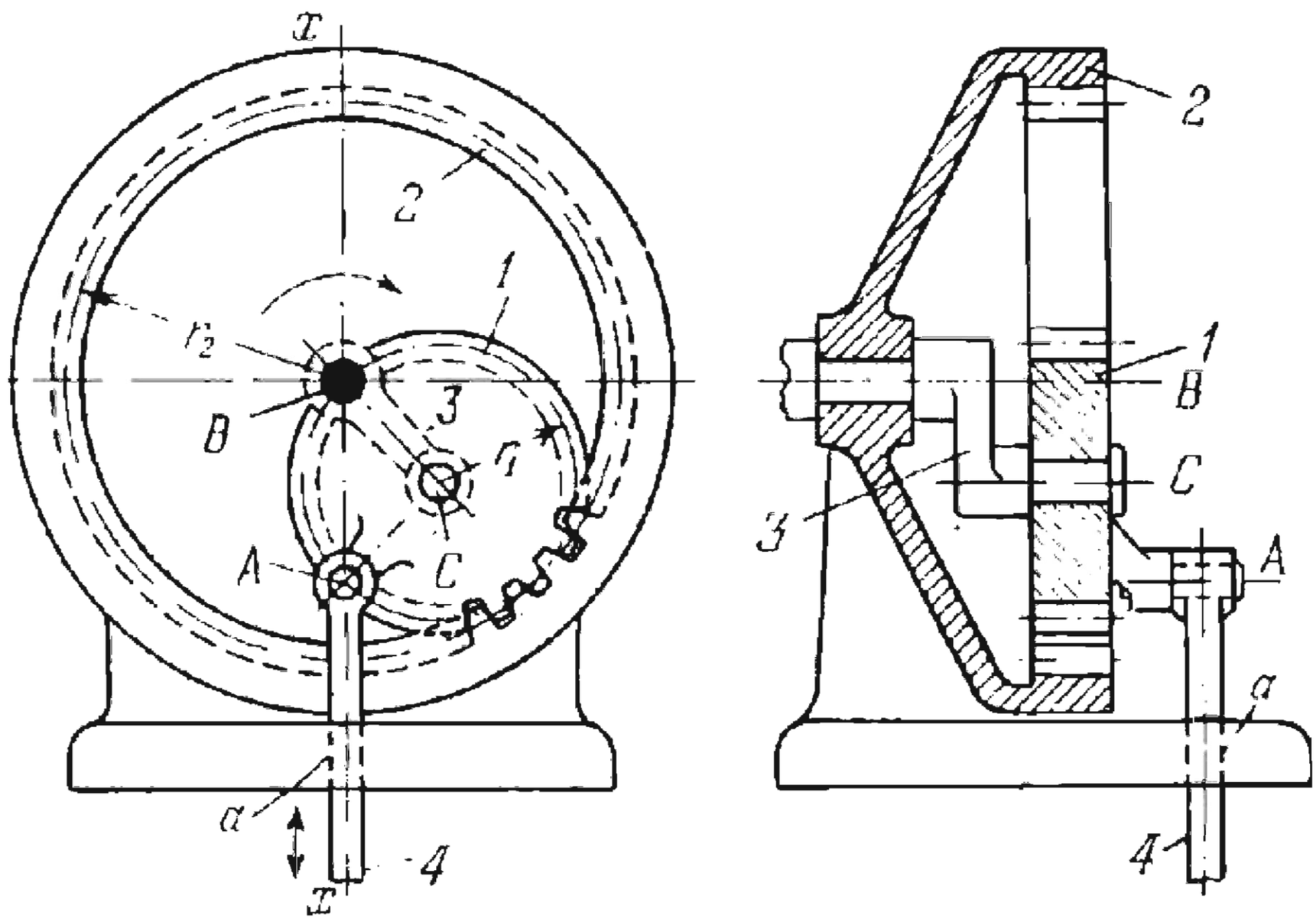

Driving carrier *3* rotates about fixed axis *B* and is connected by turning pair *C* to planet gear *1* which meshes with fixed internal sun gear *2*. The pitch radius of gear *2* is $r_2 = 2r_1$, where r_1 is the pitch radius of gear *1*. When carrier *3* rotates, point *A* of gear *1*, lying on its pitch circle, travels in a straight line along axis *x-x*. Thus, ram *4* of the press mechanism slides in fixed guide *a* along axis *x-x*.

2524	LEVER-GEAR APPROXIMATE STRAIGHT-LINE MECHANISM	LrG Gl

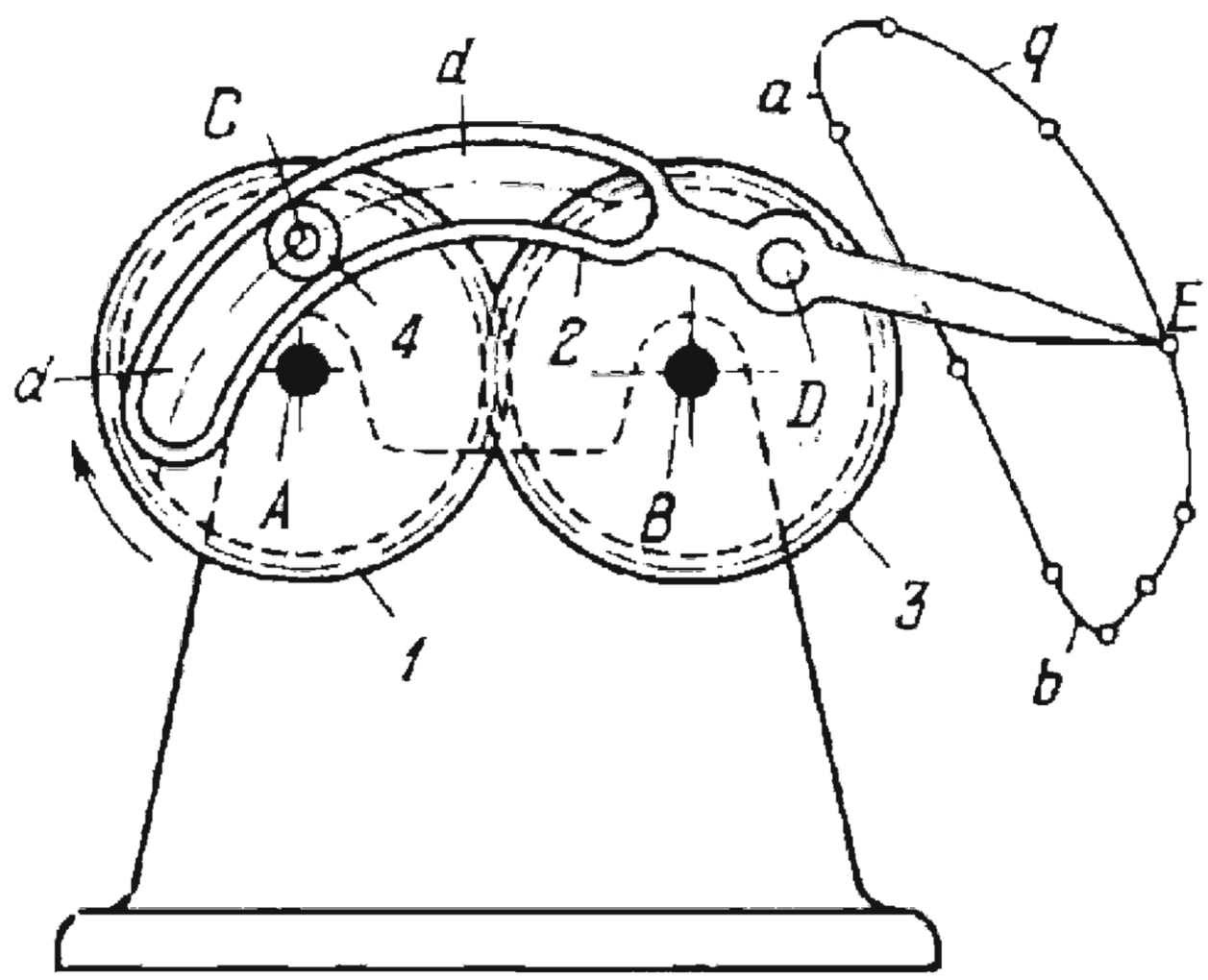

Gear *1* rotates about fixed axis *A* and meshes with gear *3* which rotates about fixed axis *B*. Pin *4* of gear *1* rotates about axis *C* and slides along curvilinear slot *d-d* of slotted lever *2* which is connected by turning pair *D* to gear *3*. The shape of slot *d-d* is designed so that point *E* of lever *2* describes curve *q* of which portion *ab* is approximately a straight line.

2525	LEVER-GEAR APPROXIMATE STRAIGHT-LINE MECHANISM	LrG GI

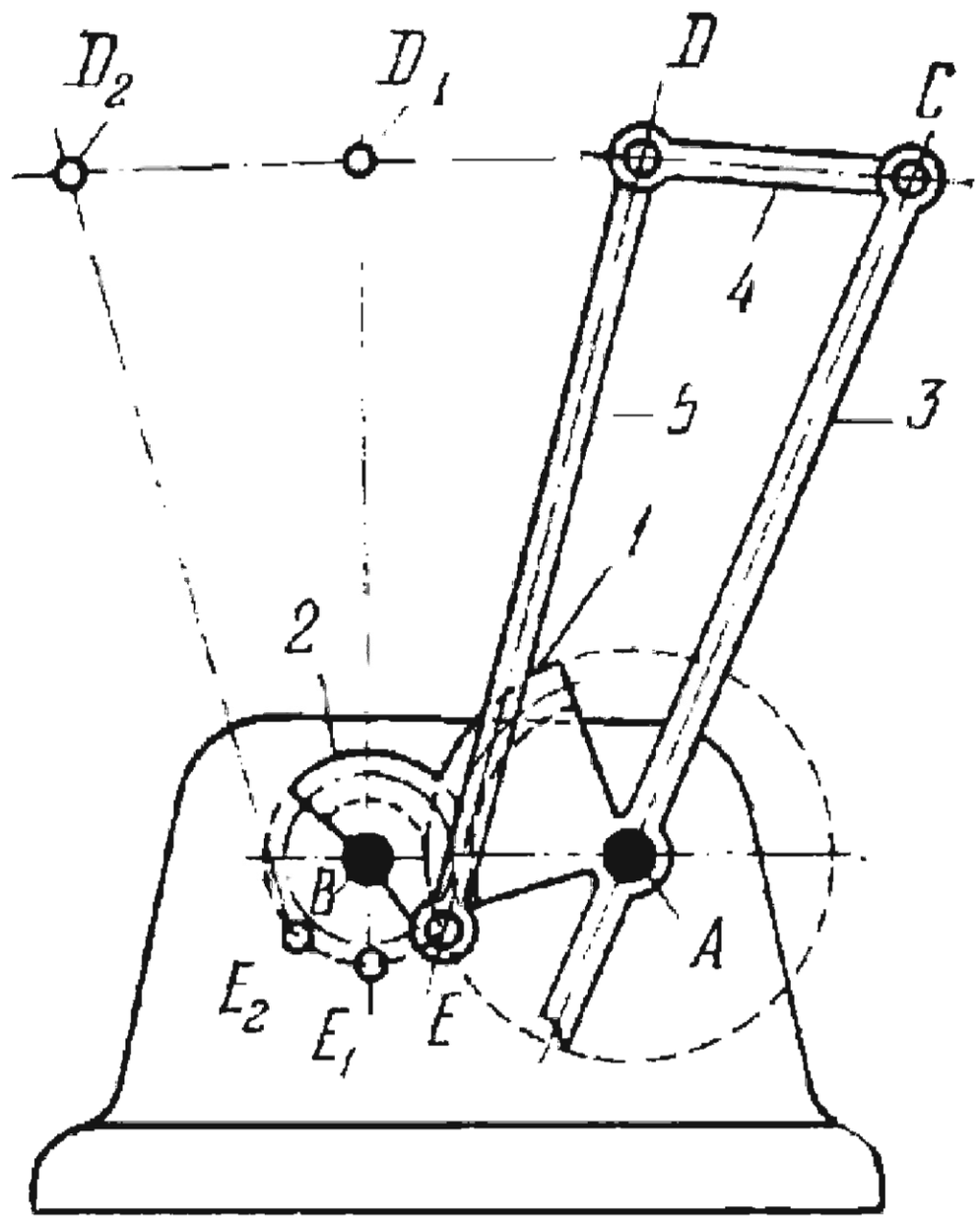

Segment gear *1* turns about fixed axis *A* and meshes with segment gear *2* which turns about fixed axis *B*. Link *3* is rigidly attached to segment gear *1* and is connected by turning pair *C* to link *4*. Link *5* is connected by turning pairs *D* and *E* to link *4* and to segment gear 2. The dimensions of the links comply with the conditions: $\overline{AC} = 4r_1$, $\overline{DC} = 1.5r_1$, $\overline{ED} = 4.5r_1$, $\overline{AB} = 1.5r_1$, $\overline{BE} = 0.5r_1$ and $r_2 = 0.5r_1$, where r_1 and r_2 are the pitch radii of segment gears *1* and *2*. When segment gear *1* turns, point *E* consecutively passes through points E, E_1 and E_2, point *D* through points D, D_1 and D_2 which are on an approximately straight line.

2526	LEVER-GEAR EXACT STRAIGHT-LINE MECHANISM	LrG Gl

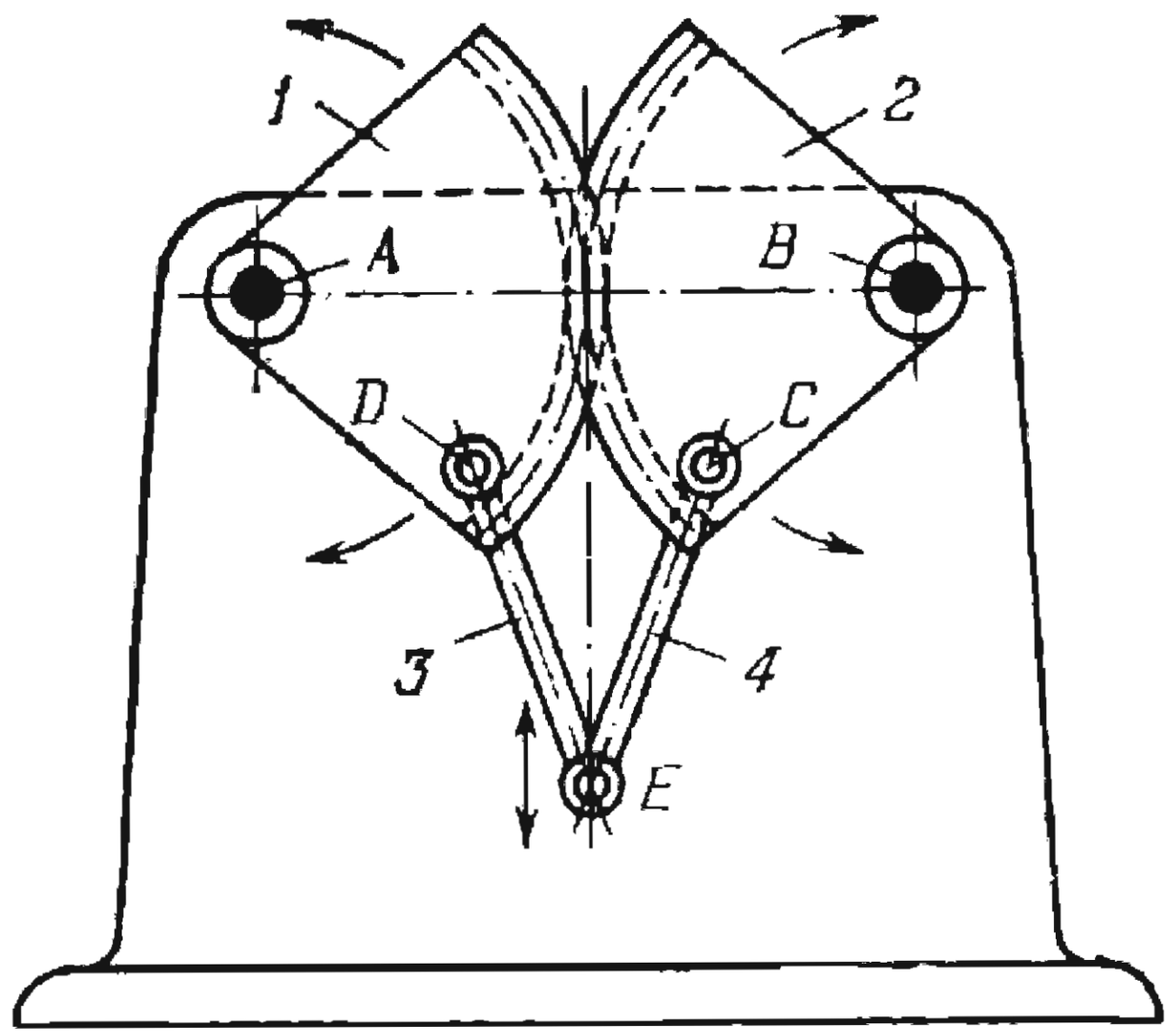

Segment gear *1* turns about fixed axis *A* and meshes with segment gear *2* which turns about fixed axis *B*. Links *3* and *4* are connected by turning pairs *D* and *C* to segment gears *1* and *2*, and to each other by turning pair *E*. The dimensions of the links comply with the conditions: $r_1 = r_2$, $\overline{AD} = \overline{BC}$ and $\overline{DE} = \overline{CE}$, where r_1 and r_2 are the pitch radii of segment gears *1* and *2*. When segment gear *1* turns, point *E* describes a straight line perpendicular to line *AB*.

2527	LEVER-GEAR PLANETARY STRAIGHT-LINE MECHANISM	LrG Gl

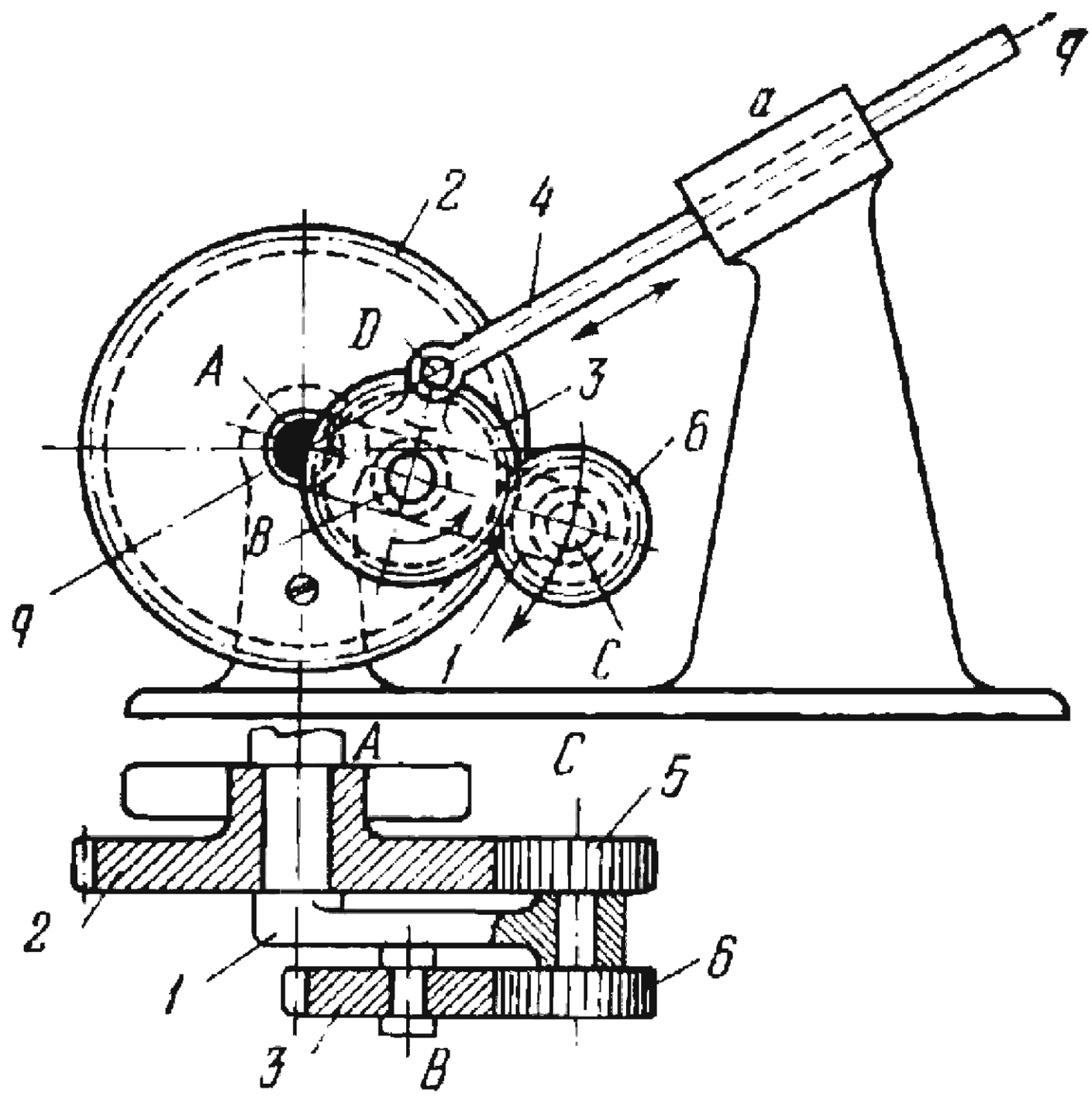

Carrier *1* rotates about fixed axis *A* and is connected by turning pairs *B* and *C* to gear *3* and to planet gears *5* and *6*. Planet gear *5* meshes with fixed sun gear *2* which is rigidly attached to the base. Planet gear *6* is rigidly attached to gear *5* and meshes with gear *3*. Slider *4* is connected by turning pair *D* to gear *3* and moves in fixed guide *a* whose axis *q-q* passes through point *A*. The dimensions of the links comply with the conditions: $r_5 = r_6$ and $r_2 = 2r_3$, where r_2, r_3, r_5 and r_6 are the pitch radii of gears *2*, *3*, *5* and *6*. When carrier *1* rotates, gear *5* rolls around fixed gear *2* and gear *6* drives gear *3*. Any point *D* of gear *3*, lying on its pitch circle, describes straight line *q-q* passing through centre *A* of gear *2*.

2528	NORMAN LEVER-GEAR STRAIGHT-LINE MECHANISM	LrG G1

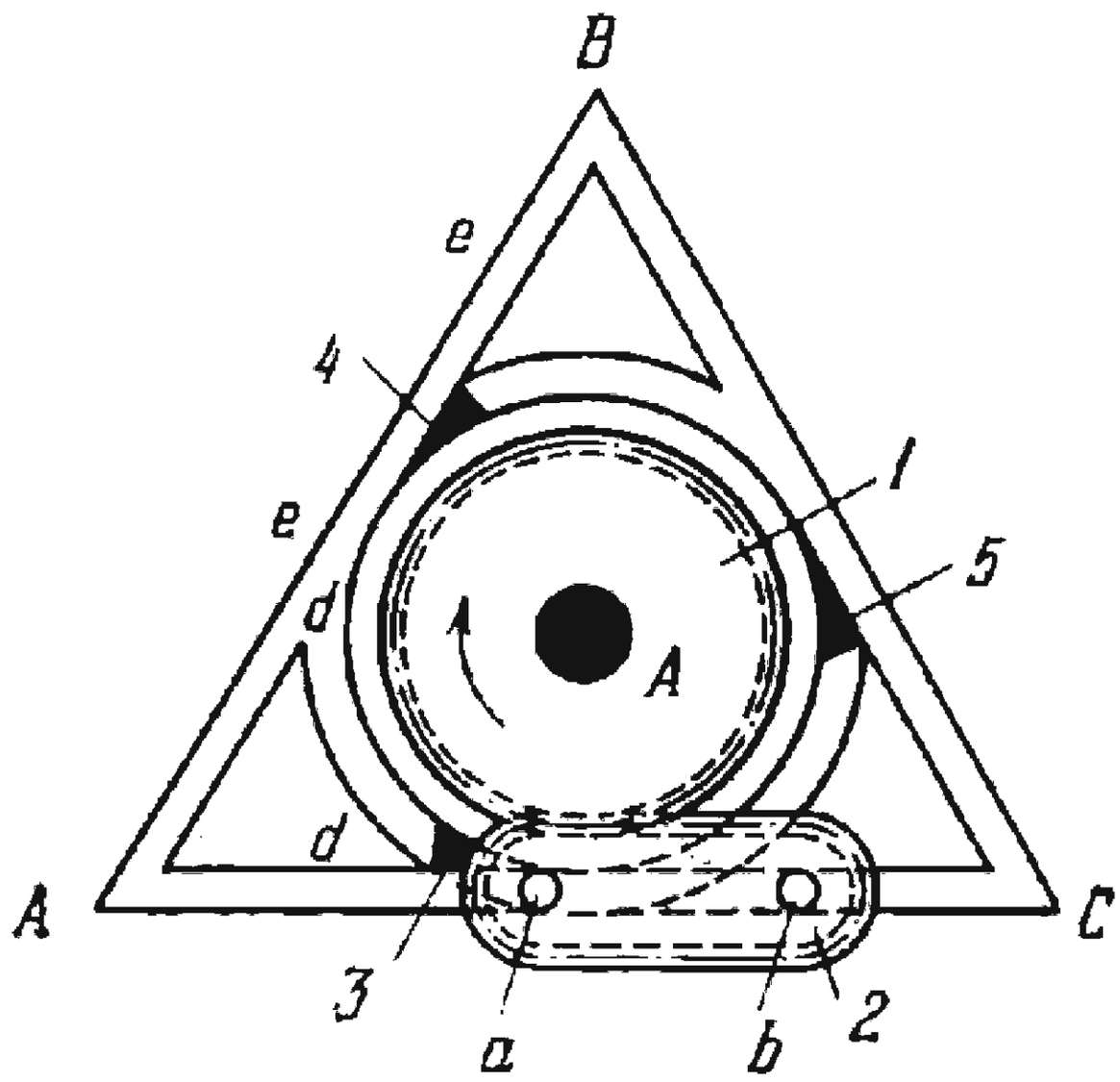

Gear *1* rotates about fixed axis *A* and meshes with composite rack *2*. When gear *1* rotates clockwise, rack *2* travels in a straight line to the left. As soon as pin *a* of the rack passes the edge of wedge *3*, the wedge automatically closes off the straight guide. As a result, pin *b* moves along arc *d-d* even before pin *a* reaches apex *A* of triangle *ABC*. Owing to the action of springs (not shown), wedges *3*, *4* and *5* always close off the circular guides. Therefore, when pin *b* has passed along arc *d-d*, it travels along straight portion *e-e*. As soon as pin *b* passes the edge of wedge *4*, the wedge automatically closes off the straight guide, and pin *a* moves along the circular guide even before pin *b* reaches point *B*.

This sequence of motions continues around the triangle.

2529	LEVER-GEAR MECHANISM OF A CENTRIFUGAL TACHOMETER WITH A SPEED GEARBOX	LrG M

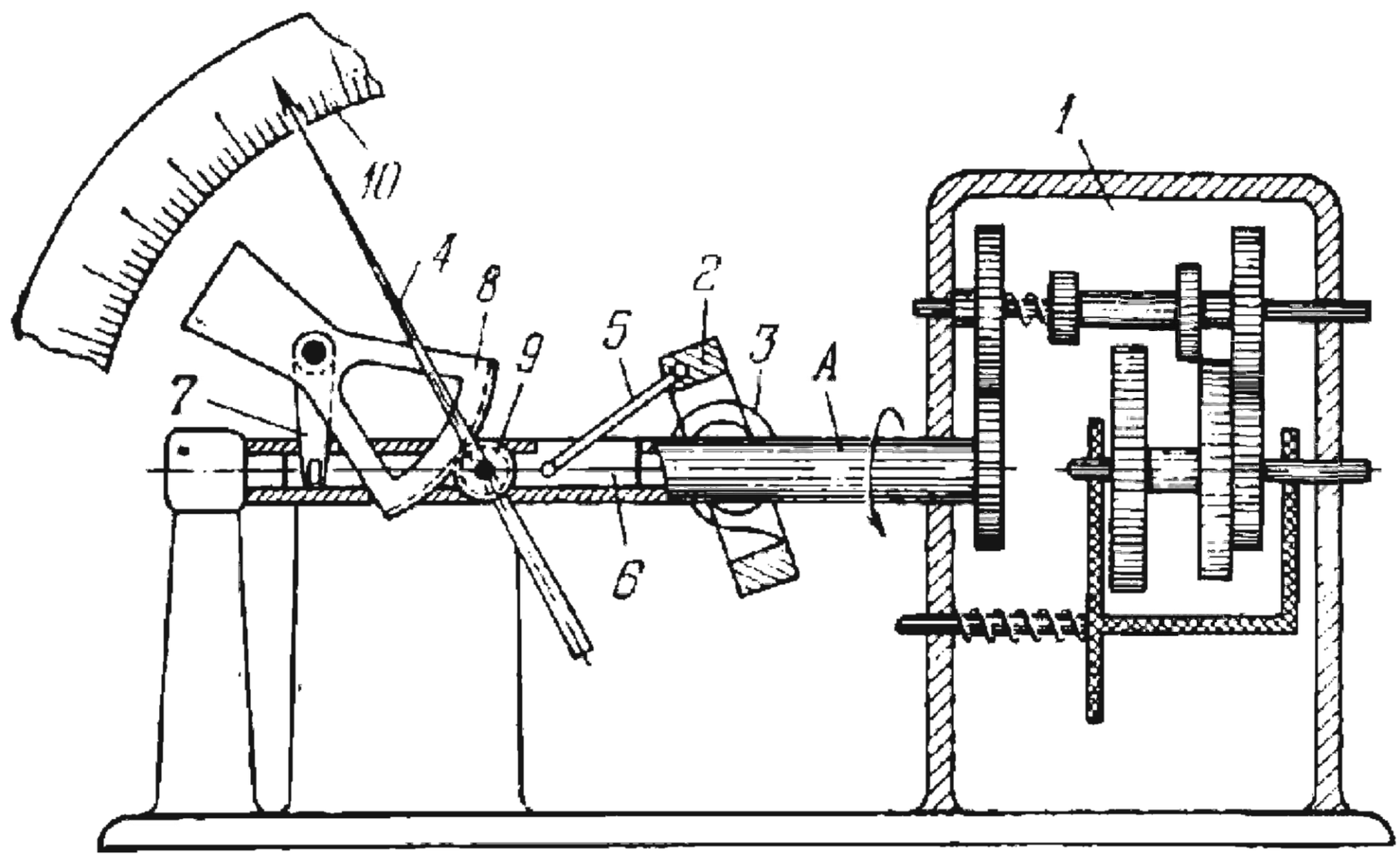

Shaft *A* of the tachometer is driven by the shaft whose speed is being measured through speed gearbox *1* which enables the range of speeds that can be measured to be extended. When shaft *A* rotates, the moment of the centrifugal force tends to turn annular mass *2* to the vertical position, overcoming the resistance of spring *3*. This motion is transmitted to hand *4* by connecting rod *5*, sleeve *6*, lever *7*, which is rigidly attached to segment gear *8*, and pinion *9*. Thus, the angular velocity of the shaft being tested is indicated on scale *10*.

2530	LEVER-GEAR MECHANISM OF A CENTRIFUGAL TACHOMETER	LrG M

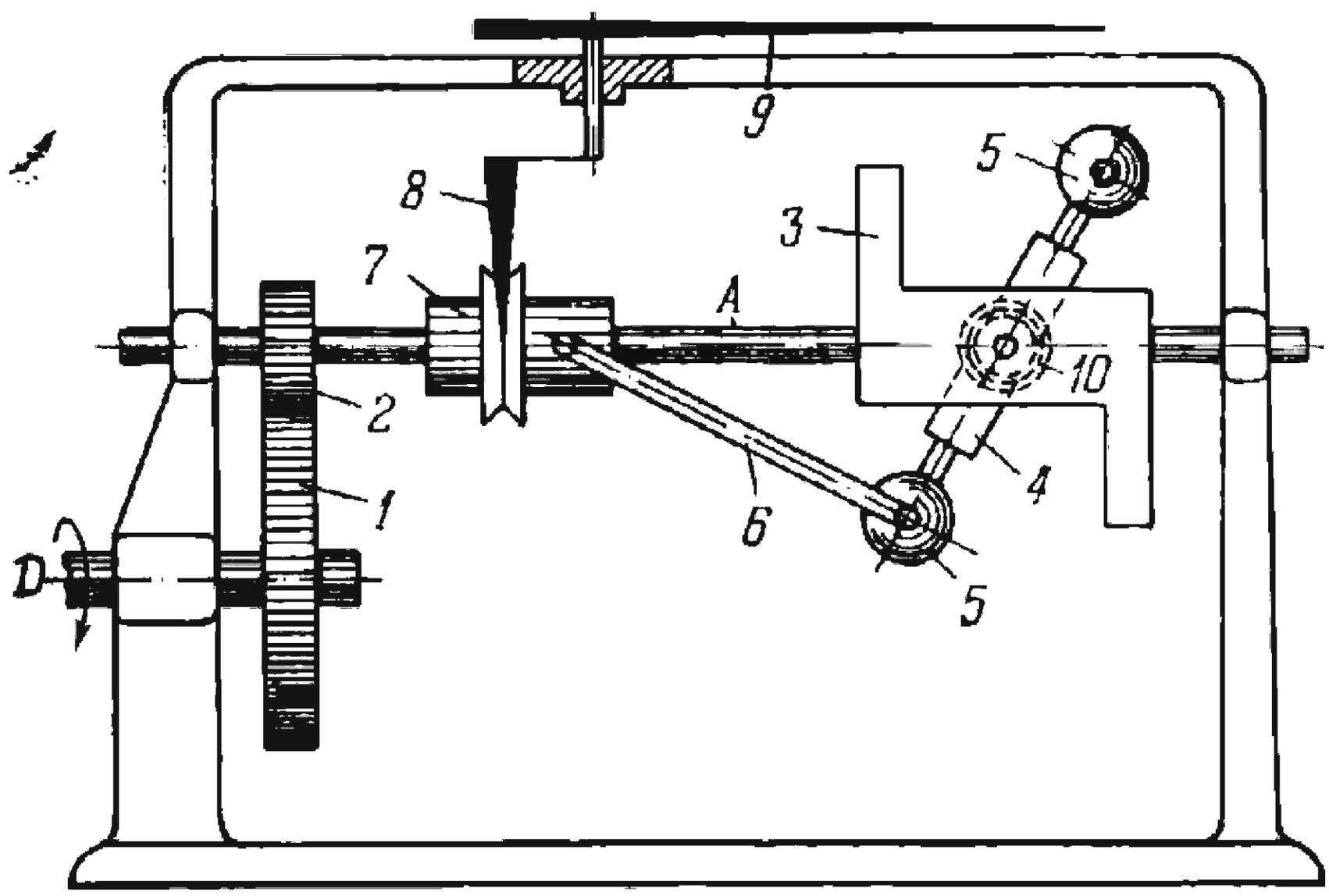

Shaft *A* of the tachometer is driven by the shaft whose speed is to be measured through shaft *D* and gears *1* and *2*. Lever *4* with weights *5* is pivoted on link *3* which is keyed on shaft *A*. When shaft *A* rotates, the moment of the centrifugal forces acting on weights *5* tends to turn lever *4* so that connecting rod *6* displaces sleeve *7*, turning crank lever *8* and hand *9*. Hand *9* indicates the angular velocity of the shaft being tested. Spring *10* returns lever *4* with weights *5* to the initial position.

2531	LEVER-GEAR MECHANISM OF A TACHOMETER	LrG M

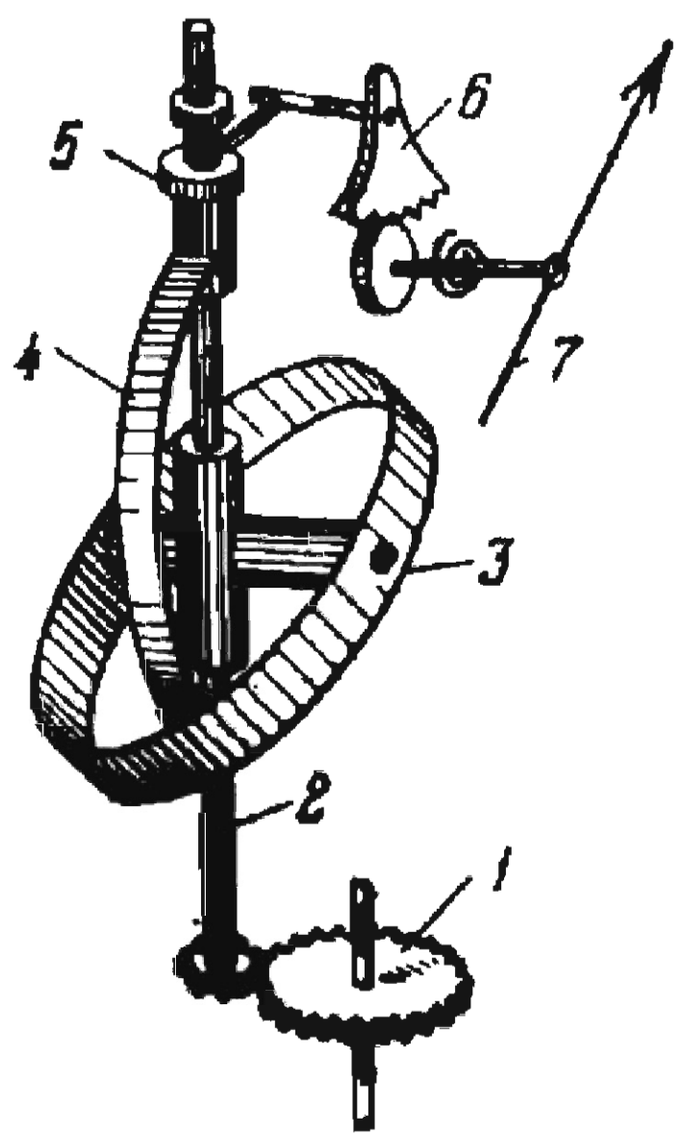

Rotation is transmitted from the shaft whose speed is being measured through gear *1* to shaft *2* on which weight *3* is pivoted. When shaft *2* rotates, weight *3* tends to turn to the position perpendicular to the axis of the tachometer. This distorts flat spring *4* which moves sleeve *5*, turning segment gear *6* and hand *7* to indicate the angular velocity of the shaft being tested.

2532	LEVER-GEAR MECHANISM OF A CENTRIFUGAL TACHOMETER	LrG M

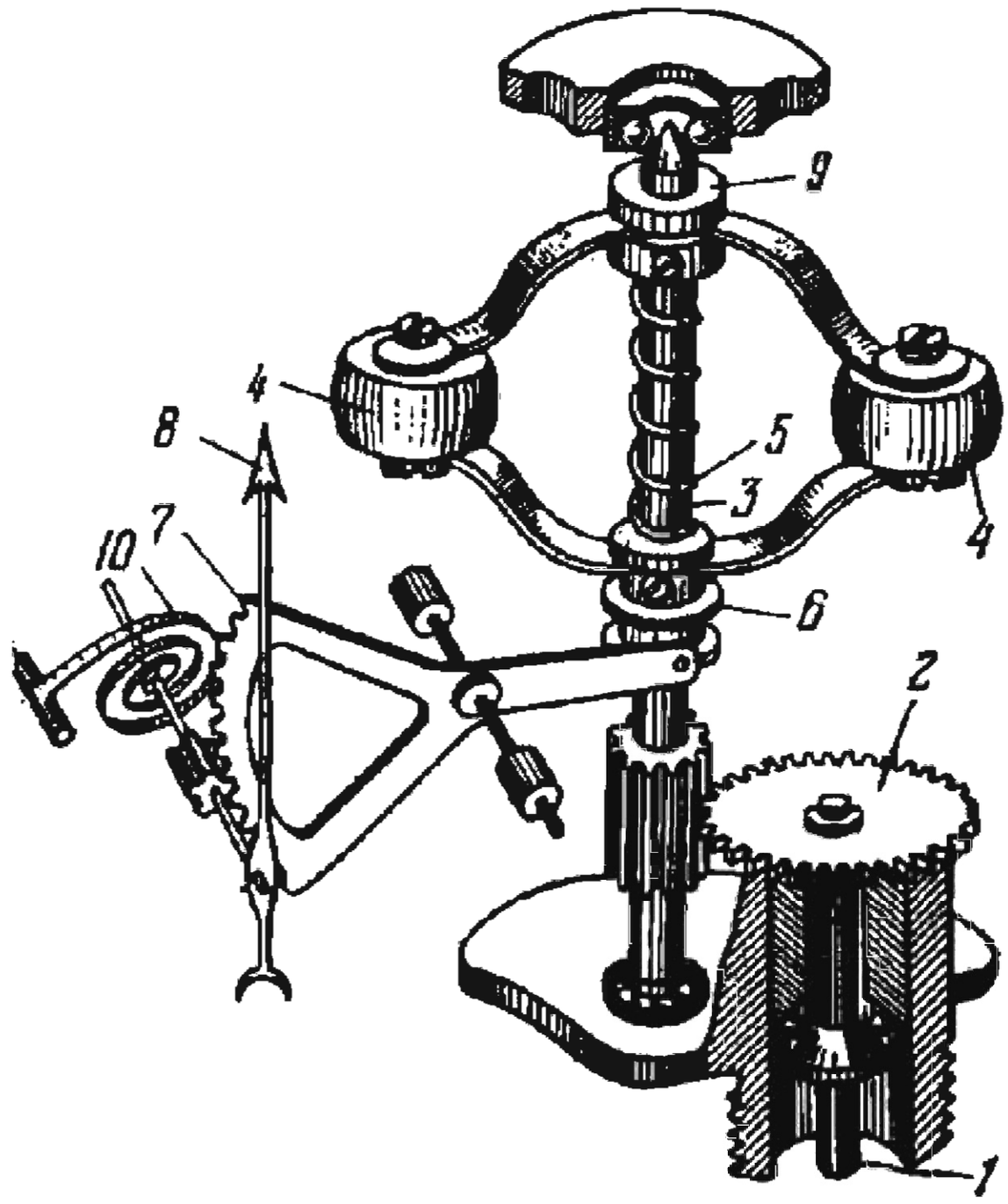

Rotation is transmitted from the shaft whose speed is to be measured through shaft *1* and gear *2* to shaft *3*. When shaft *3* rotates, the centrifugal force acting on weights *4* spreads them so that spring *5* is compressed. The displacement of sleeve *6* along shaft *3* turns segment gear *7* and hand *8* which indicates the rotational speed. Sleeve *9* is rigidly clamped on shaft *3*. Hair spring *10* eliminates backlash in the links of the mechanism.

2533	LEVER-GEAR PISTON MACHINE MECHANISM	LrG PM

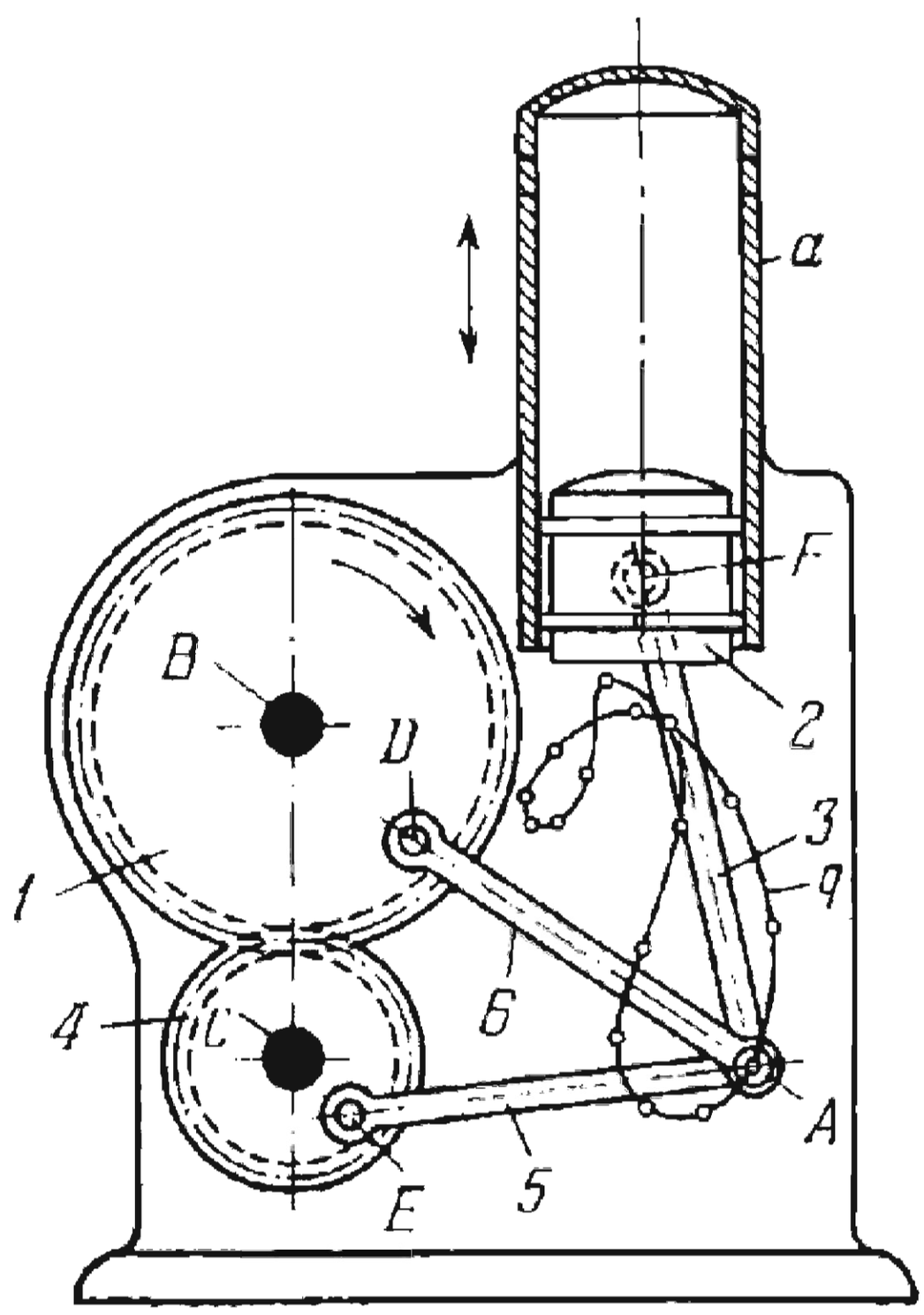

Gear *1* rotates about fixed axis *B* and meshes with gear *4* which rotates about fixed axis *C*. Links *6* and *5* are connected by turning pairs *D* and *E* to gears *1* and *4*, and by turning pairs *A* to connecting rod *3*. Connecting rod *3* is connected by turning pair *F* to piston *2* which slides in fixed cylinder *a*. The dimensions of the links comply with the conditions: $r_1 = 2r_4$ and $\overline{AD} = \overline{AE}$, where r_1 and r_4 are the pitch radii of gears *1* and *4*. When driving gear *1* rotates, point *A* describes complex connecting-rod curve *q*, and piston *2* reciprocates with two strokes of different length to each revolution of gear *1*.

2534	LEVER-GEAR PISTON MACHINE MECHANISM	LrG PM

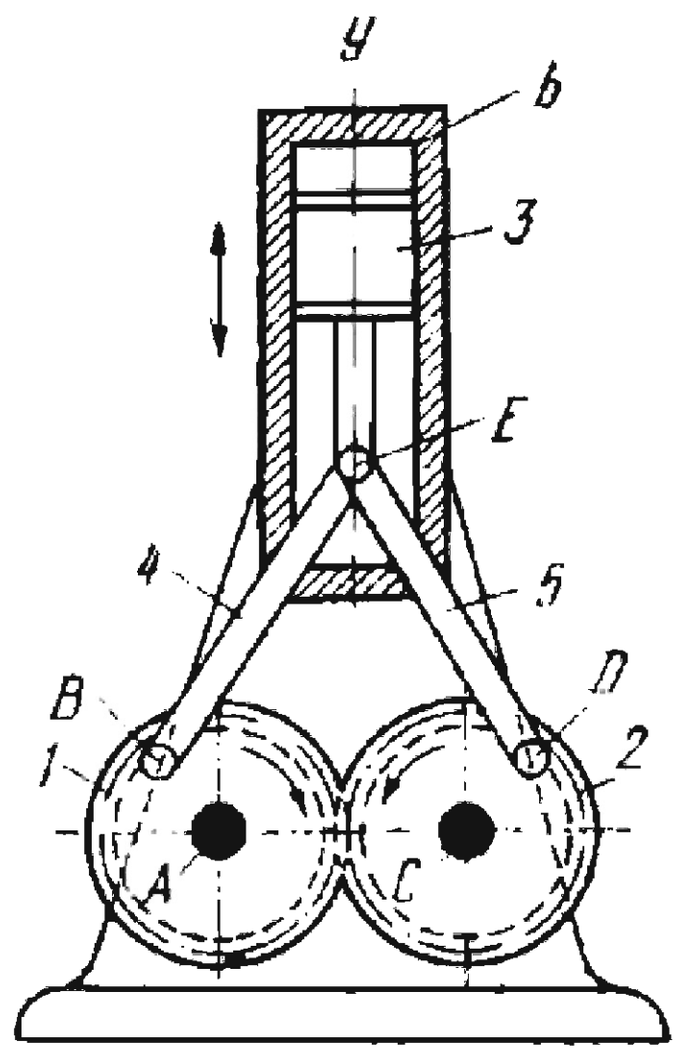

Meshing gears *1* and *2*, of equal pitch diameter, rotate about fixed axes *A* and *C*. Connecting rods *4* and *5* are connected by turning pairs *B* and *D* to gears *1* and *2*, and by turning pairs *E* to piston *3* which slides in fixed cylinder *b*. The dimensions of the links comply with the conditions: $\overline{AB} = \overline{CD}$ and $\overline{BE} = \overline{DE}$. The angles made by lines *AB* and *CD* with axis *y* of the cylinder are equal and symmetrically located. When either gear *1* or *2* rotates, piston *3* reciprocates along axis *y*. If gears *1* and *2* are of equal mass, as are connecting rods *4* and *5*, there will be no pressure on the cylinder walls due to forces of inertia of the links.

2535	LEVER-GEAR SIFTER MECHANISM WITH ELASTIC LINKS	LrG VM

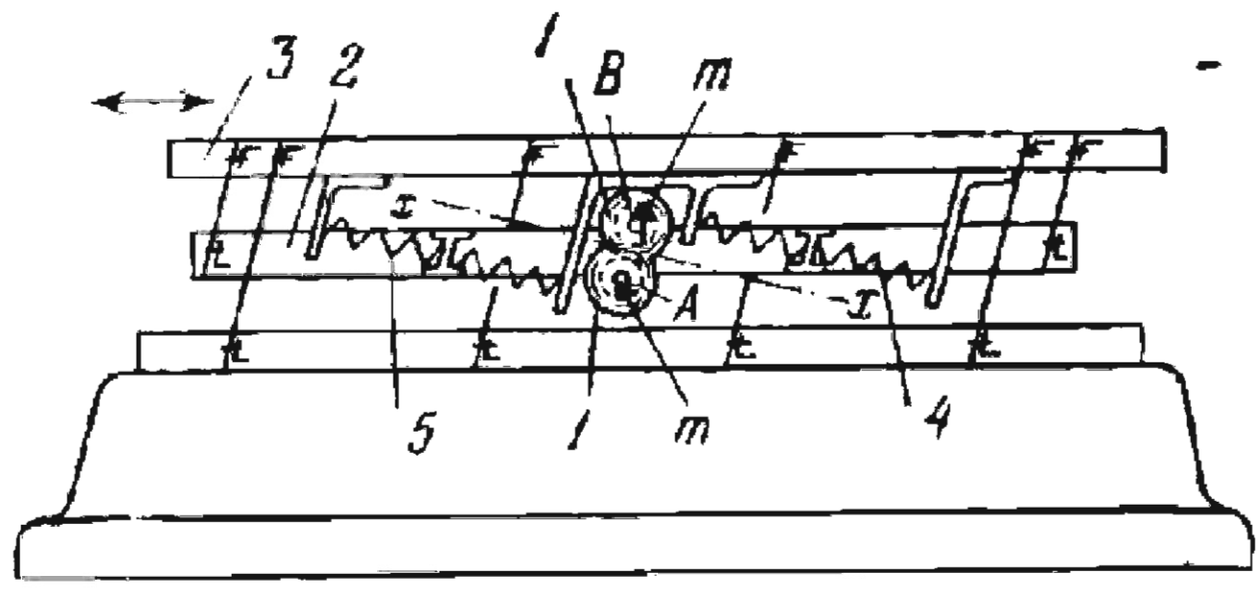

Frame *2* carries two meshing gears *1* of equal pitch diameter which rotate about axes *A* and *B*. Frame *2* is connected to frame *3* by springs *5* and *4*. Unbalanced masses *m* are mounted at equal angles φ to axis *x-x* on gears *1* so that the resultant disturbing force is along axis *x-x* and equals $P = m\omega^2 r \cos\varphi$, where ω is the angular velocity of gears *1* and *r* is the distance from axes *A* and *B* of rotation to the centres of mass of weights *m*. When gears *1* rotate, frames *2* and *3* have vibratory motions.

2536	SLIDER-GEAR MECHANISM OF A VIBRATION TABLE	LrG VM

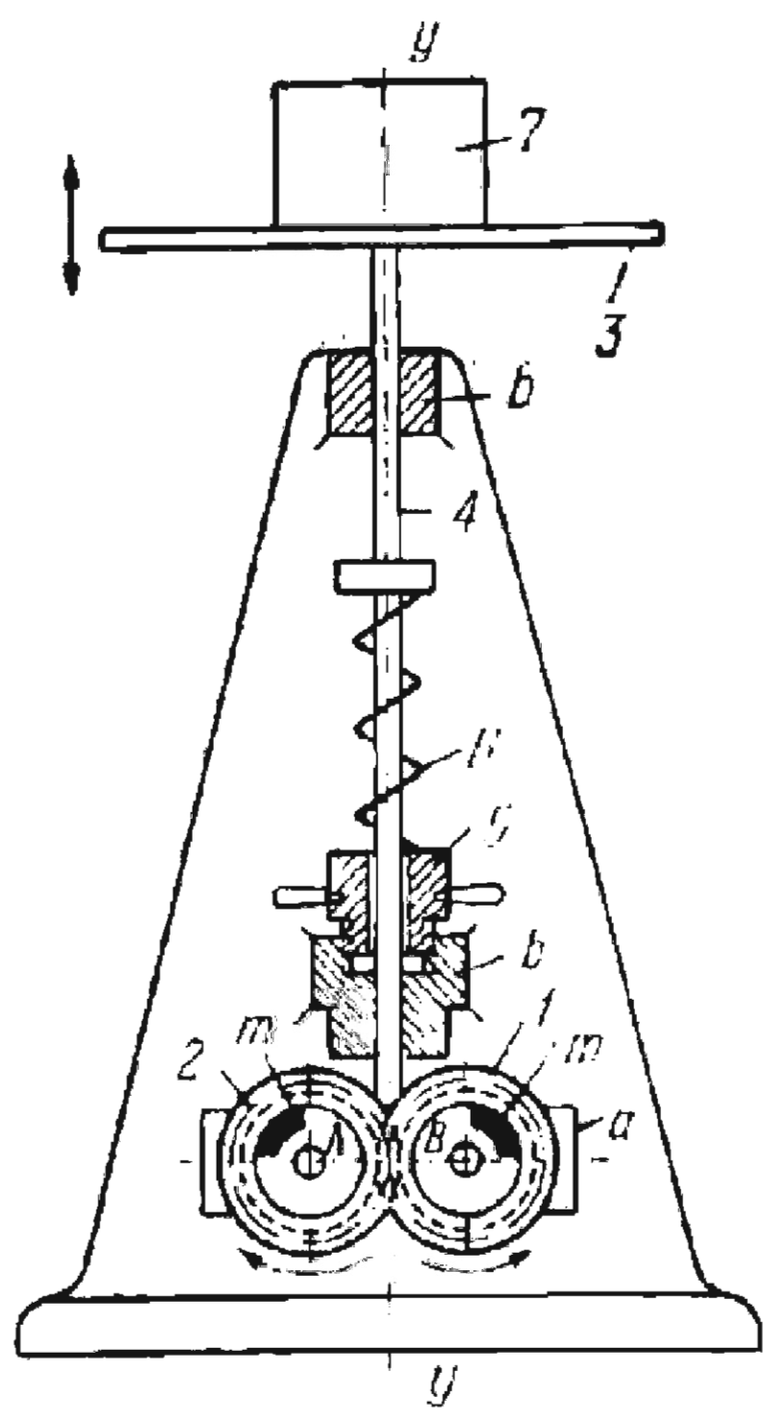

Meshing gears *1* and *2*, of equal pitch diameter, rotate about axes *B* and *A* of frame member *a* which is rigidly attached to bar *4*. Bar *4* reciprocates in guides *b-b*. Equal masses *m* are mounted at equal angles φ to axis *y-y* on gears *1* and *2*. When gears *1* and *2* rotate at uniform velocity, the force developed along axis *y-y* of bar *4* is $P = 2m\omega^2 r \cos\varphi$, where ω is the angular velocity of gears *1* and *2*, and *r* is the distance from axes *A* and *B* of rotation to the centres of mass of weights *m*. Force *P* vibrates table *3* and item *7* being tested on the table. Screw device *5* enables the tension of spring *6* to be adjusted.

2537	LEVER-GEAR TONGS MECHANISM WITH GEAR SEGMENTS	LrG GC

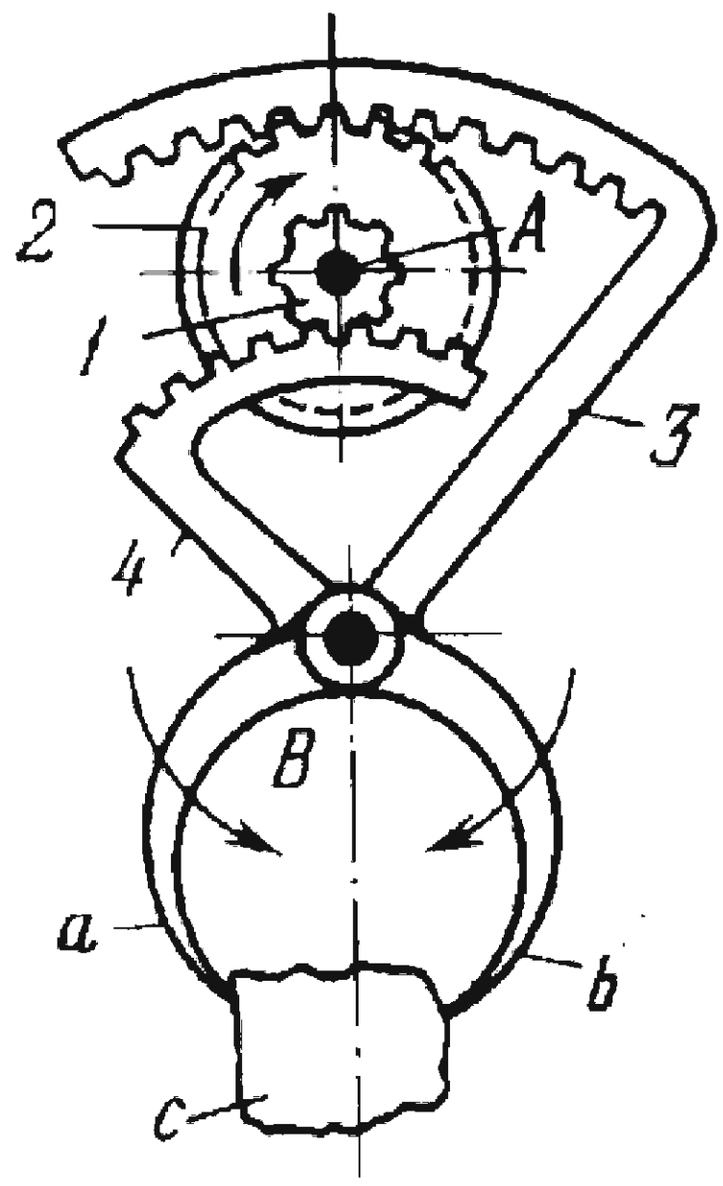

Gears *1* and *2* are rigidly attached together, rotate about fixed axis *A* and mesh with gear segments *4* and *3* which turn about fixed axis *B*. When gears *1* and *2* are rotated clockwise, tong jaws *a* and *b* of gear segments *3* and *4* grip object *c*.

2538	USTSOV LEVER-GEAR MECHANISM FOR CLAMPING A BAND	LrG GC

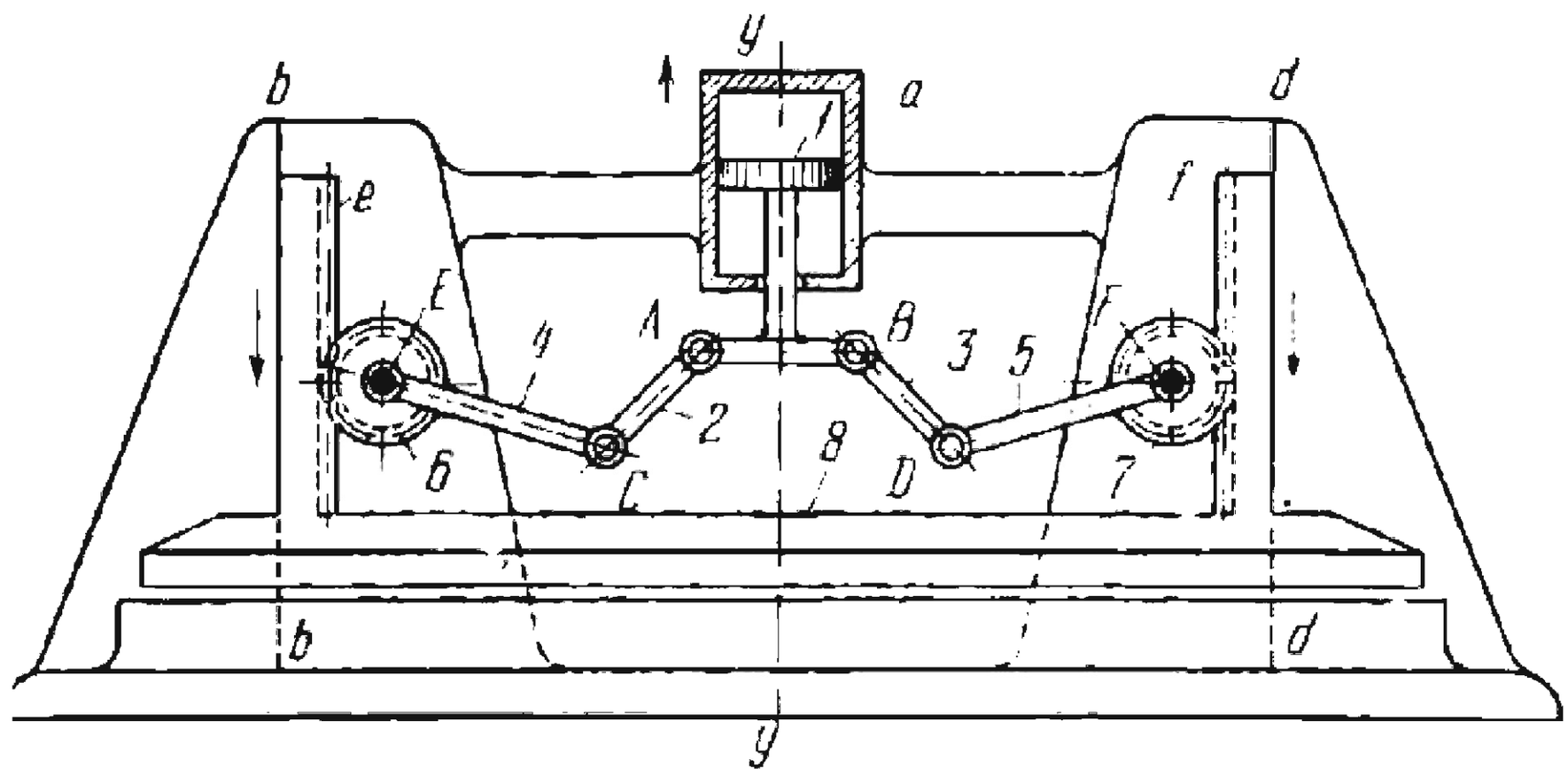

Piston *1* slides along axis *y-y* of fixed cylinder *a* and is connected by turning pairs *A* and *B* to links *2* and *3* which, in turn, are connected by turning pairs *C* and *D* to links *4* and *5*. Links *4* and *5* turn about fixed axes *E* and *F* and have segment gears *6* and *7*, of equal pitch diameter, which mesh with gear racks *e* and *f*. Gear racks *e* and *f* slide along fixed vertical guides *b-b* and *d-d*, and belong to clamping member *8*. The dimensions of the links comply with the conditions: $\overline{AC} = \overline{BD}$ and $\overline{CE} = \overline{DF}$. Points *A* and *B* are symmetrical with respect to axis *y-y*. When piston *1* moves upward, link *8* has downward translational motion along axis *y-y*, clamping the band to the fixed surface.

2539	LEVER-GEAR SAFETY CLUTCH MECHANISM	LrG C

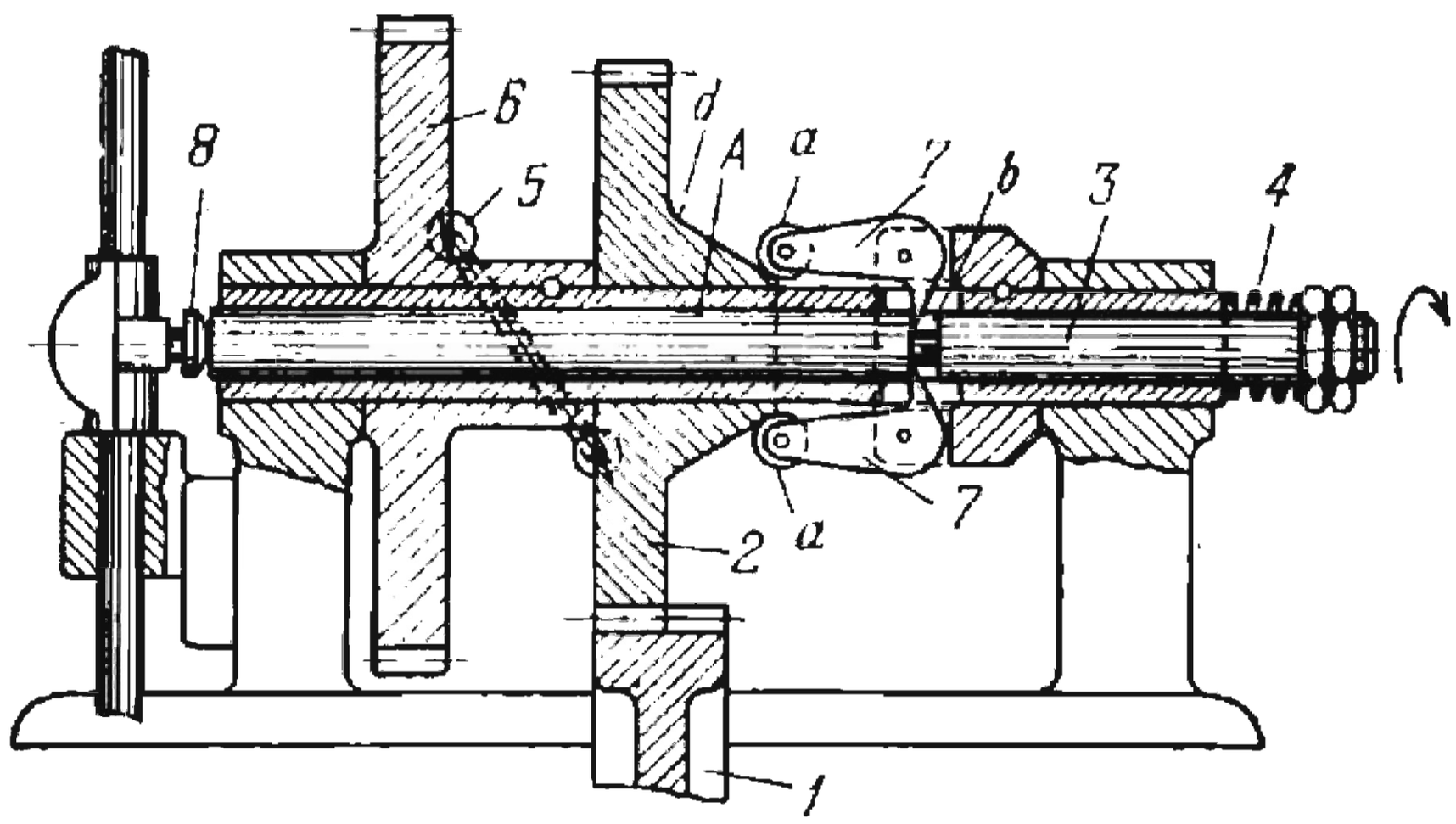

At normal permissible load, torque is transmitted from gear *1* to gear *2*, which can rotate freely and slide along hollow shaft *A*, and then further through bar *5* to gear *6*. Balls at the ends of bar *5* engage corresponding ball sockets in gears *2* and *6*. Plunger *3* slides in hollow shaft *A* and is held in the position shown at normal torque by coil spring *4*. Groove *b* of plunger *3* is engaged by fingers *7* which have rollers *a* at their other end resting on tapered hub *d* of gear *2*. In case of overload, the pressure against the ball ends of bar *5* increases so that the bar pushes gear *2* to the right. At this, tapered hub *d* spreads fingers *7* forcing plunger *3* to the left and compressing spring *4*. Plunger *3* depresses button *8* to stop the machine. When the excessive load is relieved, spring *4* returns the mechanism to the initial position.

2540	LEVER-GEAR CLUTCH MECHANISM FOR INTERMITTENT MOTION	LrG C

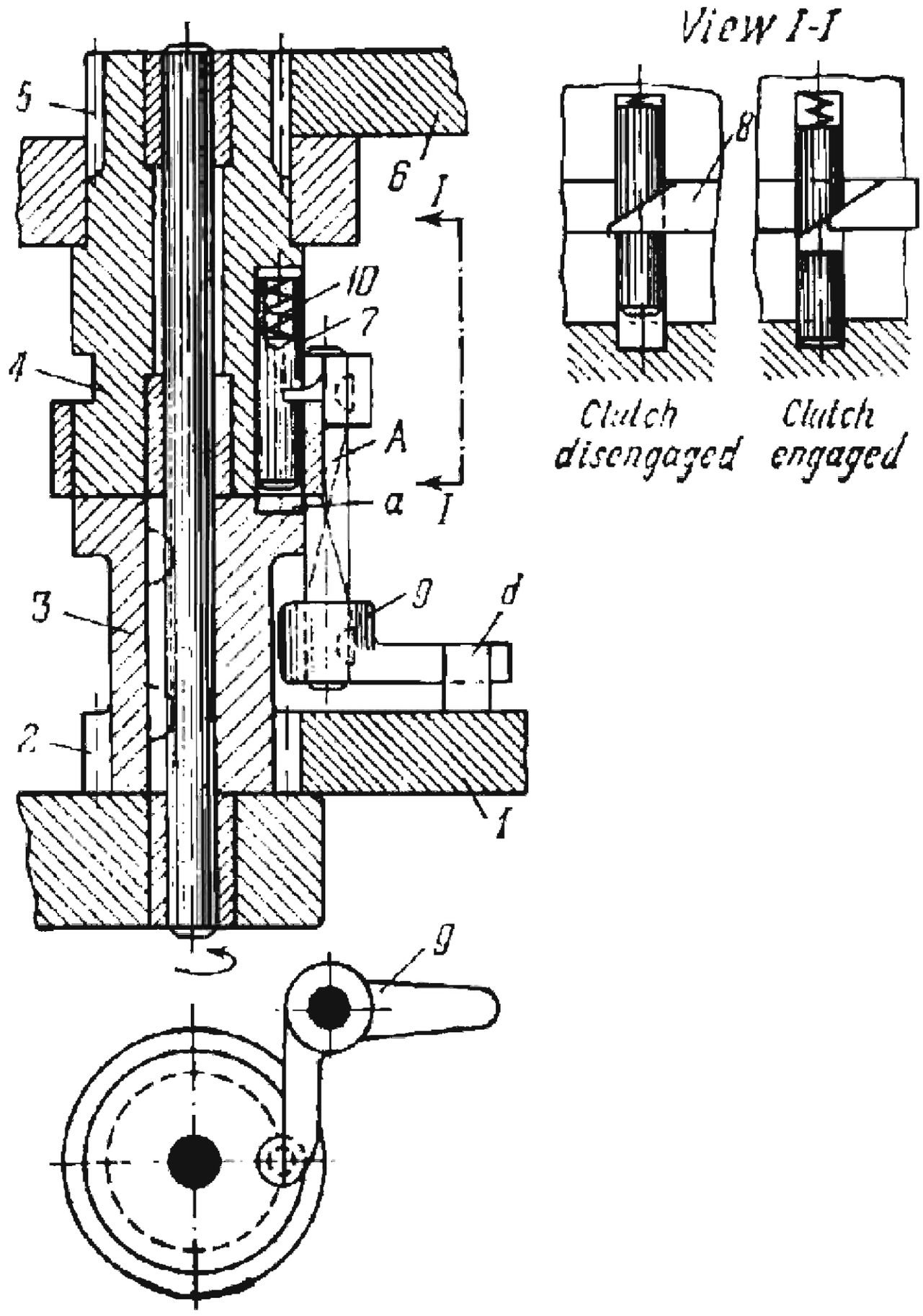

Clutch member *3* is rotated at uniform velocity by gear *1* and pinion *2*. Rotation is transmitted from member *3* to clutch member *4*, pinion *5* and gear *6* when sliding key *7* engages slot *a* in member *3*. Key *7* is kept from sliding downward and engaging the clutch by dog *8* which is keyed with lever *9* on shaft *A*. Shaft *A* turns in a fixed bearing. When gear *1* rotates, pin *d* periodically trips lever *9*, turning it through a certain angle and thereby withdrawing dog *8* so that key *7* drops, due to the action of spring *10*, into slot *a* of clutch member *3*. This engages member *3* to clutch member *4* so that pinion *5* drives gear *6*. When pin *d* has passed lever *9*, a spring (not shown) returns lever *9* and dog *8* to the initial position in which the bevel face of key *7* comes into contact with the bevel face on dog *8* so that key *7* is forced upward out of slot *a* and the clutch members are disengaged.

2541	LEVER-GEAR SWITCHING MECHANISM	LrG SE

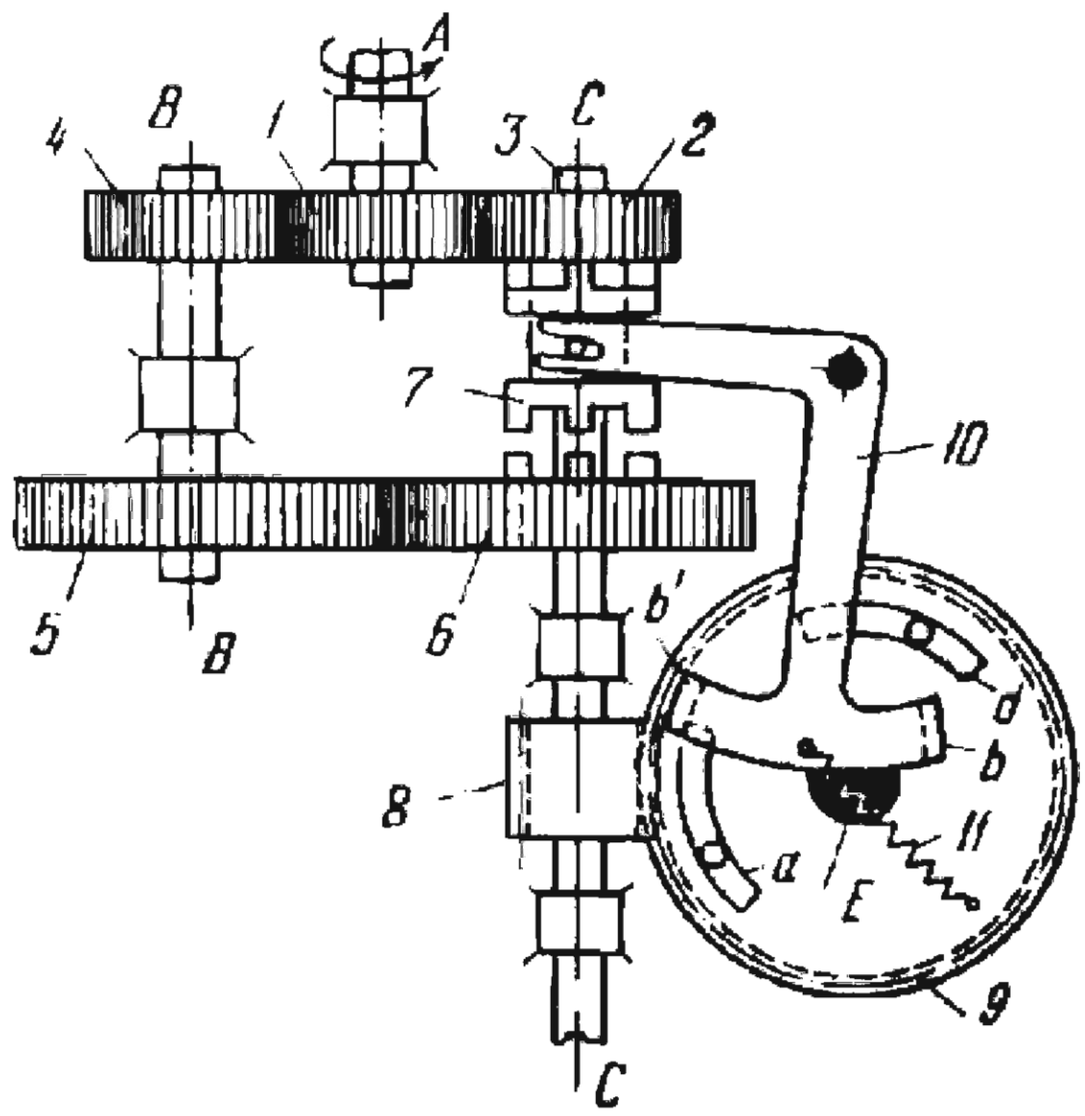

Rotation is transmitted from driving gear *1*, rotating about fixed axis *A*, directly to gear *2*, freely mounted on shaft *3*; and through gears *4* and *5*, rotating about fixed axis *B-B*, to gear *6* which is also freely mounted on shaft *3*. Gears *2* and *6* alternately engage sliding clutch member *7*, which is keyed on shaft *3*, and rotate the shaft in opposite directions. Worm *8* is keyed on shaft *3* and meshes with worm wheel *9* which controls the motion of switching lever *10*. Lever *10* is connected by spring *11* to wheel *9*. Worm wheel *9* rotates about fixed axis *E*, and has two arc-shaped lugs *a* and *d* which can be adjusted. When, in the rotation of worm wheel *9*, lugs *b* and *b'* on lever *10* engage lugs *a* and *d*, lever *10* is stationary. As soon as the lugs run out of engagement, spring *11* shifts lever *10*, sliding clutch member *7* is switched over and shaft *3* is reversed.

2542	SLOTTED-LEVER-GEAR MECHANISM WITH DRIVEN LINK STROKE ADJUSTMENT	LrG LL

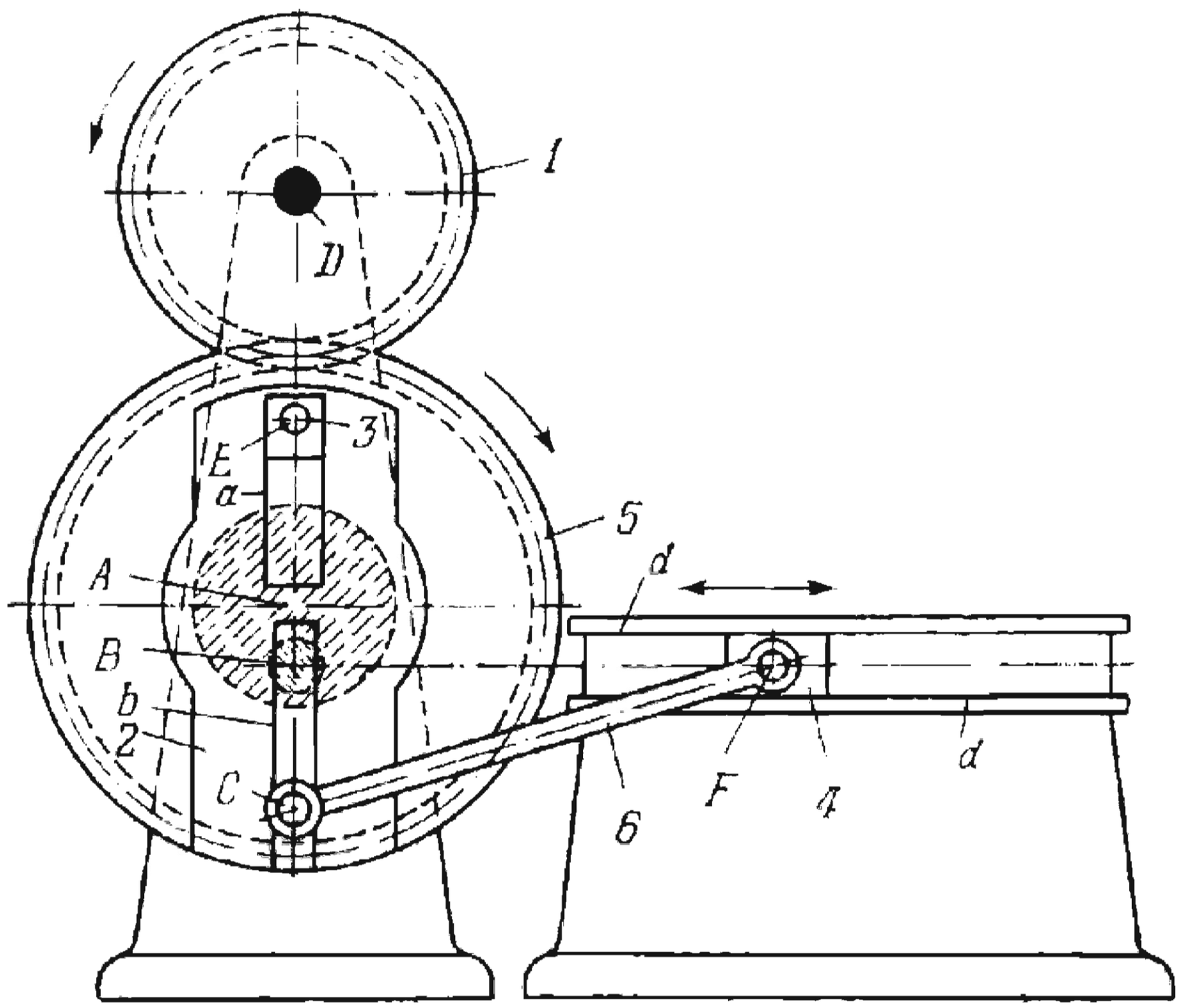

Gear *1* rotates about fixed axis *D* and meshes with gear *5* which rotates about fixed axis *A*. Gear *5* is connected by turning pair *E* to slider *3* which moves in slot *a* of slotted link *2*. Link *2* rotates about fixed axis *B* and is connected by turning pair *C* to connecting rod *6* which, in turn, is connected by turning pair *F* to slider *4*. Slider *4* moves along fixed guides *d-d*. When driving gear *1* rotates at uniform velocity, slotted member *2* rotates at nonuniform velocity and slider *4* reciprocates with unequal average velocities of its forward and return strokes. The stroke of slider *4* can be varied by adjusting the axis of turning pair *C* along slot *b* of link *2* and clamping it in the required position.

2543	LEVER-GEAR MECHANISM OF A DOUGH KNEADING MACHINE	LrG FD

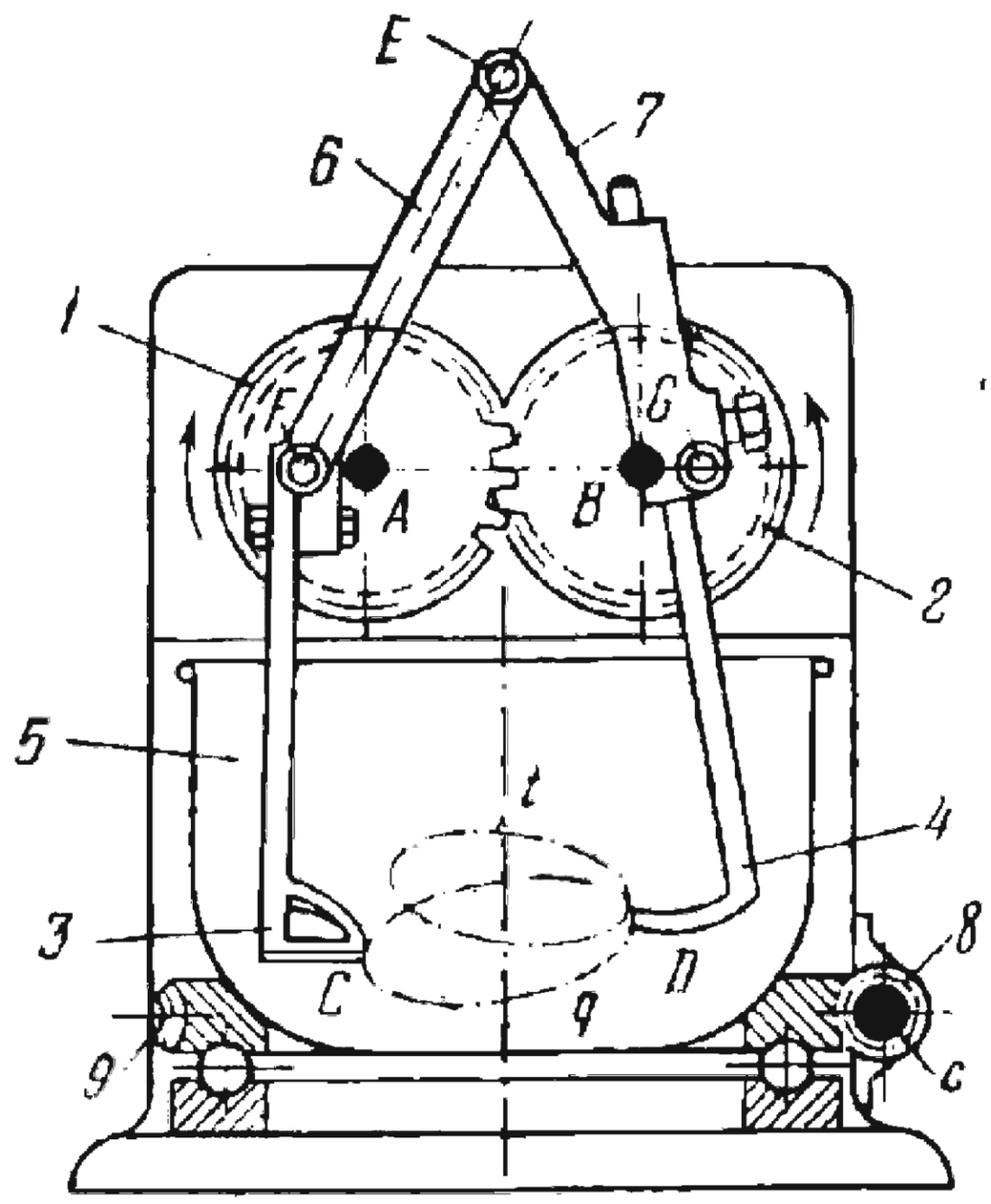

Meshing gears *1* and *2*, of equal pitch diameter, rotate about fixed axes *A* and *B*. Links *6* and *7* are connected by turning pairs *F* and *G* to gears *1* and *2* and to each other by turning pair *E*. Points *C* and *D* of kneading members *3* and *4*, rigidly attached to links *6* and *7*, describe complex connecting-rod curves *q* and *t*. The dimensions of the links comply with the condition: $\overline{FE} = \overline{GE}$. In the initial position, lines *AF* and *BG* coincide with line *AB* and are in opposite directions. Kneading member *4* can be clamped in various positions with respect to link *7*. Additional rotary motion of vat *10* is obtained by worm *8* which rotates about fixed axis *C* and meshes with worm wheel *9* of vat *5*.

2544	SLOTTED-LEVER-GEAR PLANETARY MECHANISM OF AN OVAL-TURNING DEVICE	LrG FD

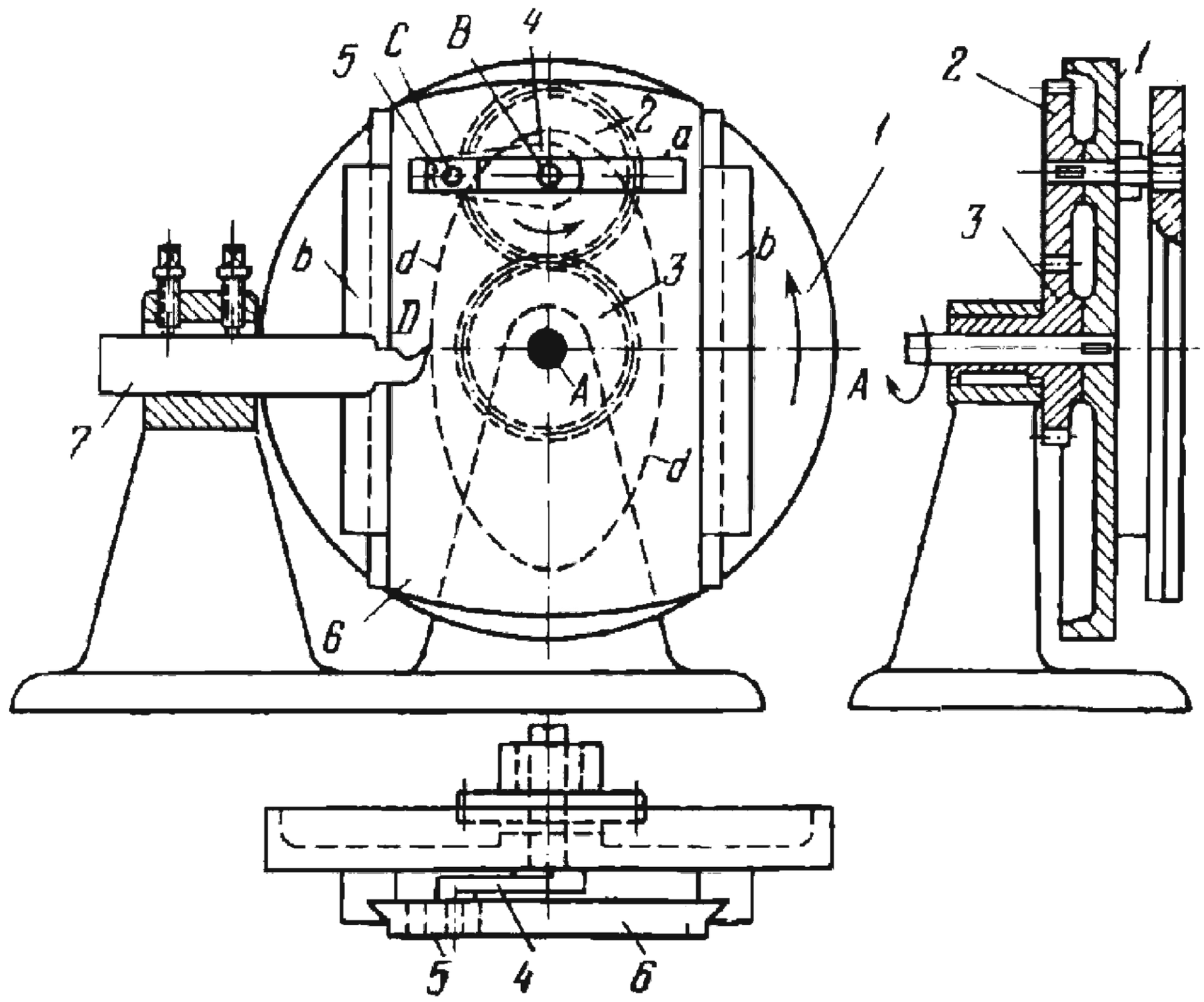

Faceplate *1* rotates about fixed axis *A* and is connected by turning pair *B* to planet gear *2* which meshes with fixed sun gear *3*. Crank *4* is rigidly attached to gear *2* and is connected by turning pair *C* to slider *5* which moves along slot *a* of plate *6*. Plate *6* moves along guides *b-b* of faceplate *1*. The axes of slot *a* and guides *b-b* are perpendicular to each other. Gears *2* and *3* are of equal pitch diameters. When faceplate *1* rotates, points of plate *6* describe oval curves. If a workpiece is clamped to plate *6*, nose *D* of single-point lathe tool *7* turns the workpiece to the shape of oval *d*.

2545	LEVER-GEAR MECHANISM FOR SMOOTHING A WRAPPER OVER THE TAPERED ENDS OF CIGARS	LrG FD

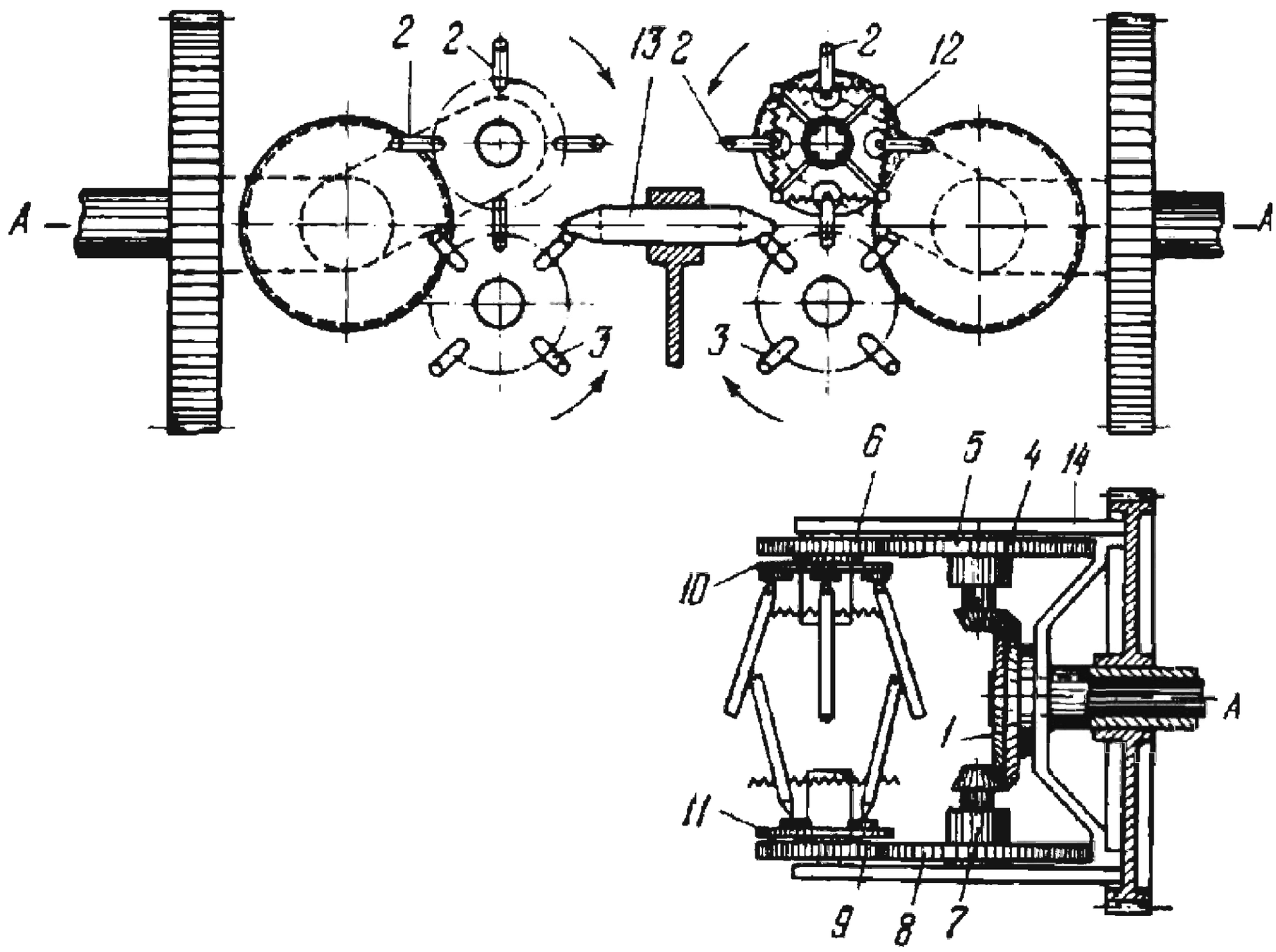

When bevel gear *1* rotates about fixed axis *A*, groups of round rods *2* and *3*, four in each group, rotate as shown by the arrows, being driven through bevel pinions *4* and *7*, and gears *5*, *6*, *8* and *9*. Rods *2* and *3* have ball ends mounted in spherical sockets in which the rods are free to pivot. These sockets are mounted on plates *10* and *11* which are rigidly attached to gears *6* and *9*. Each group of four round rods are held in their neutral position by a system of eight springs *12*. When plates *10* and *11* rotate, round rods *2* and *3* come into contact with the wrapping on clamped cigar *13* and smooth and crease the wrapping over the tapered ends of the cigar. Bracket *14* carries the bearings of gears *4*, *5*, *6*, *7*, *8* and *9*, and rotates about axis *A*. Thus the rods not only smooth the wrapping lengthwise but radially as well around the ends of the cigar.

2546	LEVER-GEAR MECHANISM FOR WINDING TYPEWRITER RIBBON ON A REEL	LrG FD

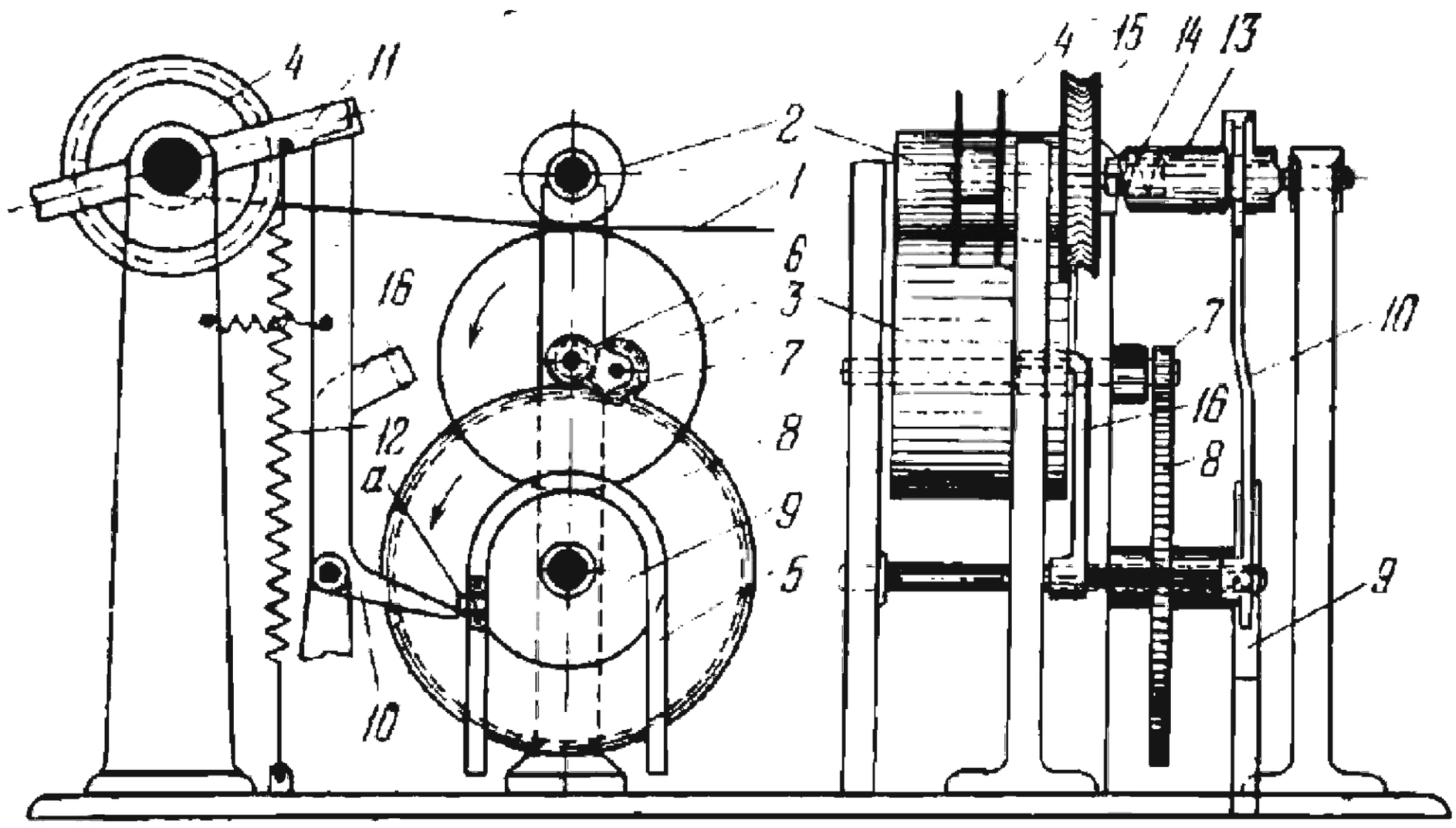

Typewriter ribbon *1* is fed by rollers *2* and *3* to rotating reel *4*. Motion is transmitted from roller *3* to chain *5* through gears *6*, *7* and *8* and sprocket *9*. Dog *a* of chain *5* is set up to the amount of ribbon to be wound. When reel *4* is full, dog *a* engages lever *10* and turns it clockwise. This releases lever *11* which is turned clockwise by spring *12*. As a result, clutch *13* is disengaged by spring *14* from rotating disk *15*, and reel *4* stops. Feeding of ribbon *1* also ceases because braking lever *16* stops roller *3*.

2547	LEVER-GEAR PLANETARY SAW MECHANISM	LrG FD

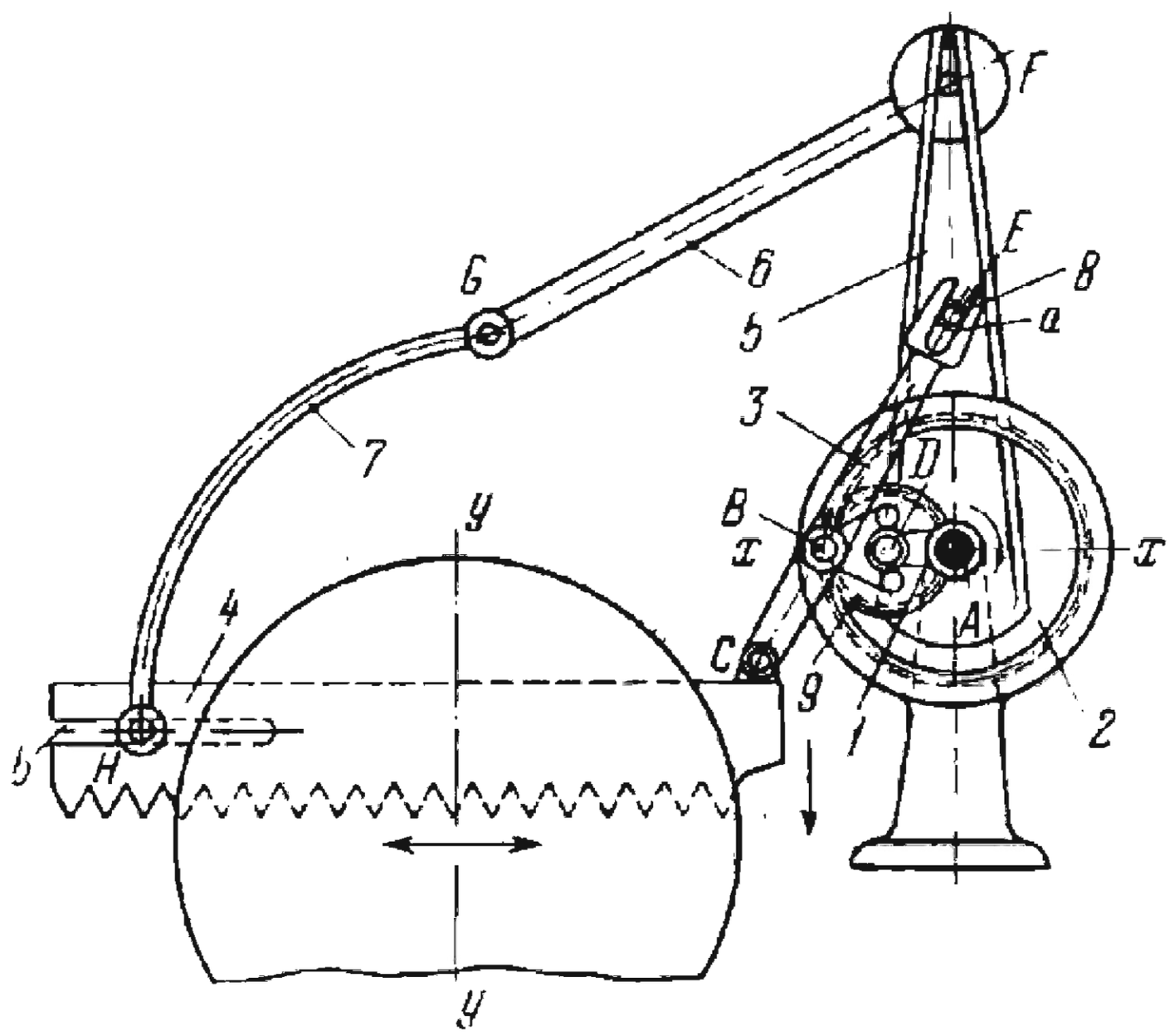

Carrier *1* rotates about fixed axis *A* and is connected by turning pair *D* to planet gear *9* which meshes with fixed internal sun gear *2*. Planet gear *9* is connected by turning pair *B* to sliding link *3*. Link *3* is connected by turning pair *C* to saw blade *4* and by sliding pair *E* to slider *8* which moves along slot *a* of link *3*. Slider *8* turns about axis *E* of link *5* which is connected by turning pair *F* to link *6*. Link *6* is connected by turning pair *G* to link *7* whose end *H* slides in slot *b* of saw blade *4*. The pitch radius of gear *2* is twice that of gear *9*. As a result, point *B*, lying on the pitch circle of gear *9*, travels in a straight line along axis *x-x* passing through point *A*. When carrier *1* rotates, saw blade *4* reciprocates parallel to axis *x-x*. The saw blade is fed downward, along axis *y-y*, by turning link *5* about axis *A*.

2548	LEVER-GEAR SHUTTLE MECHANISM	LrG FD

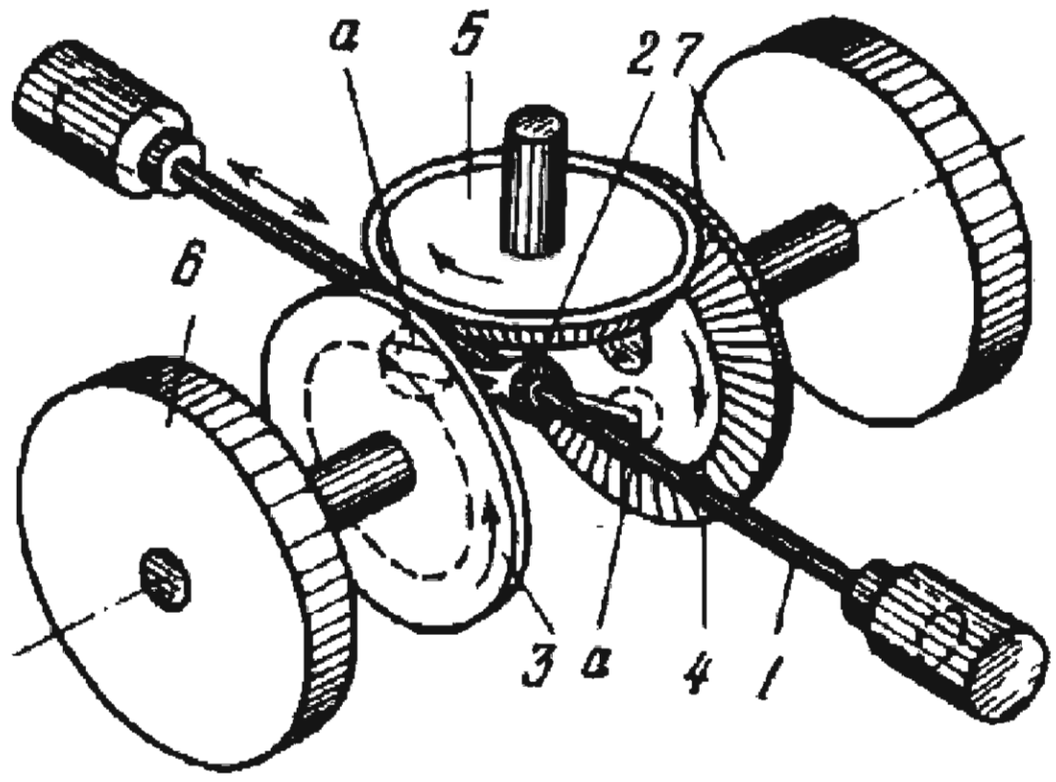

Rotation of bevel gear *5* is transmitted to bevel gears *3* and *4* which rotate at equal angular velocities in opposite directions. At this, the centre of shuttle *2*, which turns about rod *1* and is connected to gears *3* and *4* by ball-and-socket joints *a*, reciprocates together with rod *1*. The driving link may also be rod *1* whose reciprocation is converted into rotation. Flywheels *6* and *7* enable the mechanism to pass through its extreme points (dead centres).

2549	LEVER-GEAR MECHANISM FOR CHECKING TRACTOR GEARBOX COVERS	LrG FD

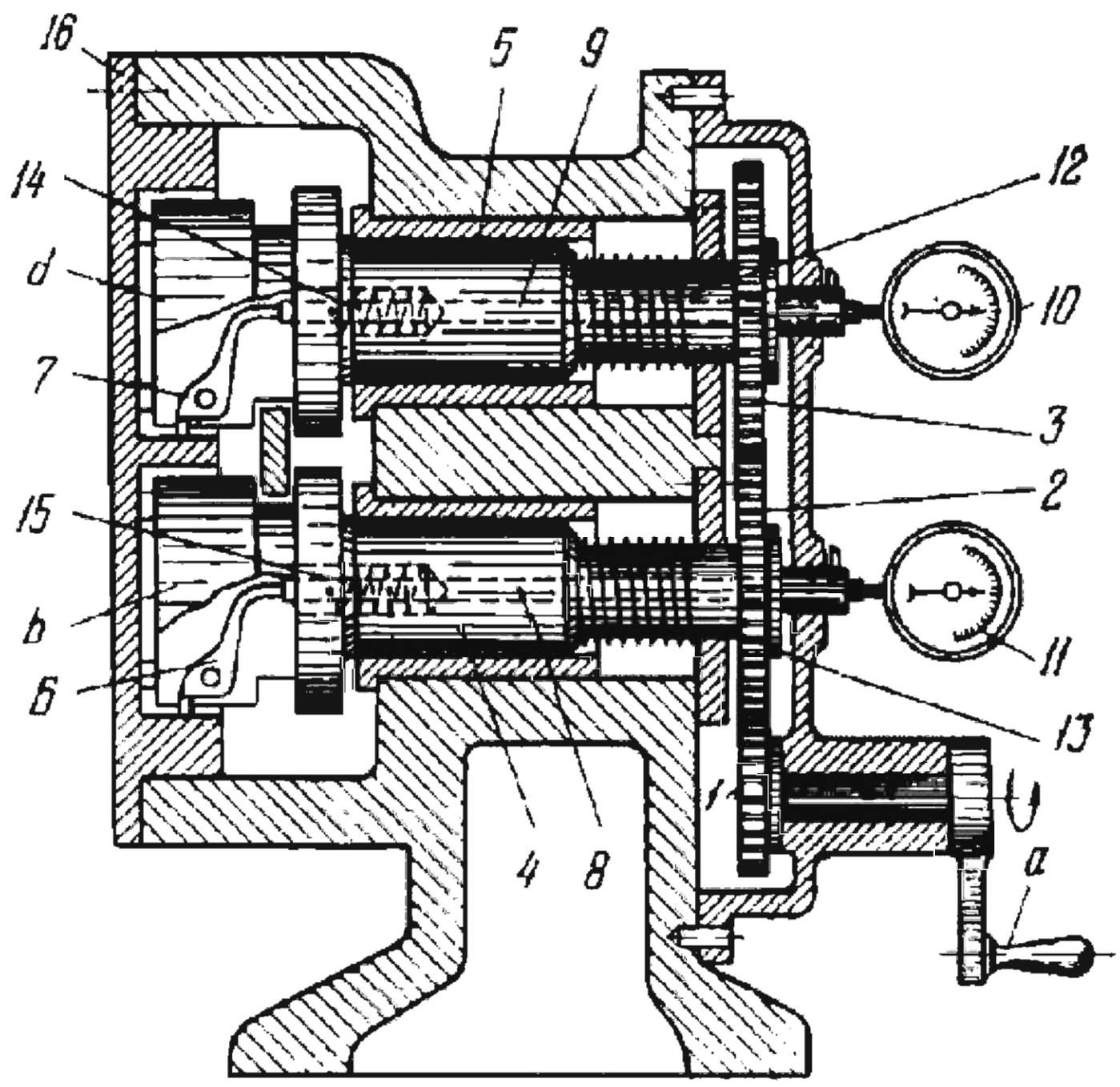

When crank handle *a* is rotated, motion is transmitted to bars *4* and *5* through meshing gears *1*, *2* and *3*. Disks *b* and *d* at the left-hand ends of bars *4* and *5* have slots in which levers *6* and *7* are mounted. If the dimensions in the bores of gearbox cover *16* deviate from the required values, levers *6* and *7* transmit the deviation through pins *8* and *9*, passing through holes in the bars, to the contact points of dial indicators *11* and *10*. Springs *12*, *13*, *14* and *15* hold the contact points of levers *7* and *6* against the surfaces being checked.

2550	LEVER-GEAR MECHANISM OF A MICROSCOPE	LrG FD

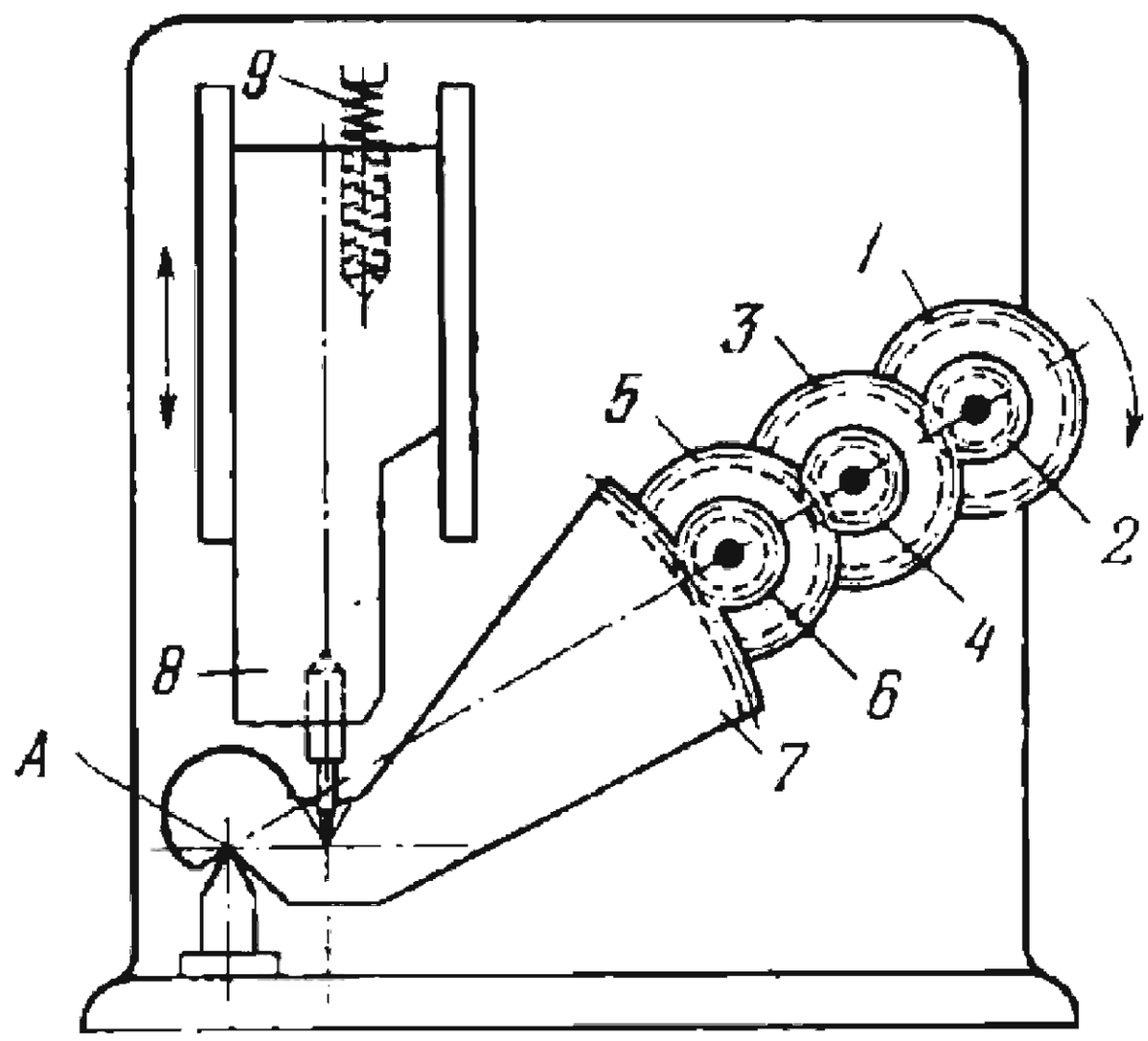

Rotation of gear *1* is transmitted through gears *2*, *3*, *4*, *5* and *6* to gear segment *7*, which is supported on and turns about fixed knife-edge *A*. Turning motion of gear segment *7* is converted into translational motion of link *8*. Spring *9* eliminates backlash in the gearing. To prevent the force of spring *9* from leading to unintentional downward motion of link *8*, gear *6* has a friction washer (not shown) which counterbalances the force of spring *9* by means of a frictional torque.

2561	LEVER-GEAR MECHANISM OF A PAPER LENGTH METER	LrG FD

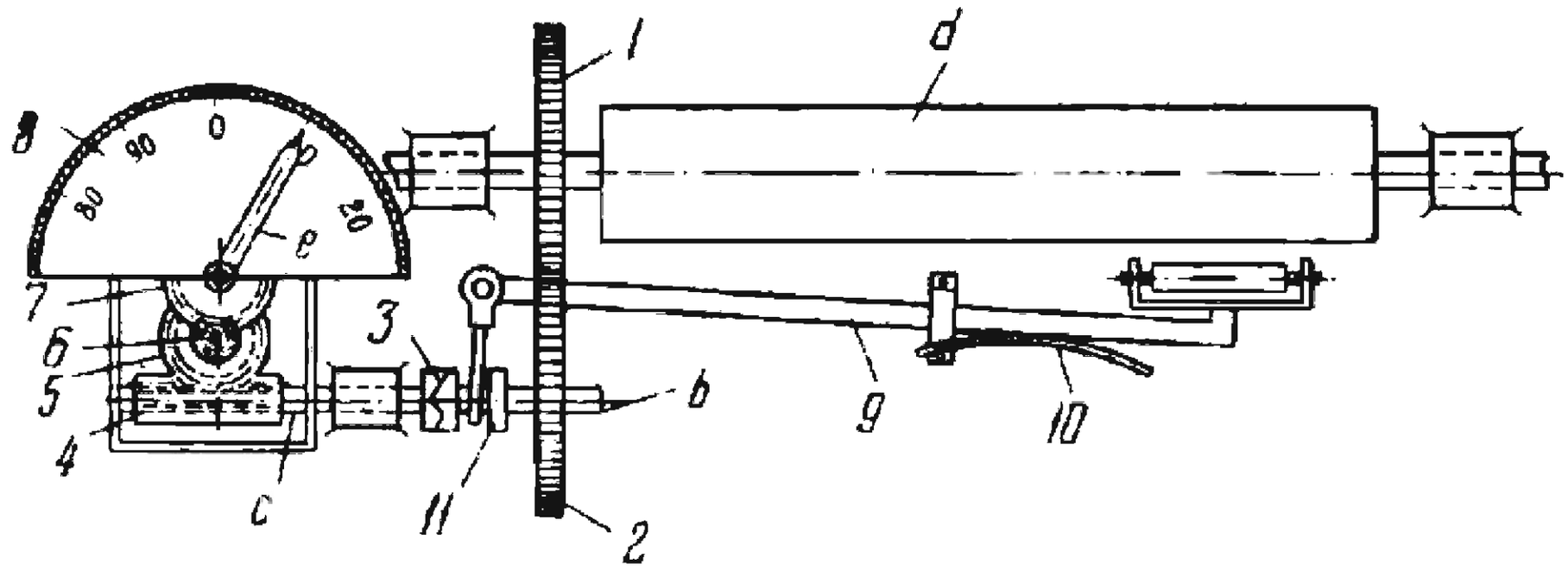

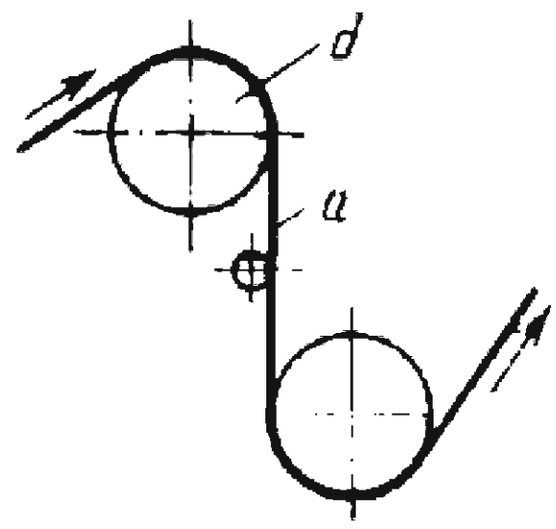

As paper strip *a* passes over measuring roll *d*, it rotates the roll and gear *1* which is rigidly attached to roll *d*. From gear *1* rotation is transmitted through gear *2* to shaft *b*. When clutch *3* is engaged, rotation is transmitted further to shaft *c* and worm *4* which is keyed on shaft *c*. Worm *4* drives worm wheel *5* and gears *6* and *7*. This turns hand *e* on meter dial *8*. When the paper strip tears, lever *9* is raised by spring *10* and it disengages clutch *11*, stopping the meter.

2552	LEVER-GEAR MECHANISM FOR MAINTAINING THE LEVEL OF MOLTEN METAL IN A LINOTYPE	LrG FD

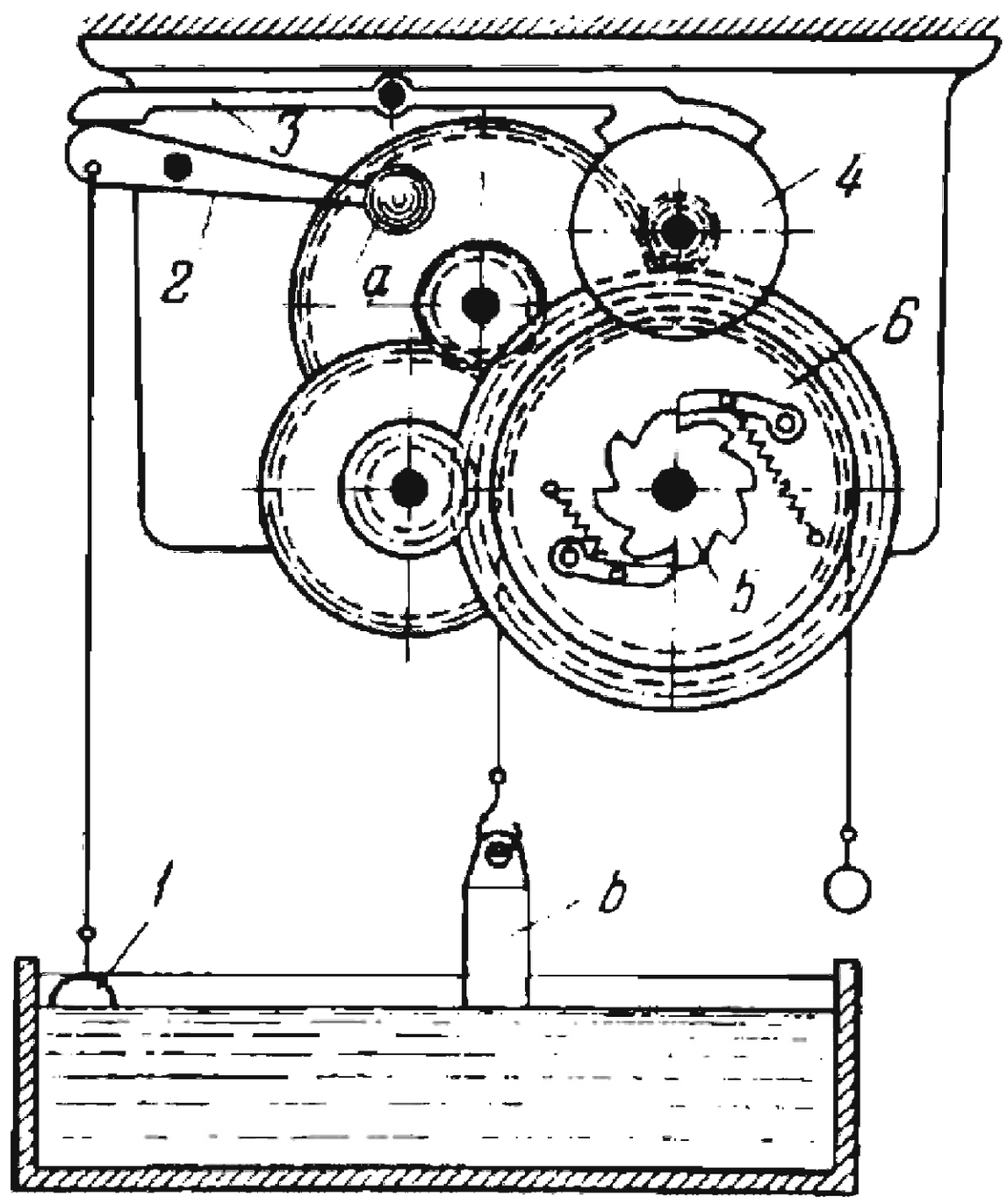

When the molten metal is at the proper level in the bath, float *1* is at a height at which link *2* tends to turn clockwise by the action of weight *a* and its left end forces lever *3* with its brake shoe against drum *4*, thereby braking the drum. Through a train of gears and ratchet wheel *5*, drum *4* is linked to chain sprocket *6*. Ingot *b* of type-metal hangs from a chain running over sprocket *6*. When the bath is at the proper level, the weight of ingot *b*, tending to turn sprocket *6*, is counterbalanced by the friction force on brake drum *4*. As the level drops, float *1* descends and lifts weight *a* of link *2*. Then the brake shoe of lever *3* releases drum *4*, enabling ingot *b* to sink into the bath and melt, thereby replenishing the metal in the bath.

2553 LEVER-GEAR MECHANISM OF A RECIPROCATING PRINTING ROLL

LrG FD

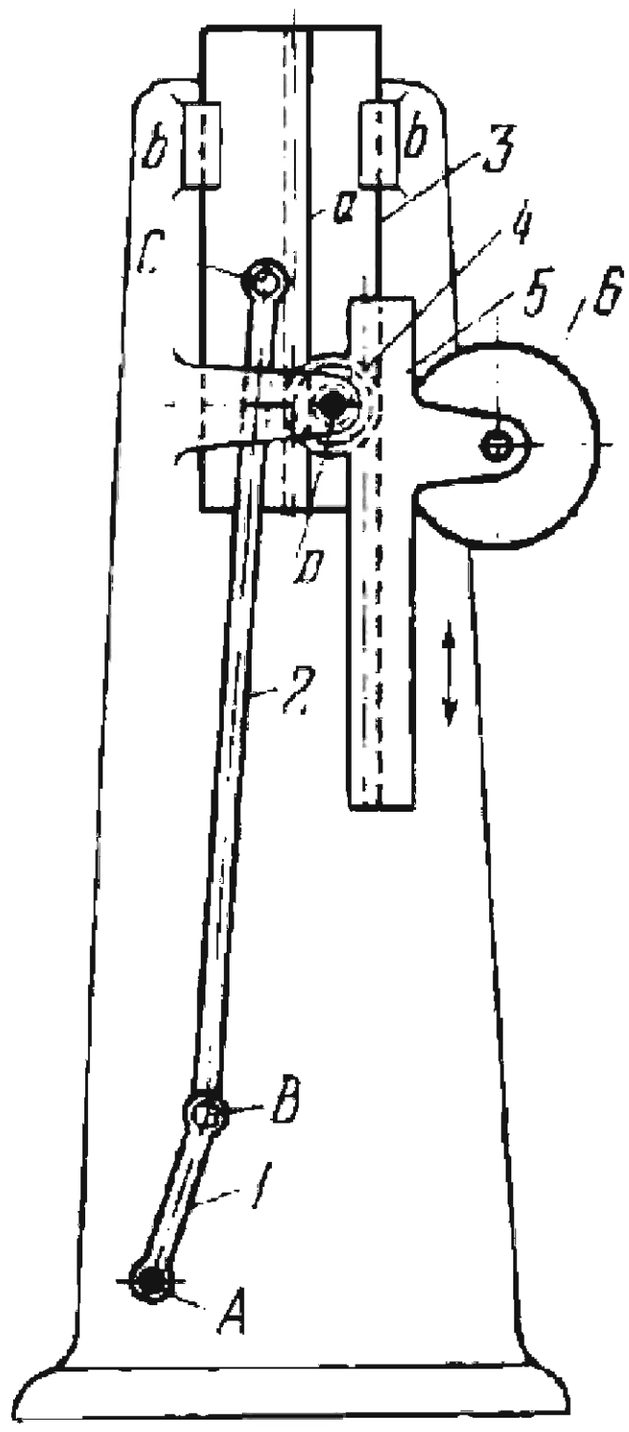

Crank *1* rotates about fixed axis *A* and is connected by turning pair *B* to connecting rod *2* which, in turn, is connected by turning pair *C* to press bed *3*. Bed *3* slides in fixed guides *b-b* and has gear rack *a* which meshes with pinion *4*. Pinion *4* rotates about fixed axis *D* and meshes with a rack of carriage *5* on which printing roll *6* is mounted. When crank *1* rotates, carriage *5* reciprocates.

2554 LEVER-GEAR MECHANISM OF A SEWING MACHINE PLUNGER

LrG FD

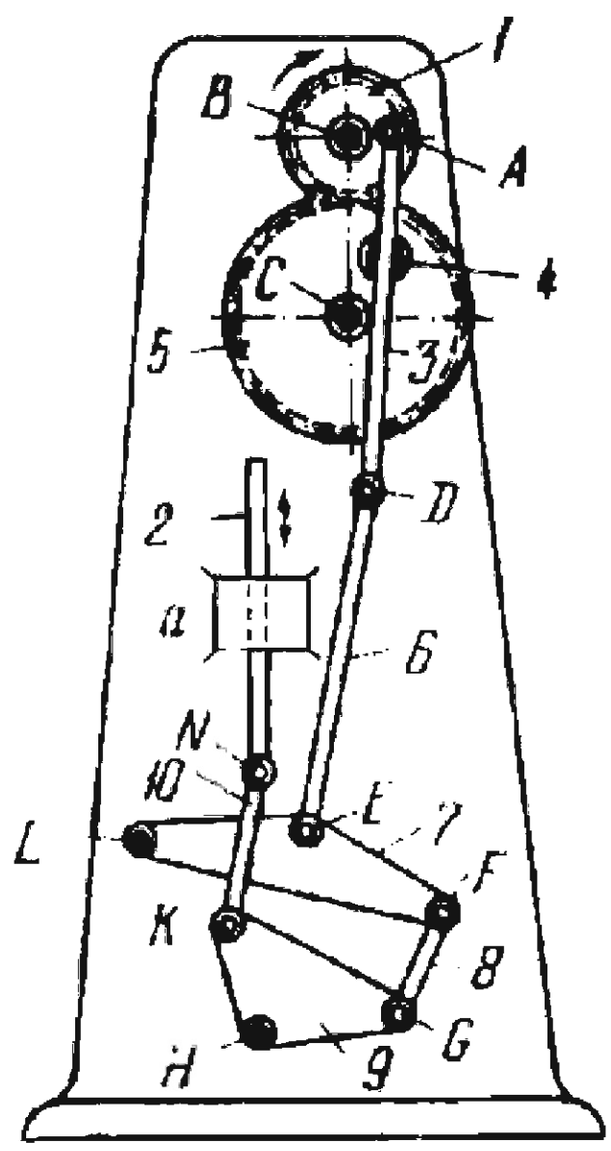

Gear *1* rotates about fixed axis *B* and meshes with gear *5* which rotates about fixed axis *C*. Gear *1* is connected by turning pair *A* to link *3* which slides in guide *4*. Guide *4* is connected by a turning pair to gear *5*. Link *6* is connected by turning pairs *D* and *E* to link *3* and to link *7* which turns about fixed axis *L*. Link *8* is connected by turning pairs *F* and *G* to link *7* and to link *9* which turns about fixed axis *H*. Link *10* is connected by turning pairs *K* and *N* to link *9* and to plunger *2* which slides in fixed guide *a*. When gear *1* rotates, plunger *2* reciprocates.

2555	LEVER-GEAR MECHANISM OF A PRINTING DEVICE	LrG FD

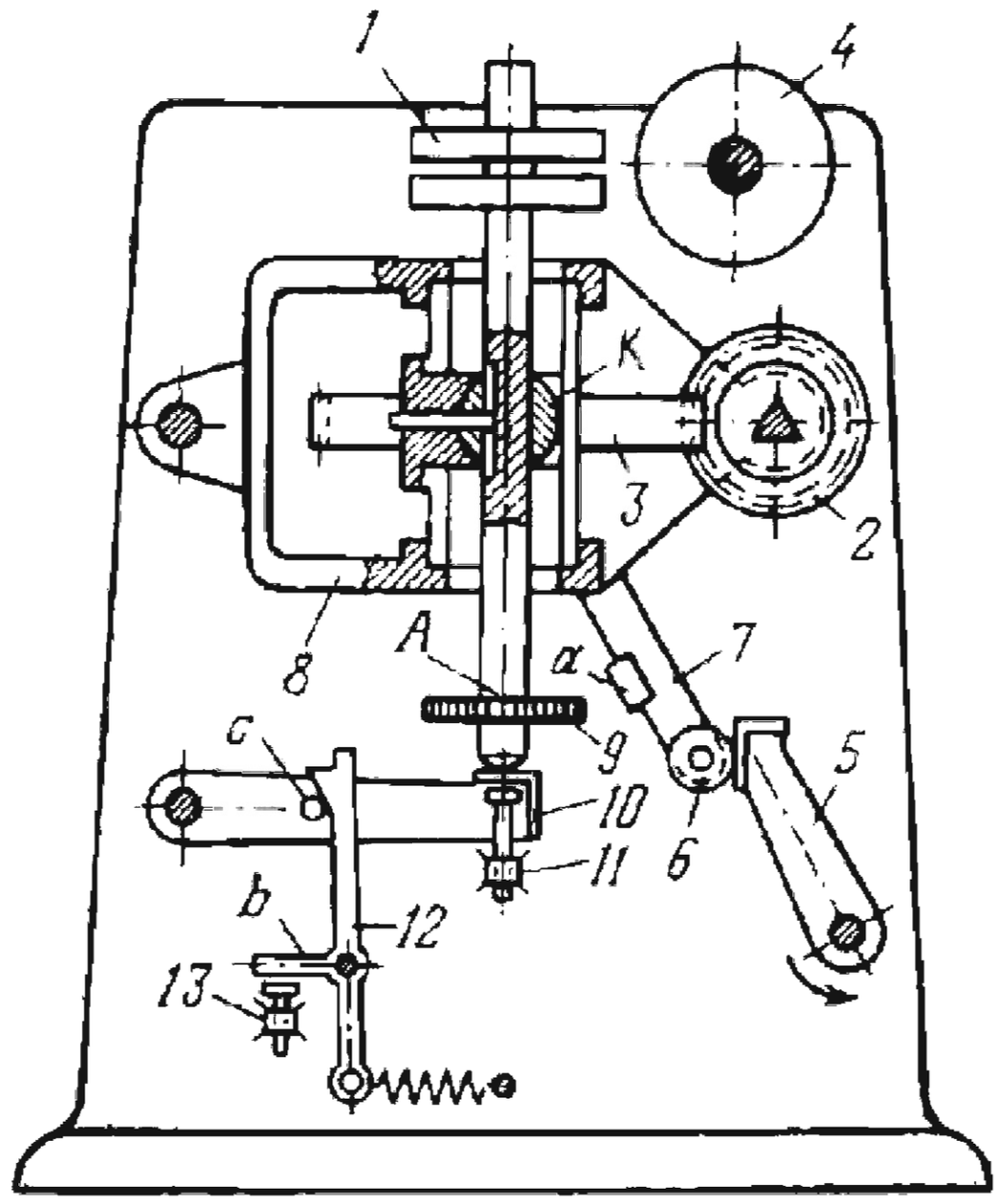

Type wheel *1* is turned by means of spiral gears *2* and *3*. When the required letter on type wheel *1* faces roll *4*, it is printed by motion of the wheel toward the roll. Link *5* rotates counterclockwise and engages roller *6* of link *7* which is pivoted on carriage *8*. This turns link *7* so that its tooth *a* enters a tooth space of gear *9*. Then shaft *A* turns about fixed axis *K* and type wheel *1* approaches roll *4*. Link *10* supports shaft *A*, and is raised by pin *11* and held in the raised position by pawl *12*. When pin *13* pushes lug *b* of pawl *12*, the pawl turns and releases pin *c* so that link *10* drops and type wheel *1* is returned by gravity to its normal position.

2556	LEVER-GEAR PAPER SHEET FEEDING MECHANISM	LrG FD

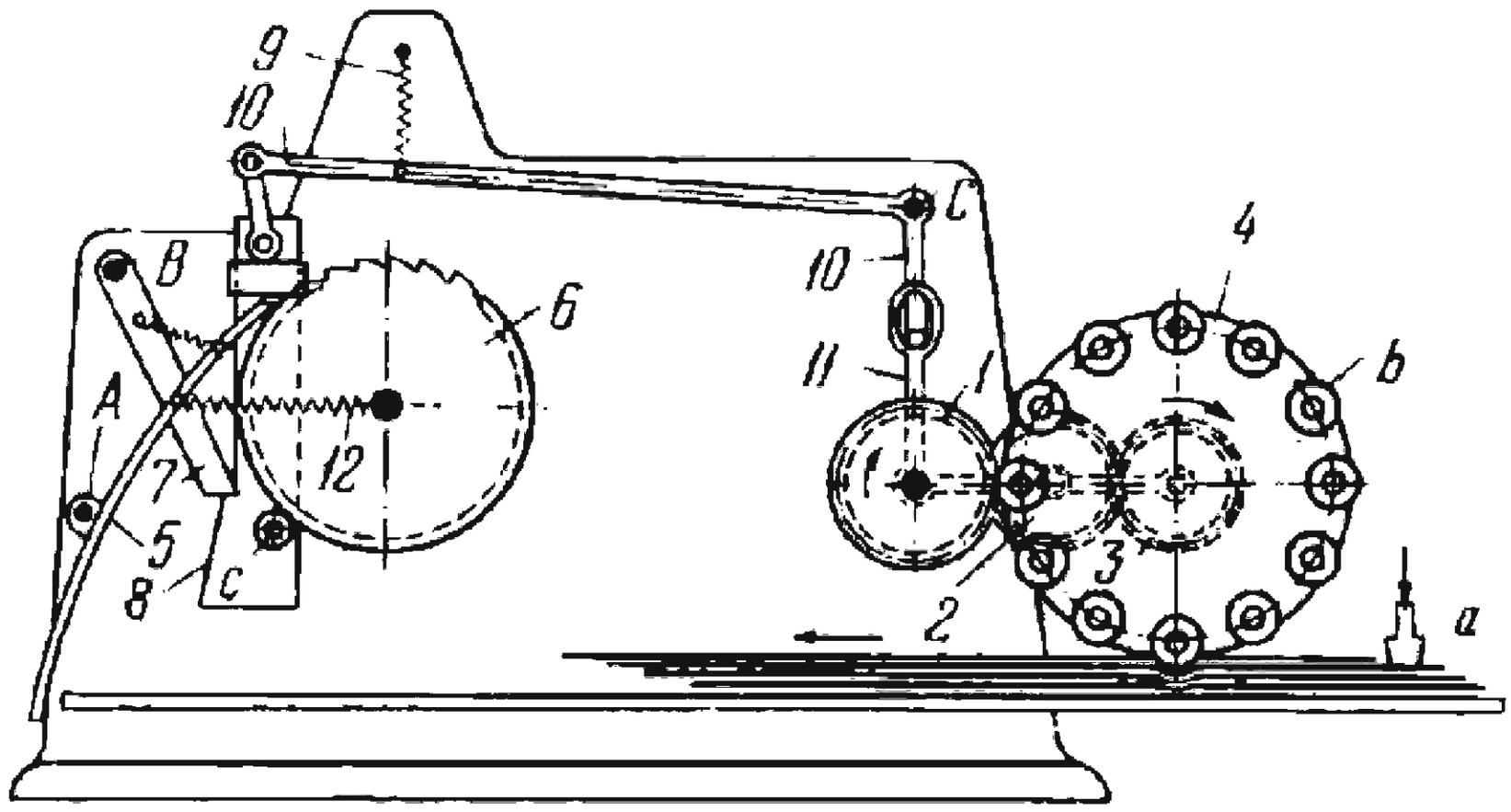

The rotation of gear *1* is transmitted through intermediate gear *2* to gear *3* which is keyed with pin wheel *4* on a common shaft. As pin wheel *4* rotates,its rolls *b* strike the sheets of paper and move them to the left, up to stop *5*. To ensure that a single sheet is moved, the sheets are stacked with each sheet shifted with respect to the one below it. The whole stack, except the top sheet,is held by brake shoe *a*. The force exerted by the moving sheet turns link *5* about axis *A* so that its upper end engages a tooth of ratchet wheel *6*. Ratchet wheel *6* presses link *5* so that link *7* turns about fixed axis *B*. This releases link *8* which is pulled upward by spring *9*. Then lever *10* turns together with yoke *11* and raises pin wheel *4*. Keyed to a common shaft with ratchet wheel *6* is an eccentric (not shown) which actuates roller *c* of link *8*, pushing it downward and thereby lowering pin wheel *4*. Link *7* is held to the base by spring *12*.

2557	LEVER-GEAR MECHANISM FOR MILLING CAM SLOTS	LrG FD

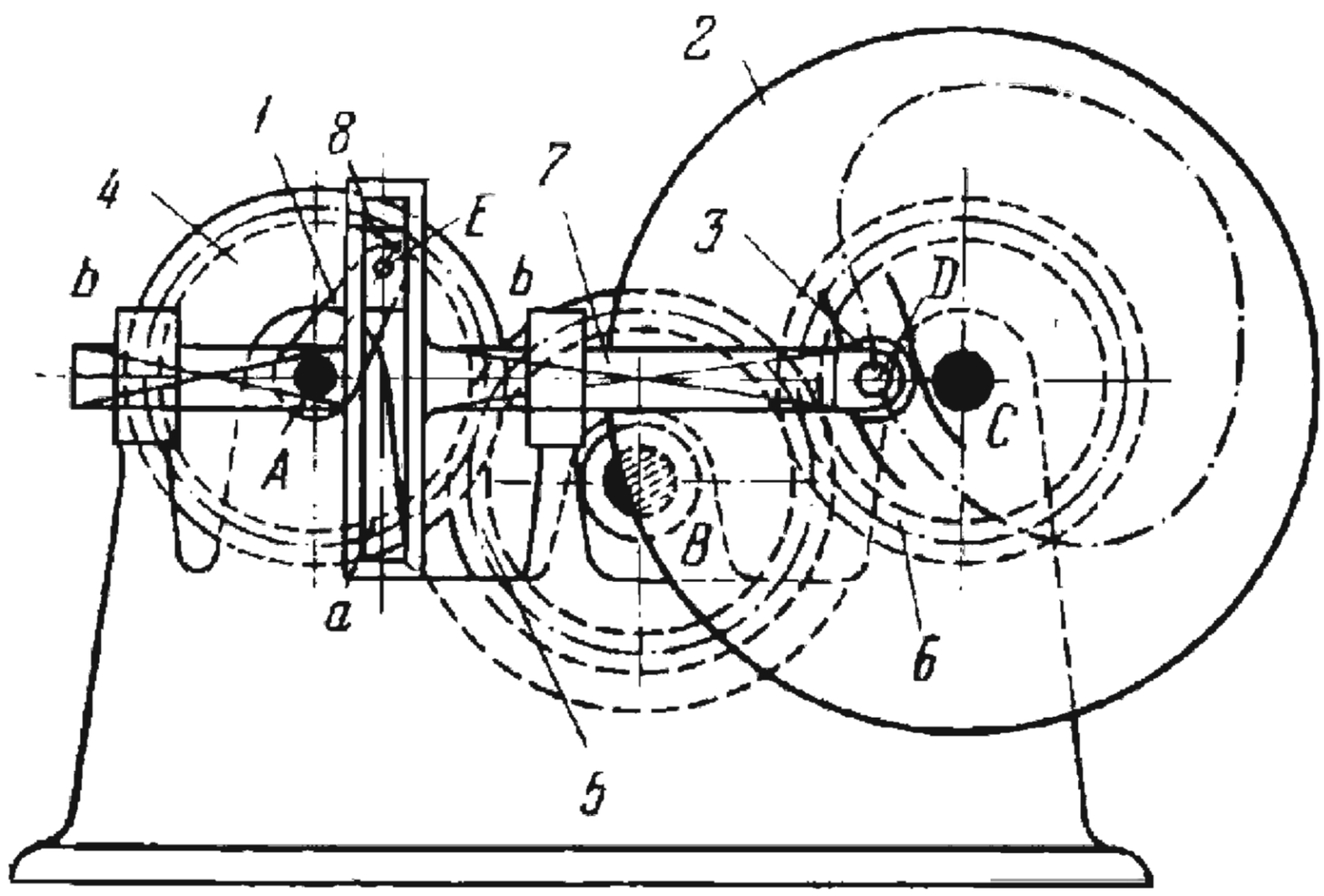

Crank *1* rotates about fixed axis *A* and is connected by turning pair *E* to slider *8* which moves along slot *a* of slotted link *7*. Link *7* slides in fixed guides *b-b*. Gear *4* is rigidly attached to crank *1* and meshes with gear *5* which rotates about fixed axis *B*. Gear *5* meshes with gear *6* which rotates about fixed axis *C* and is rigidly attached to disk *2*. Disk *2* is the workpiece in which the cam slot is to be machined. Machining is accomplished with end milling cutter *3* which rotates about axis *D* of link *7*. In the version shown, a cam slot of a shape based on a sine law is machined. Gears *4*, *5* and *6* have the same pitch radius.

2558	LEVER-GEAR MECHANISM OF A DOUGH KNEADING MACHINE	LrG FD

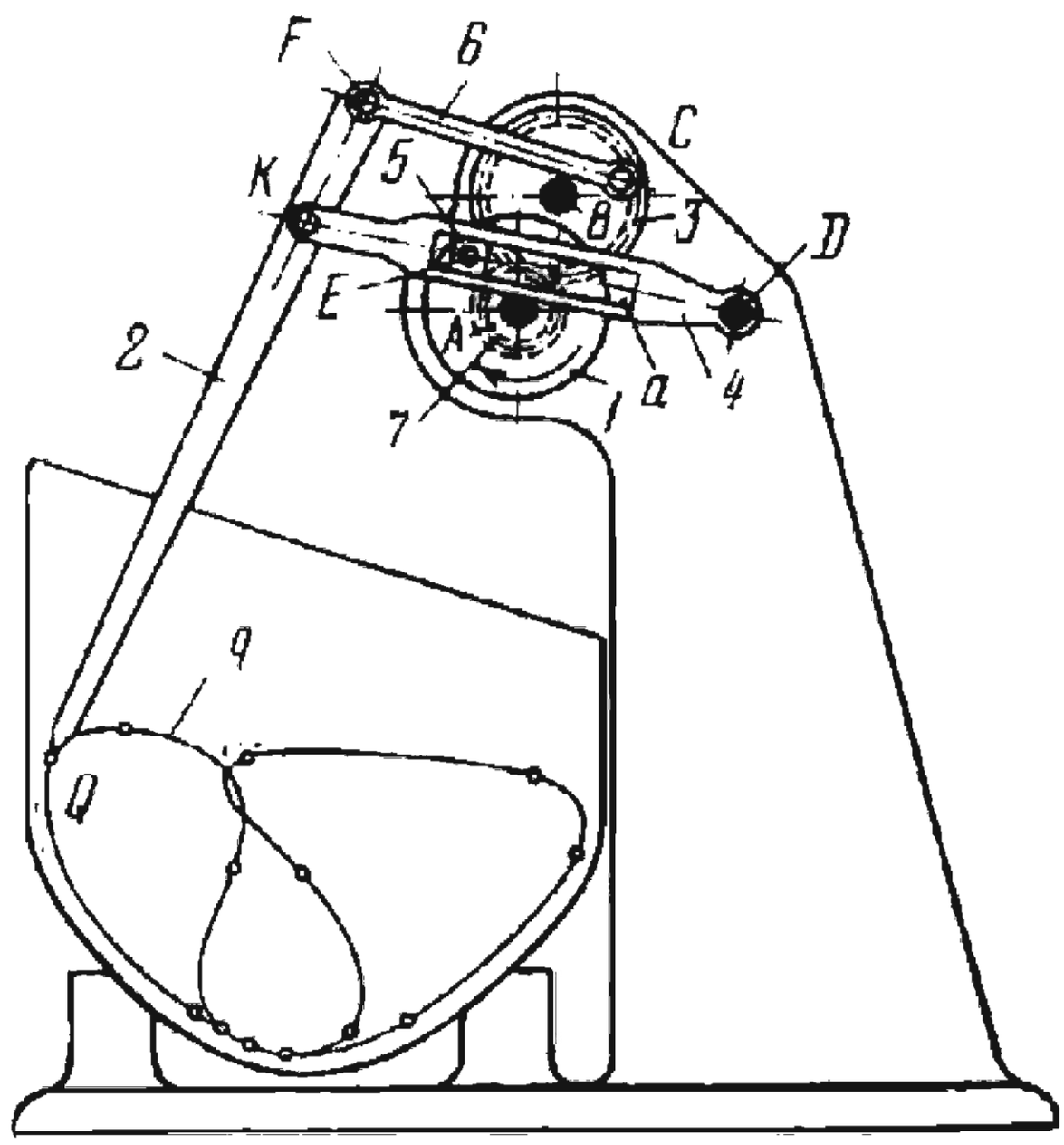

Gear *7* rotates about fixed axis *A* and meshes with gear *3* which rotates about fixed axis *B*. Disk *1* is rigidly attached to (or integral with) gear *7* and is connected by turning pair *E* to slider *5* which moves along slot *a* of slotted lever *4*. Slotted lever *4* turns about fixed axis *D*. Gear *3* is connected by turning pair *C* to link *6*. Link *2* is connected by turning pairs *K* and *F* to links *4* and *6*. When driving gear *7* rotates, link *2*, the kneading member of a dough kneading machine, has a complex motion and its point *Q* describes complex connecting-rod curve *q*.

2559	LEVER-GEAR MECHANISM OF A DOUGH KNEADING MACHINE	LrG FD

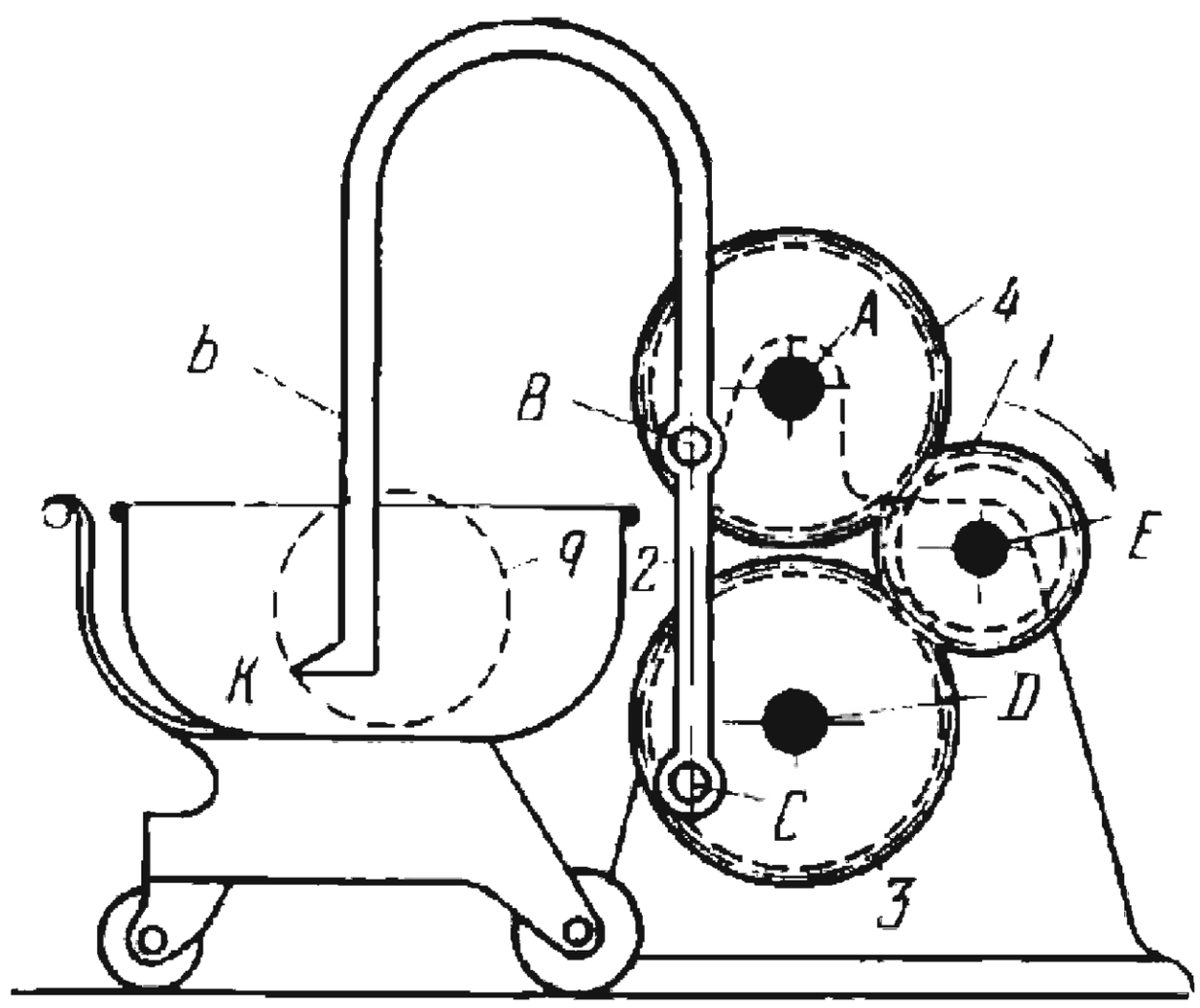

Gear *1* rotates about fixed axis *E* and meshes with gears *3* and *4*, of equal pitch diameter, which rotate about fixed axes *D* and *A*. Gears *3* and *4* are connected by turning pairs *C* and *B* to link *2* which carries the kneading member *b*. The dimensions of the links comply with the conditions: $\overline{AB} = \overline{DC}$ and $\overline{AD} = \overline{BC}$. Thus figure *ABCD* is a parallelogram and therefore, when gear *1* rotates, any point *K* of member *b* describes circle *q* of a radius

$$r = \overline{AB}.$$

2560	LEVER-GEAR MECHANISM OF A GRINDING ATTACHMENT	LrG FD

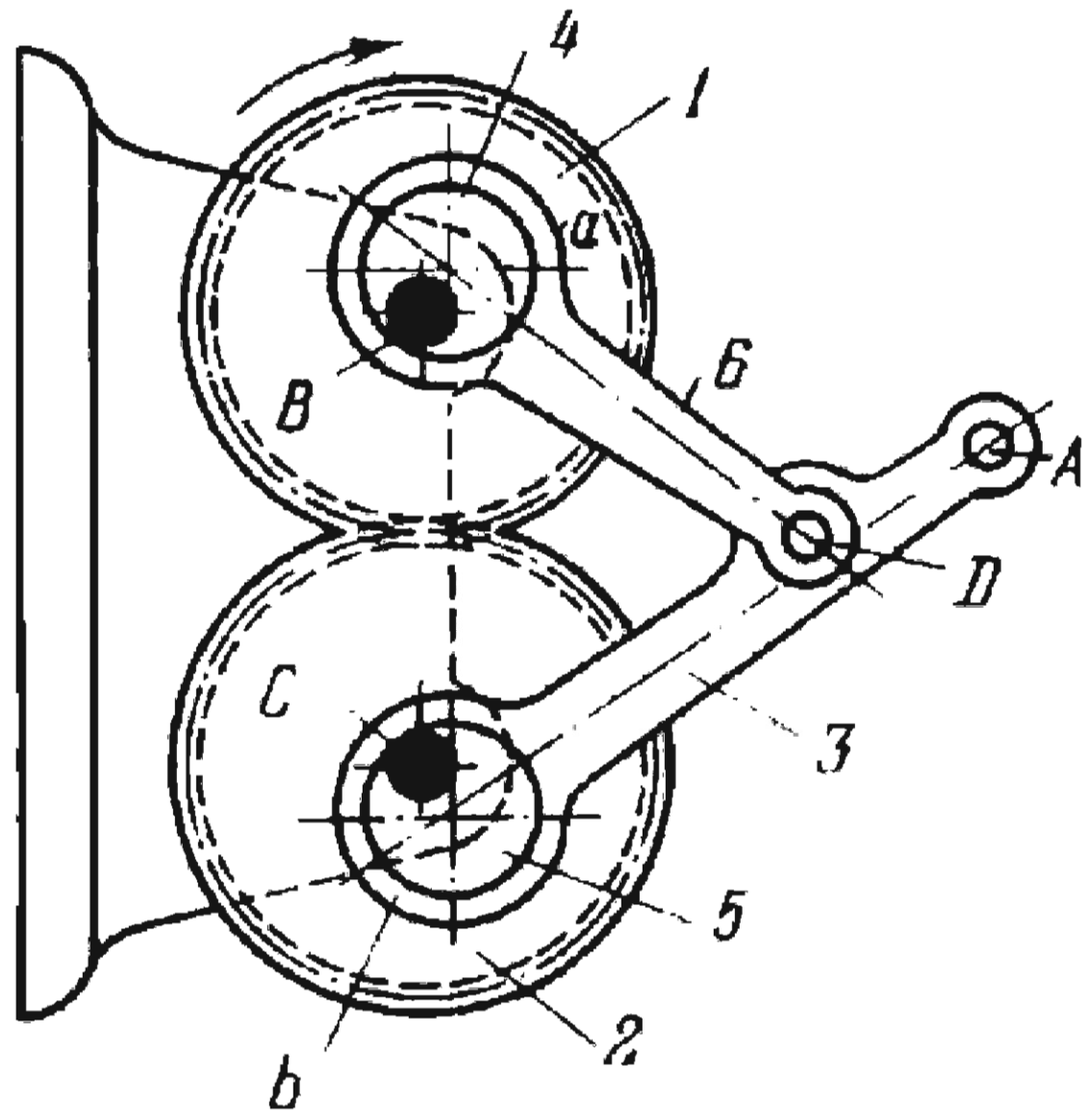

Gear *1* rotates about fixed axis *B* and meshes with gear *2* which rotates about fixed axis *C*. Eccentric *4* is rigidly attached to gear *1* and is connected by a turning pair to collar *a* of link *6*. Eccentric *5* is rigidly attached to gear *2* and is connected by a turning pair to collar *b* of link *3* which, in turn, is connected by turning pair *D* to link *6*. If the numbers of teeth of gears *1* and *2* differ by a small amount, a full cycle of motion of the mechanism will equal a number of revolutions that is the least common multiple of the numbers of teeth of the gears. When driving gear *1* rotates, point *A* of link *3* describes a complex connecting-rod curve that can be applied for the operation of a grinding attachment mounted on this link.

2561	LEVER-GEAR ROLL MECHANISM	LrG FD

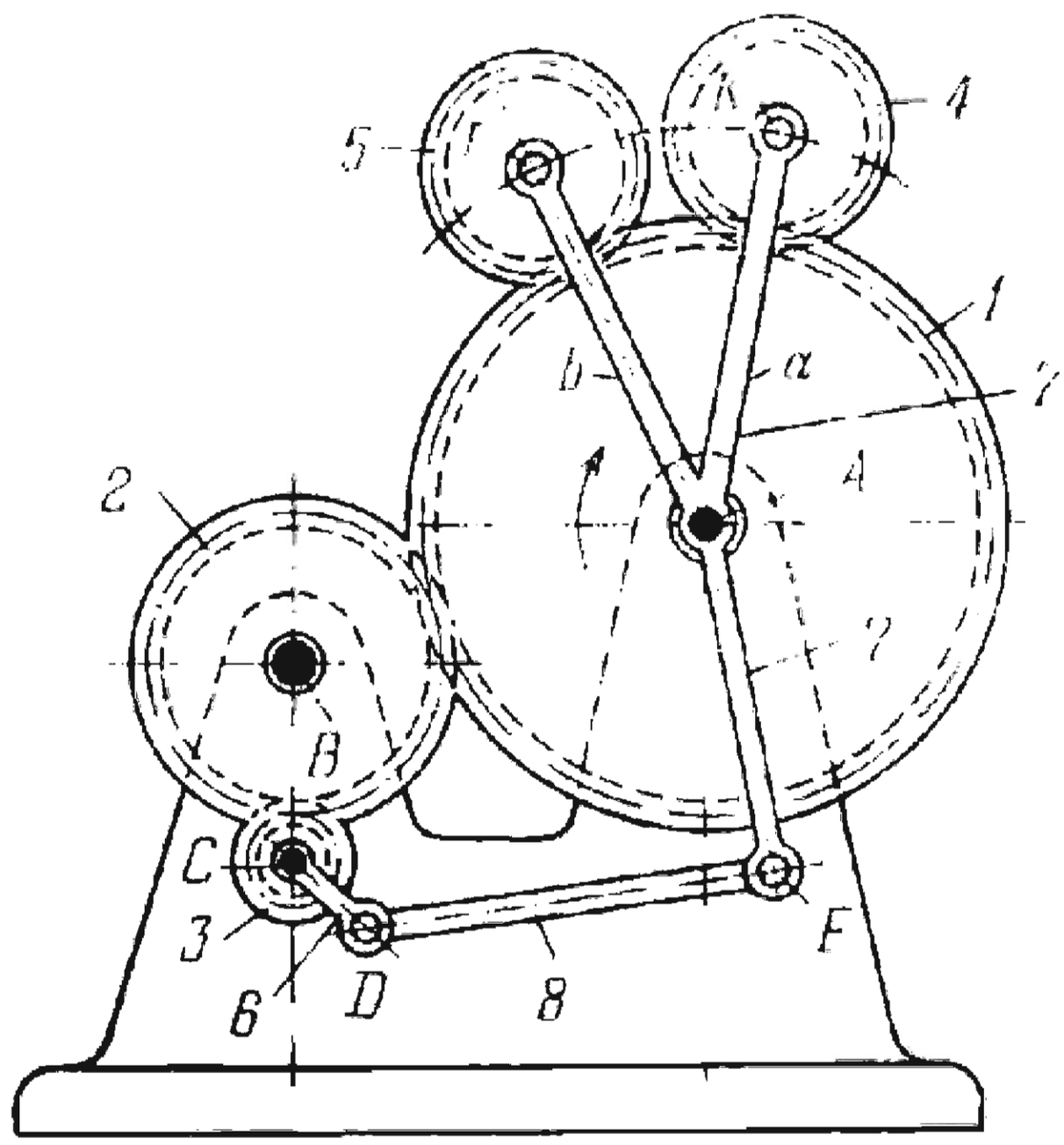

Gear *1* rotates about fixed axis *A* and meshes with gear *2* which rotates about fixed axis *B*. Gear *2* meshes with gear *3* which rotates about fixed axis *C*. Crank *6* is rigidly attached to gear *3* and is connected by turning pair *D* to connecting rod *8* which, in turn, is connected by turning pair *E* to Y-shaped rocker arm *7*. Rocker arm *7* turns about axis *A*. The large roll gear is rigidly attached to gear *1* and has the same pitch diameter. Two small rolls rotate about axes *F* and *K* at the ends of members *b* and *a* of link *7*. They are rigidly attached to roll gears *5* and *4* which mesh with gear *1*. When driving gear *1* rotates, rocker arm *7* makes one full oscillation to each revolution of gear *3*.

2562	LEVER-GEAR MECHANISM OF A STEREOSCOPE	LrG FD

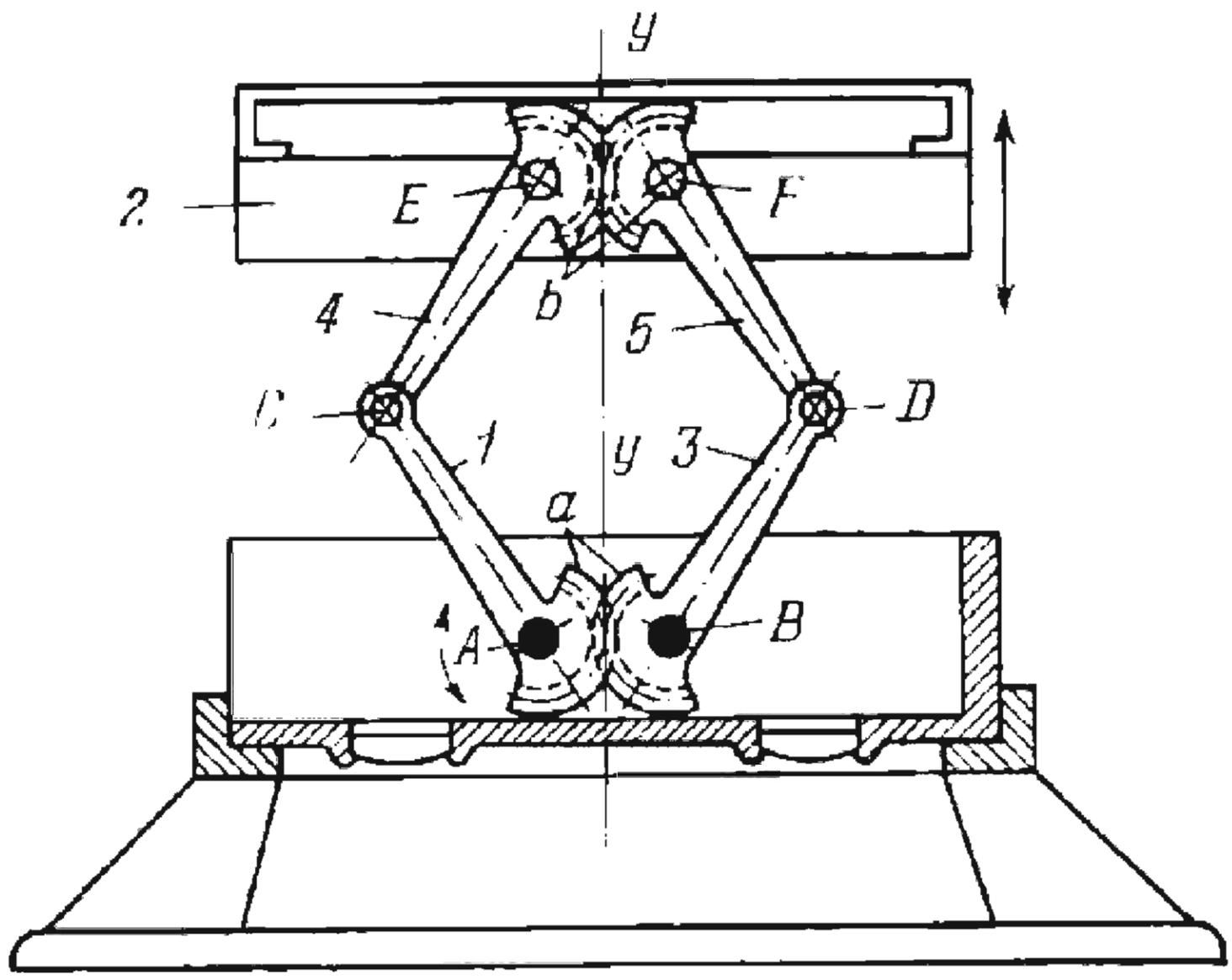

Links *1* and *3* turn about fixed axes *A* and *B*, and have identical gear segments *a* which mesh together. Links *1* and *3* are connected by turning pairs *C* and *D* to links *4* and *5* which, in turn, are connected by turning pairs *E* and *F* to link *2*. Links *4* and *5* have identical gear segments *b* which mesh together. The lengths of the links comply with the conditions: $\overline{AC} = \overline{BD}$ and $\overline{CE} = \overline{DF}$. When link *1* is turned, link *2* has translational motion along axis *y-y*.

2563	LEVER-GEAR MECHANISM OF A WASHING MACHINE	LrG FD

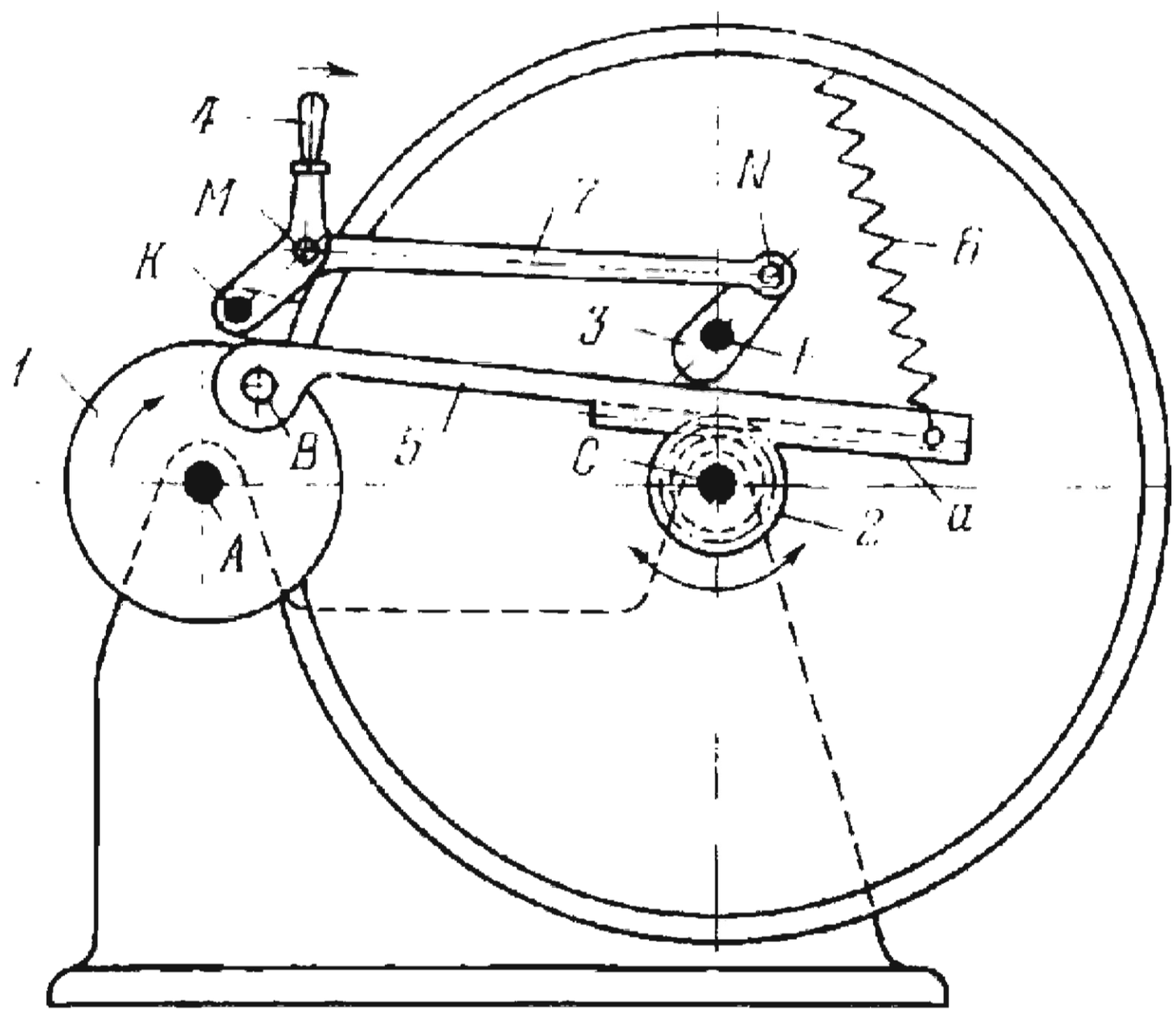

Link *1* rotates about fixed axis *A* and is connected by turning pair *B* to link *5* which has gear rack *a*. Rack *a* meshes with pinion *2* which rotates about fixed axis *C*. Link *5* is suspended by spring *6* from the body of the machine. When driving link *1* rotates, pinion *2* oscillates together with the washing drum as long as cam *3* is in the position shown. Cam *3* turns about fixed axis *E* and is connected by turning pair *N* to link *7* which, in turn is connected by turning pair *M* to handle *4*. Handle *4* turns about fixed axis *K*. When handle *4* is turned clockwise, cam *3* is turned and spring *6* raises rack *a* out of engagement with pinion *2*. This stops oscillation of pinion *2* and the washing drum.

2564	LEVER-GEAR MECHANISM OF AN AUTOMOBILE WINDSHIELD WIPER	LrG FD

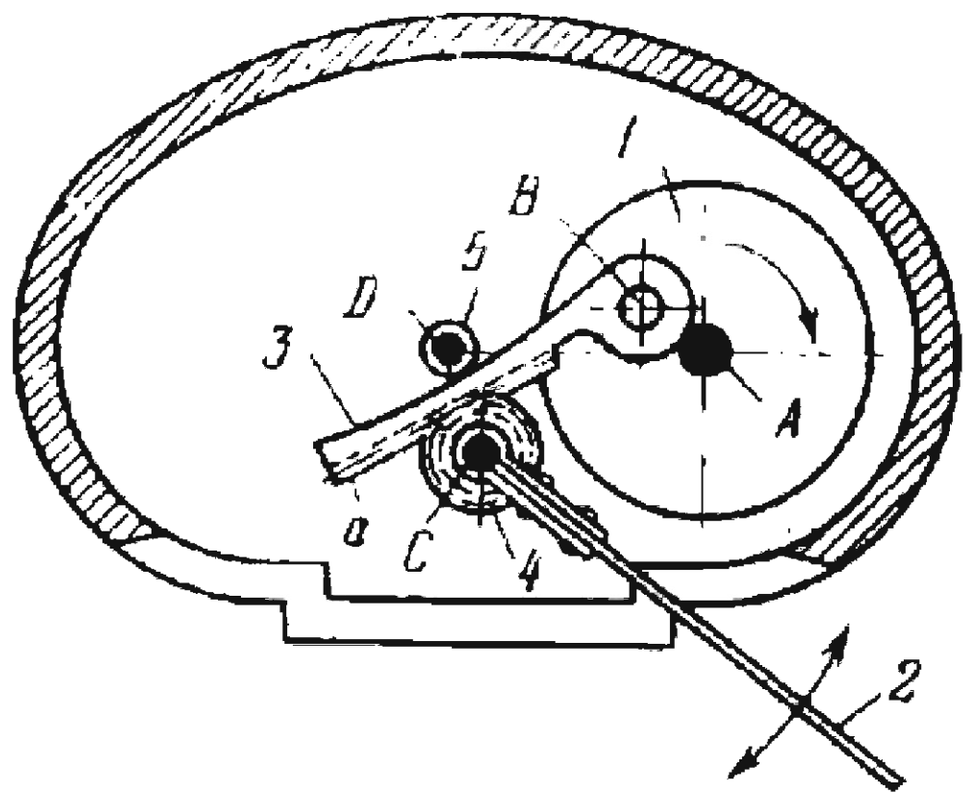

Link *1* rotates about fixed axis *A* and is connected by turning pair *B* to link *3* which has gear rack *a* meshing with pinion *4*. Pinion *4* turns about fixed axis *C* and is rigidly attached to wiper blade *2*. Rack *a* is held in engagement with pinion *4* by roller *5* which rotates about fixed axis *D*. When link *1* rotates, wiper blade *2* oscillates.

2565	RACK-AND-PINION MECHANISM OF A SLOTTER	LrG FD

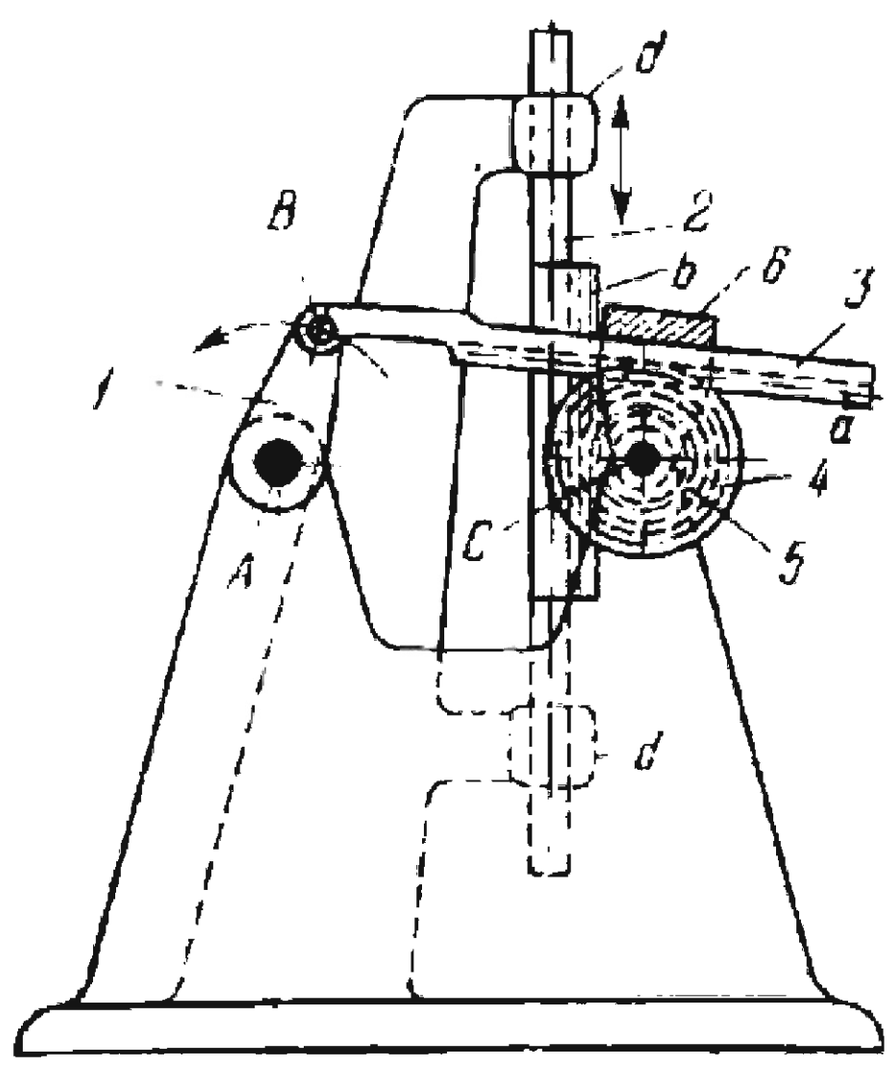

Crank *1* rotates about fixed axis *A* and is connected by turning pair *B* to link *3* which has gear rack *a*. Rack *a* meshes with pinion *4* which rotates about fixed axis *C*. Pinion *5* is rigidly attached to (or integral with) pinion *4* and meshes with gear rack *b* of ram *2* of the slotter which slides in vertical fixed guides *d-d*. Link *6* turns about axis *C* and is connected by a sliding pair to link 3; it holds rack *a* in engagement with pinion *4*. When crank *1* rotates, ram *2* reciprocates, providing the cutting motion of the slotter.

2566	SLOTTED-LEVER-GEAR MECHANISM OF A PLANER	LrG FD

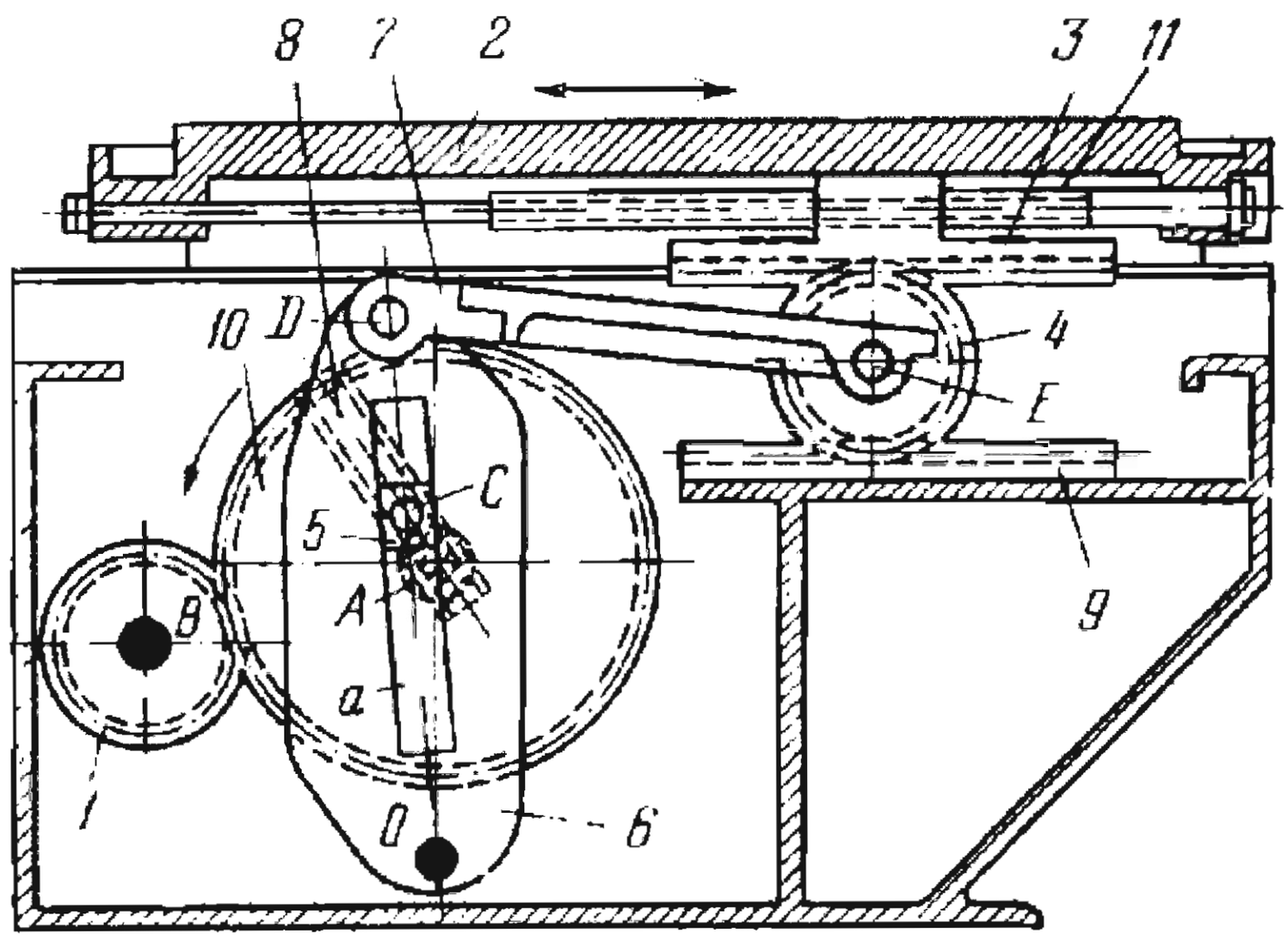

Gear *1* rotates about fixed axis *B* and meshes with gear *10* which rotates about fixed axis *A*. Gear *10* is connected by turning pair *C* to slider *5* which moves along slot *a* of slotted lever *6*. Lever *6* turns about fixed axis *O* and is connected by turning pair *D* to link *7* which, in turn, is connected by turning pair *E* to gear *4*. Gear *4* meshes with fixed gear rack *9* and gear rack *3* which is rigidly attached to planer table *2*. The position of rack *3* with respect to table *2* is adjusted by screw *11*. When driving gear *1* rotates, table *2* reciprocates with different times for the forward (cutting) and return strokes. Table *2* travels at a velocity twice that of point *E*. The stroke length of table 2 can be changed by adjusting crankpin *C* with slider *5* along slot *8* in gear *10* and clamping it in the required position.

2567	LEVER-GEAR MECHANISM OF A BAR CUTTER	LrG FD

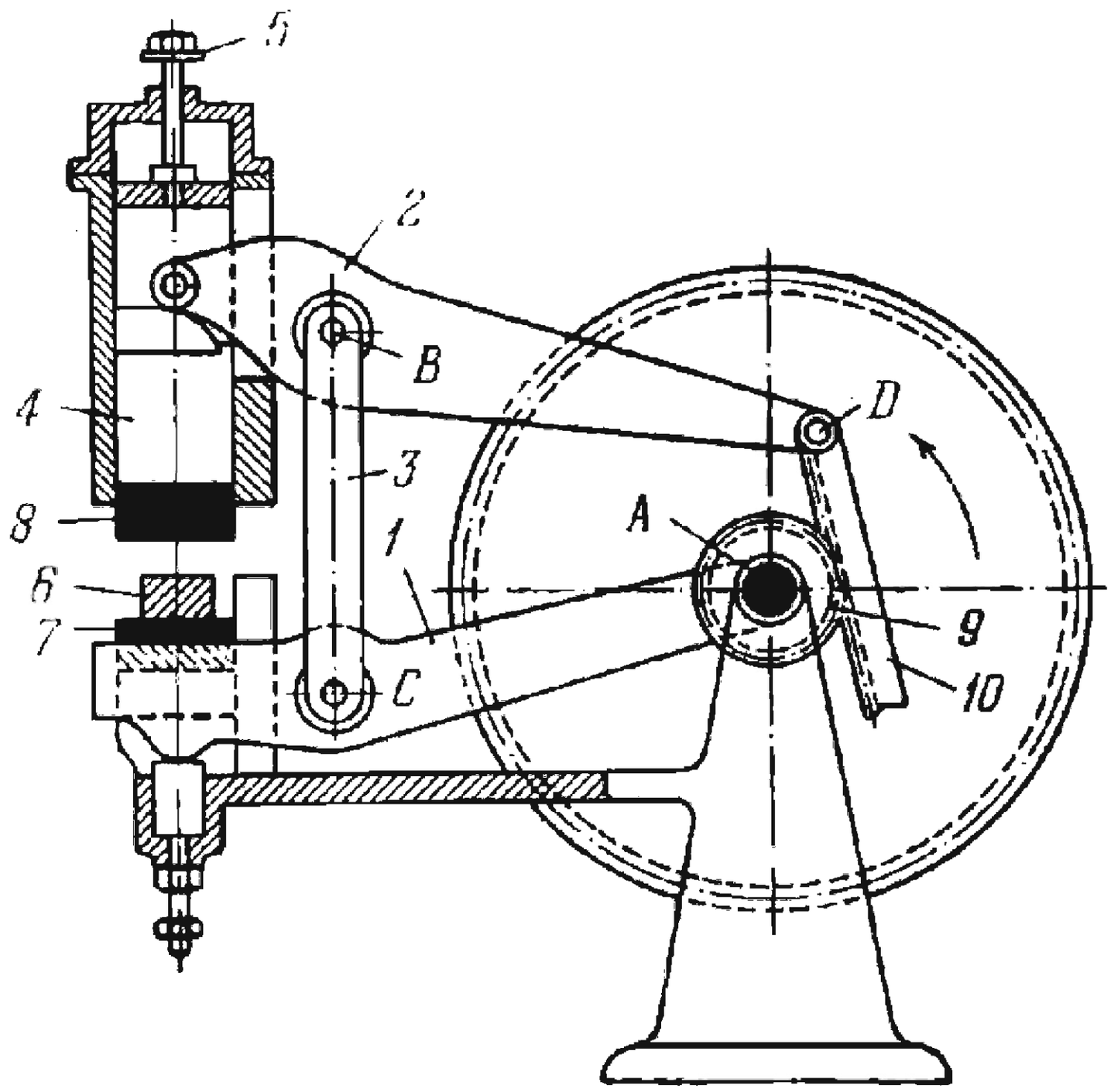

The cutting mechanism consists of two levers, *1* and *2*, connected by turning pairs *C* and *B* to tie-rod *3*. One end of lever *2* bears against slide *4* of upper knife *8* and the other end is connected by turning pair *D* to gear rack *10* which meshes with gear *9*. Gear *9* rotates about fixed axis *A*. Lever *1* is the slide of lower knife *7*. The other end of lever *1* turns freely about axis *A*. When gear *9* rotates, upper knife *8* travels downward due to the weight of levers *1* and *2* and slide *4*. When upper knife *8* reaches bar stock *6* to be cut off, its motion is stopped by stop nut *5*. Upon further rotation of gear *9*, lever *2*, through tie-rod *3*, raises the slide of lower knife *7* and performs the cutting-off operation.

2568	LEVER-GEAR MECHANISM OF AN INVOLUTE PROFILE TESTER	LrG FD

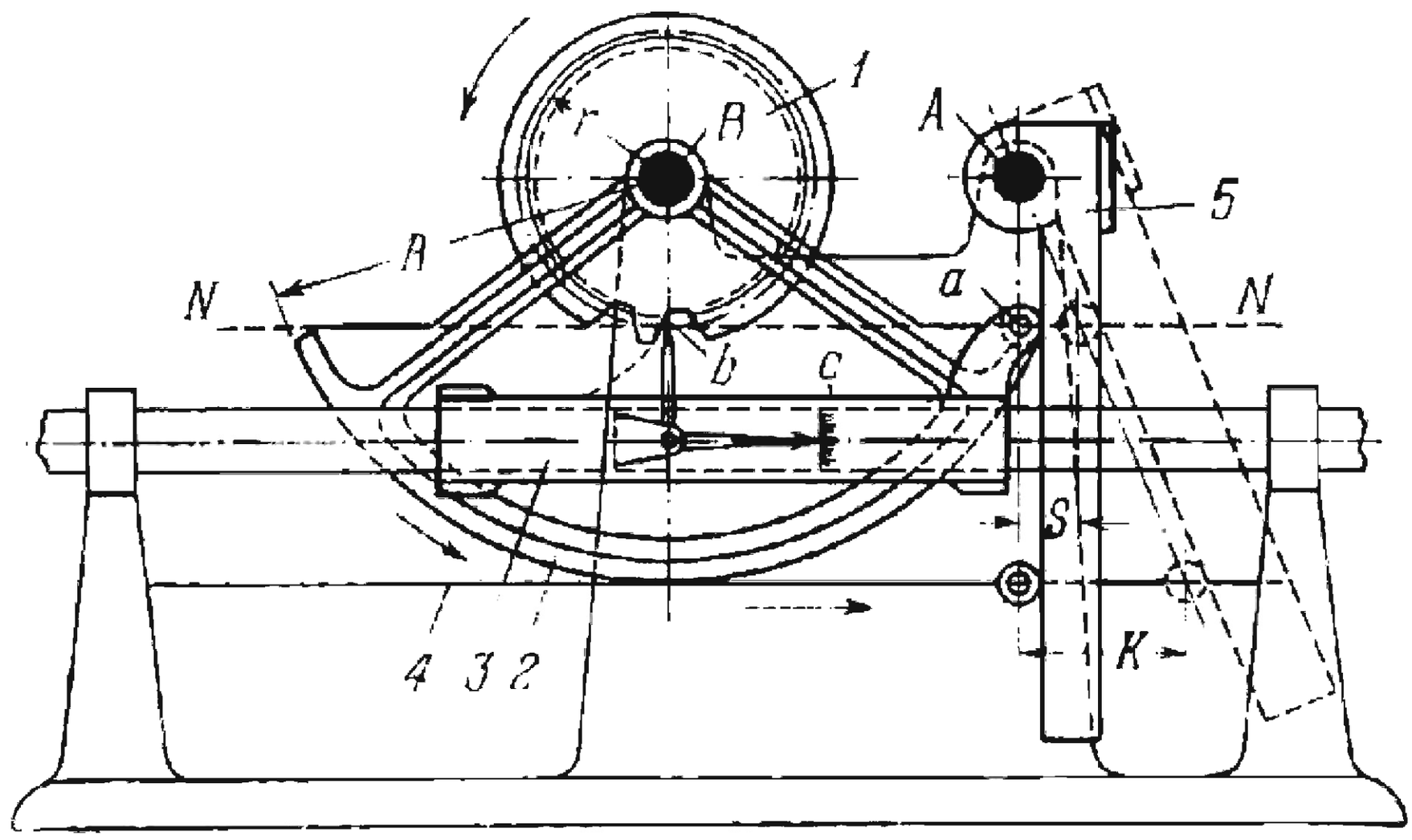

Gear *1* to be tested is mounted with segment *2* on fixed axis *B*. Roller *a* and contact point *b* of carriage *3* lie on straight line *N-N*, parallel to the motion of the carriage. The distance to roller *a* from axis *A* equals the radius of the base circle of gear *1*. When gear *1* is turned, the rolling motion of segment *2* is transmitted by flexible steel bands *4* to lever *5* which is deviated about fixed axis *A* so that $\frac{S}{K} = \frac{r}{R}$. Under this condition, points of tangent *N-N* describe an involute of a circle of radius *r*. If there is no error in the tooth profile of gear *1*, contact point *b* remains stationary with respect to moving carriage *3*. Errors in tooth profile from that of a true involute deviate contact point *b* whose motion is transmitted to indicator *c*.

2569	LEVER-GEAR MECHANISM OF A CIRCULAR SAWING MACHINE	LrG FD

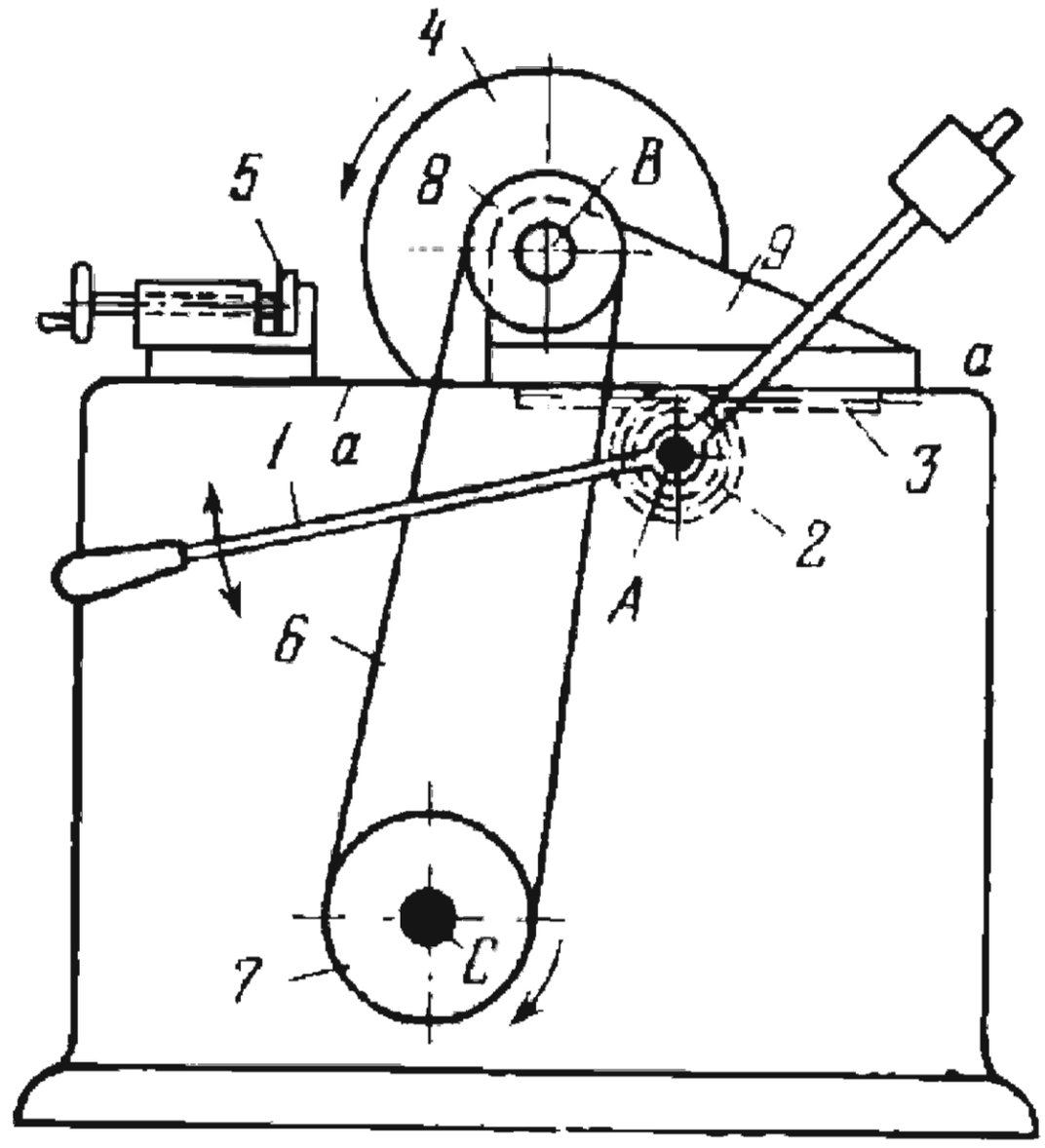

Lever *1* is rigidly attached to pinion *2* which turns about fixed axis *A* and meshes with gear rack *3* of sawhead *9*. Sawhead *9* slides along fixed guides *a-a*. Circular saw blade *4* rotates about axis *B* and is powered by a flexible drive consisting of pulleys *7* and *8* and flexible link *6*. When lever *1* is turned counterclockwise, sawhead *9* travels to the left and advances saw blade *4* to stock *5* to be cut. When lever *1* is turned clockwise, the saw blade is retracted from stock *5*.

2570	LEVER-GEAR MECHANISM FOR A GUN BARREL RIFLING DEVICE	LrG FD

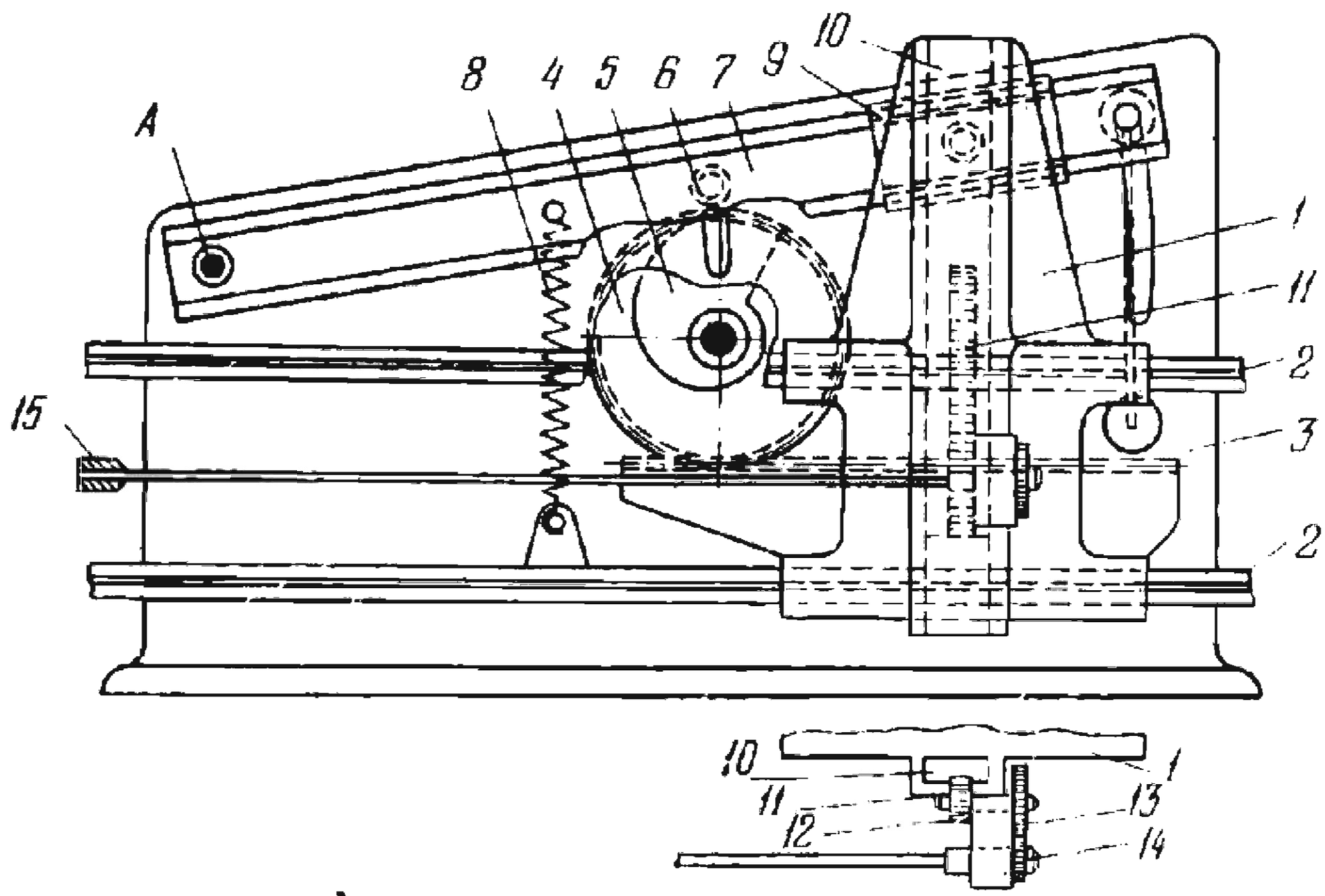

As carriage *1* travels along guides *2*, gear rack *3* rotates gear *4* which is rigidly attached to cam *5*. At this, bar *7* with follower roll *6* turns about fixed axis *A*. Roll *6* is held in contact with cam *5* by spring *8*. Slide *9* travels along bar *7* and is pivoted to cross slide *10* which moves in a slot of carriage *1*. Gear rack *11*, rigidly attached to cross slide *10*, meshes with pinion *12* and, through gears *13* and *14*, rotates rifling tool *15*. Axial travel of rifling tool *15* is accomplished by travel of carriage *1*. Thus helical motion is imparted to the rifling tool, enabling it to cut helical grooves (rifling) in the bores of gun barrels.

2571	LEVER-GEAR PLANETARY MECHANISM OF A FLAX SCUTCHER	LrG FD

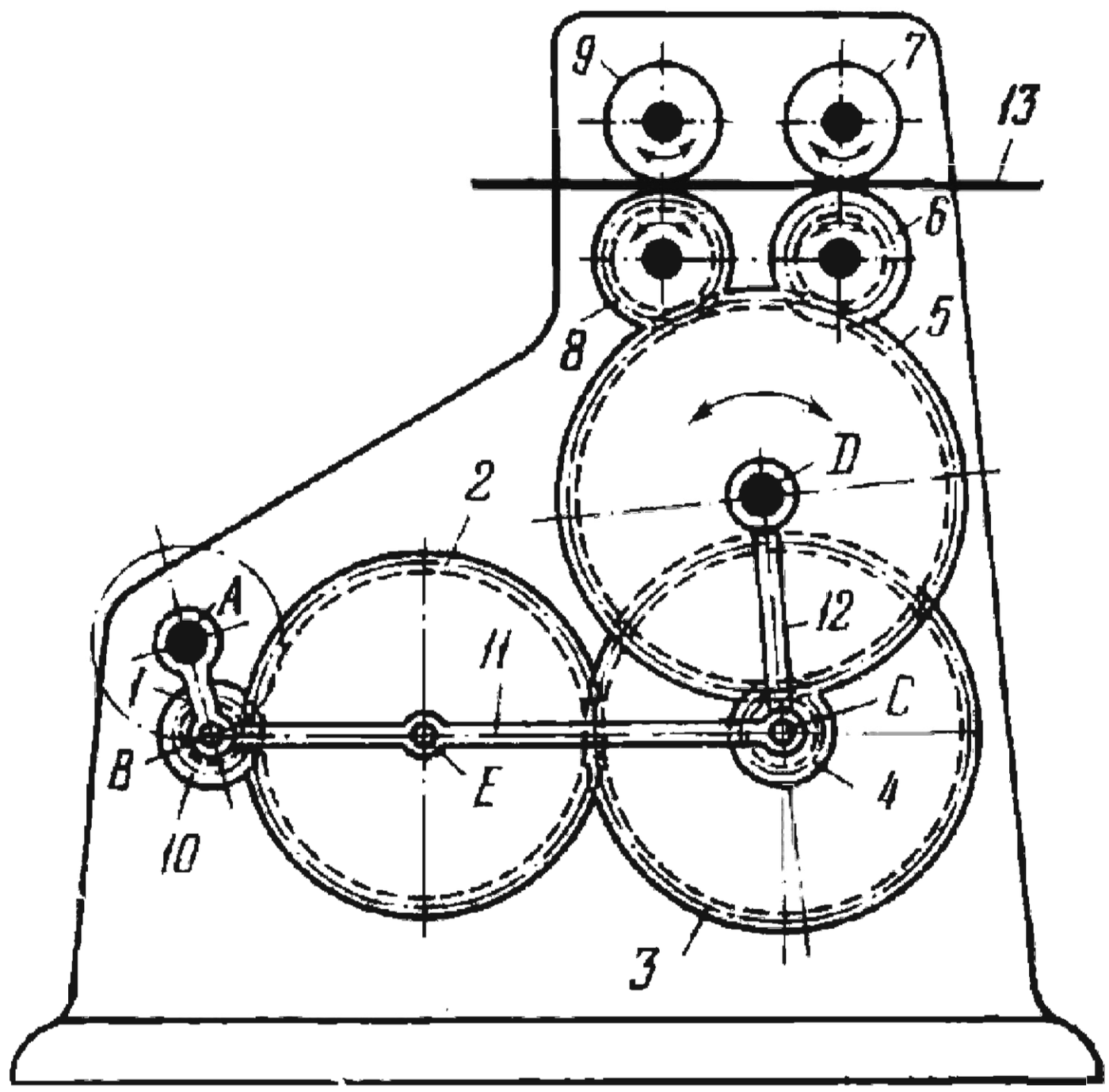

Crank *1* is rigidly attached to gear *10* and rotates about fixed axis *A*. Gear *10* meshes with gear *2* which rotates about axis *E* of connecting rod *11*. Gear *2* meshes with gear *3* which rotates about axis *C*. Gear *4* is rigidly attached to gear *3* and meshes with gear *5* which rotates about fixed axis *D*. Connecting rod *11* is connected by turning pairs *B* and *C* to crank *1* and rocker arm *12* which turns about axis *D*. When crank *1* rotates at uniform velocity, gear *5* rotates in both directions to each cycle of motion. Through gears *6* and *8*, meshing with gear *5*, reversing rotary motion is transmitted to fluted rolls *7* and *9* which scutch material *13* being fed into the scutcher.

2572	SLOTTED-LEVER-GEAR MECHANISM FOR MILLING SINE-CURVE CAM SLOTS	LrG FD

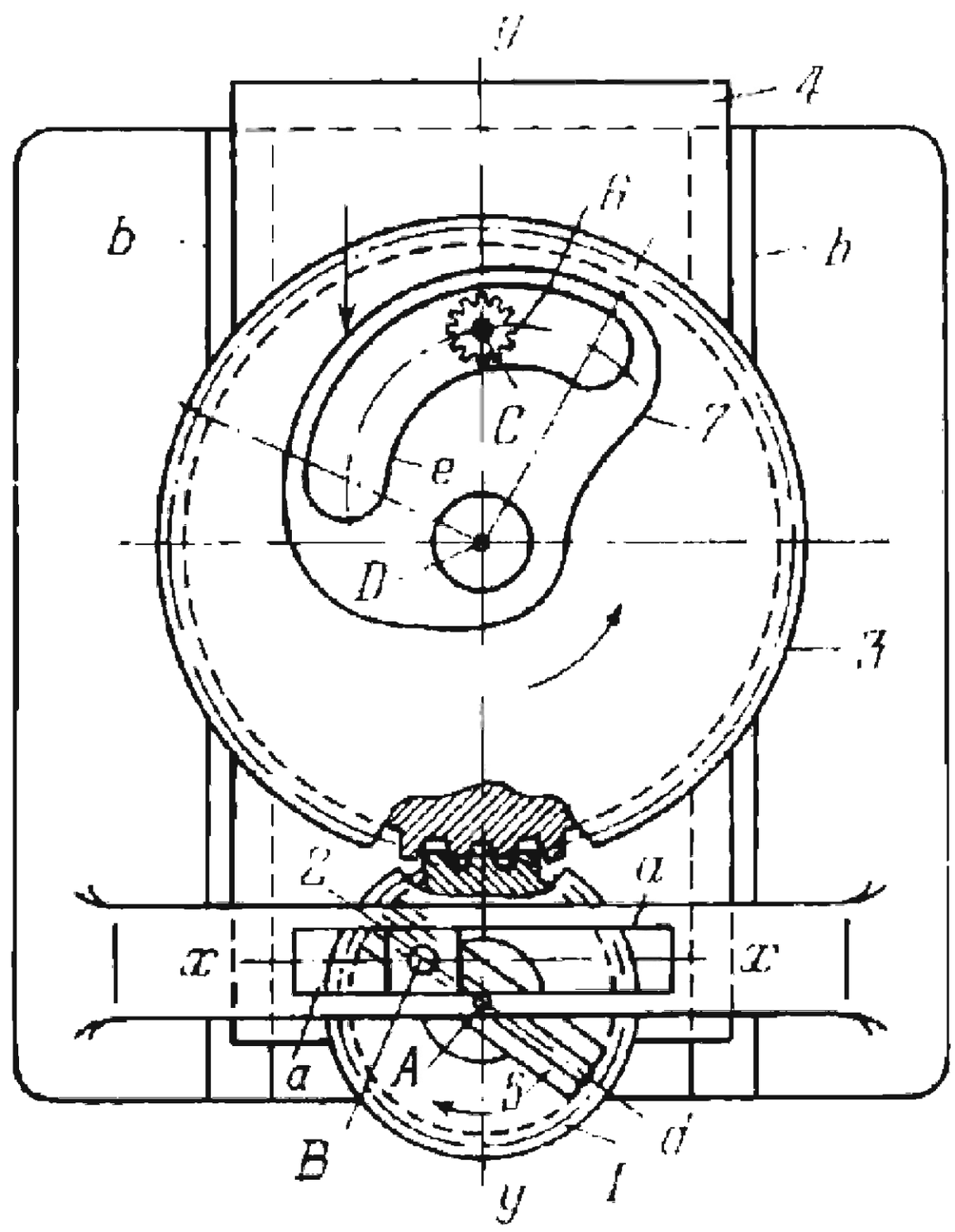

The mechanism is intended for machining cam slots of a shape based on a sine law. Driving gear *1* rotates about axis *A* of slide *4*. Link *5* is connected by turning pair *B* to slider *2* which moves along fixed guides *a-a*, and by a turning pair to slide *4* which moves along fixed guides *b-b*. End milling cutter *6* rotates about fixed axis *C*. Gear *1* meshes with gear *3* on which cam blank *7* is rigidly clamped. Gear *3* rotates about axis *D* of slide *4*. When driving gear *1* rotates, blank *7* is displaced along axis *y-y* by a distance equal to

$$y = y_0 \pm r \sin\varphi$$

and rotates through an angle equal to

$$\psi = \frac{z_1}{z_3}\varphi$$

where y_0 is the initial coordinate determining the position of slide *4*, r is the distance $\overline{AB}$, φ is the angle between line AB and axis x-x, and z_1 and z_3 are the numbers of teeth of gears *1* and *3*. Milling cutter *6* machines slot *e* in blank *7*. Displacement y can be varied by changing length $\overline{AB}$. This is done by clamping axis *B* at the required position in slot *d*.

2573	LEVER-GEAR PLANETARY SLAY MECHANISM	LrG FD

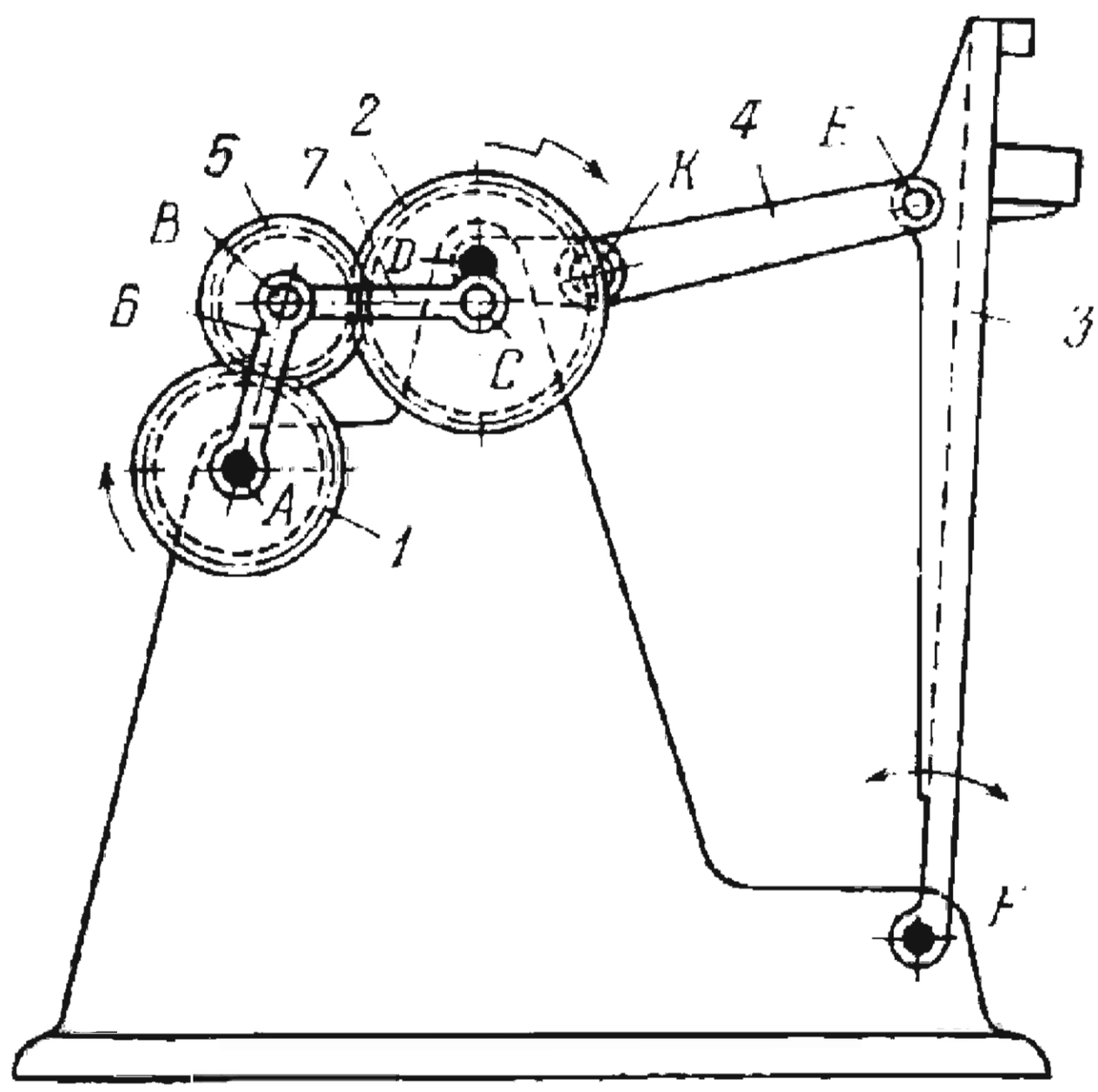

Gear *1* rotates about fixed axis *A* and meshes with gear *5* which rotates about axis *B*. Gear *5* meshes with gear *2* which rotates about eccentrically located axis *D*. Link *6* turns about axis *A* and is connected by turning pair *B* to link *7* which, in turn, is connected by turning pair *C* to gear *2*. Link *4* is connected by turning pairs *K* and *E* to gear *2* and to slay *3* which turns about fixed axis *F*. When driving gear *1* rotates at uniform velocity, gear *2* rotates with nonuniform velocity and slay *3* oscillates with the required type of motion.

2574	LEVER-GEAR MECHANISM FOR TREATING FLAX FIBRES	LrG FD

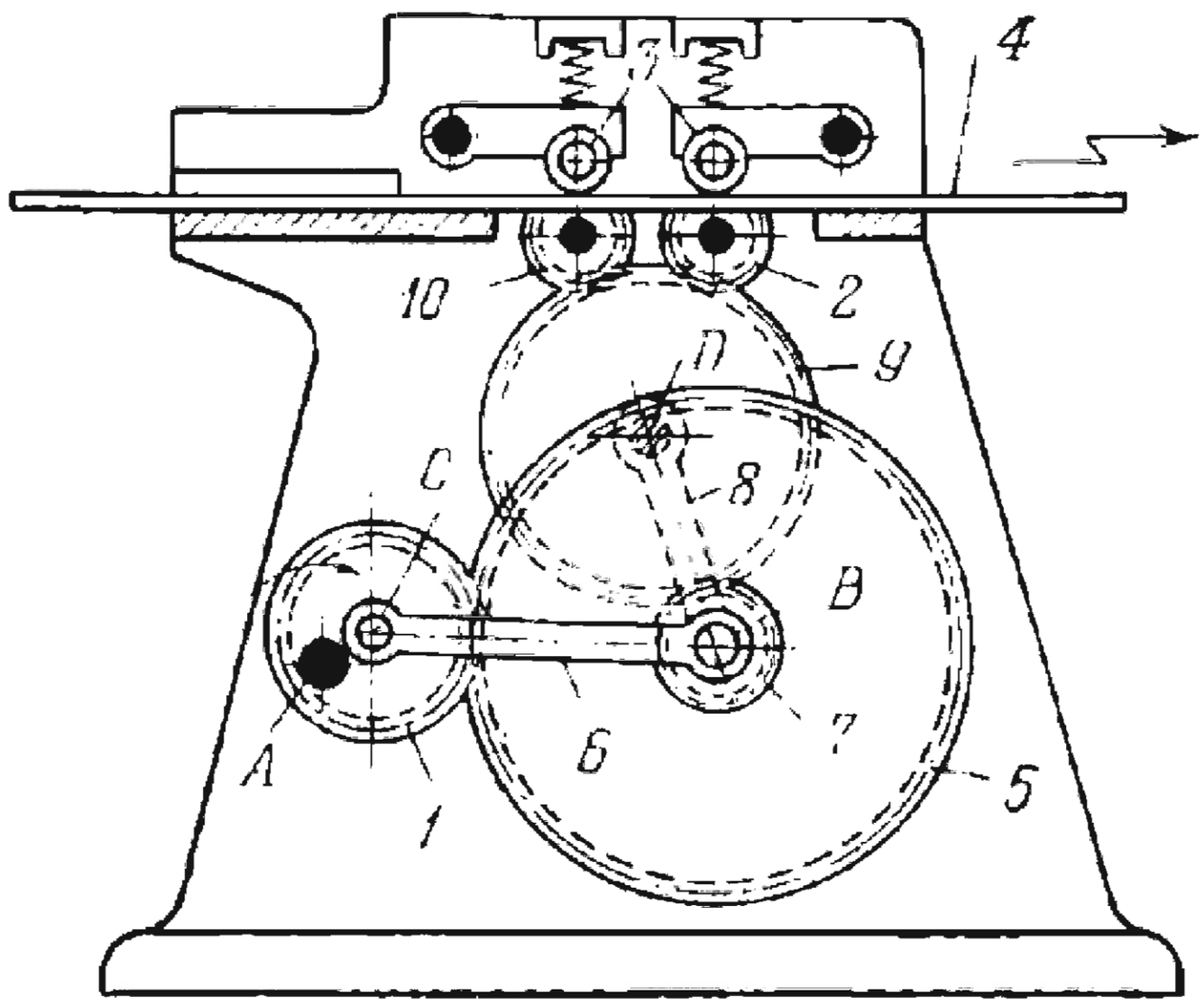

Eccentrically mounted gear *1* rotates about fixed axis *A* and meshes with gear *5*. Gear *7* is rigidly attached to gear *5* and rotates together with it about axis *B*. Link *6* is connected by turning pairs *C* and *B* to gear *1* and to link *8* which turns about fixed axis *D*. Gear *7* meshes with gear *9* which rotates about axis *D*. Through gears *10*, gear *9* drives rolls *2* which are rigidly attached to gears *10*. When gear *1* rotates at uniform velocity, rolls *2* have an intermittent reversing rotary motion that feeds the fibrous material between rolls *2* and pressure rollers *3*.

2575	LEVER-GEAR PLANETARY MECHANISM FOR TURNING COMPLEX CONTOURS	LrG FD

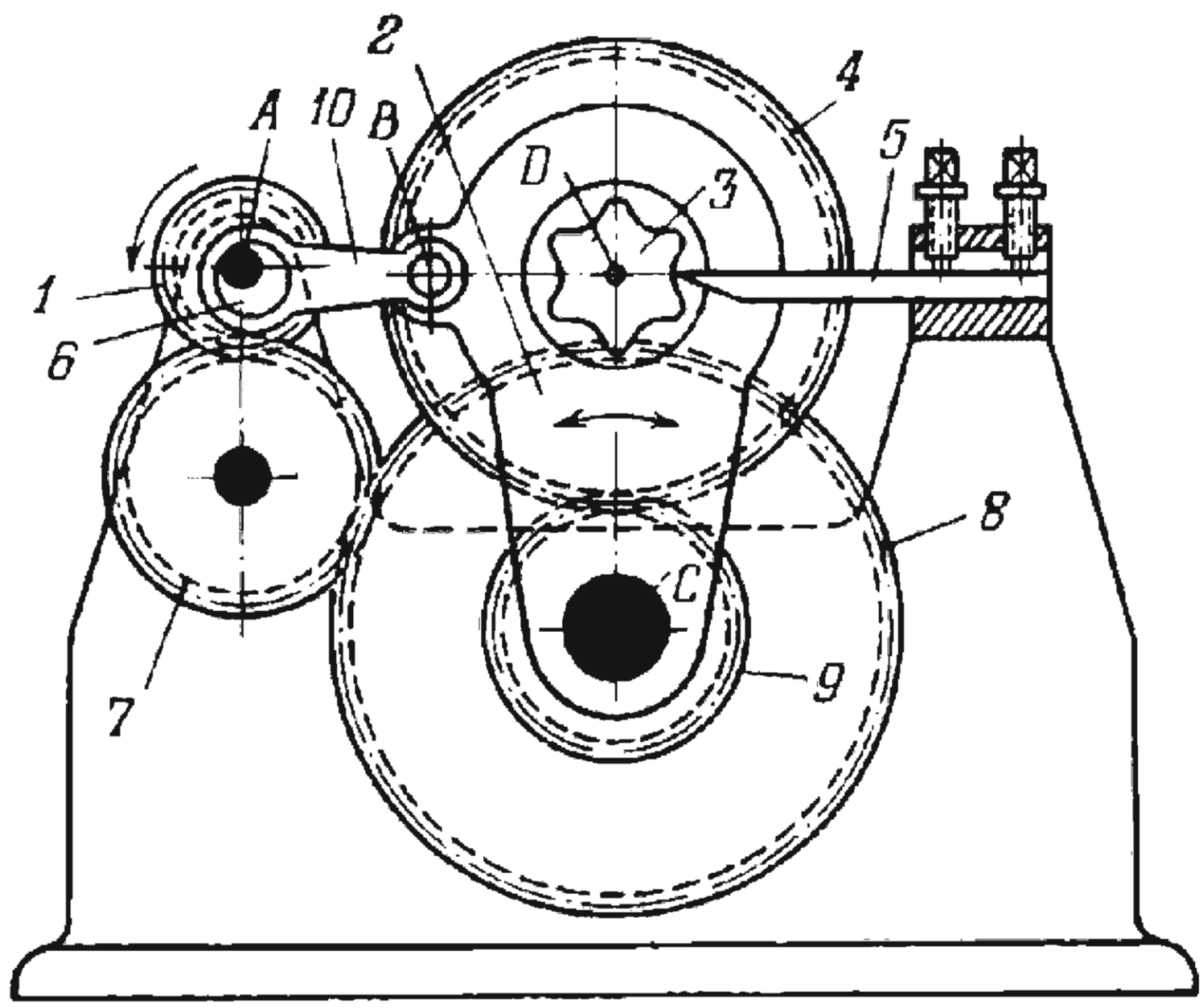

Eccentric *6* rotates about fixed axis *A* and is connected by a turning pair to connecting rod *10* which, in turn, is connected by turning pair *B* to rocker arm *2*. Rocker arm *2* turns about fixed axis *C*. Gear *1* is rigidly attached to eccentric *6* and transmits rotation through a train of gears *7*, *8* and *9* (the last two being rigidly attached together) to gear *4* which rotates about axis *D* of rocker arm *2*. Blank *3* which is to be machined to a complex contour is rigidly clamped on gear *4* and participates with it in its complex motion about axes *C* and *D*. The blank is machined with a single-point tool *5* (or a milling cutter may be employed) clamped to the base. The contour obtained depends upon the dimensions of the links and the transmission ratios of the gearing. The contour shown is given as an example.

2576	LEVER-GEAR PLANETARY MECHANISM FOR CUTTING PAPER STRIP	LrG FD

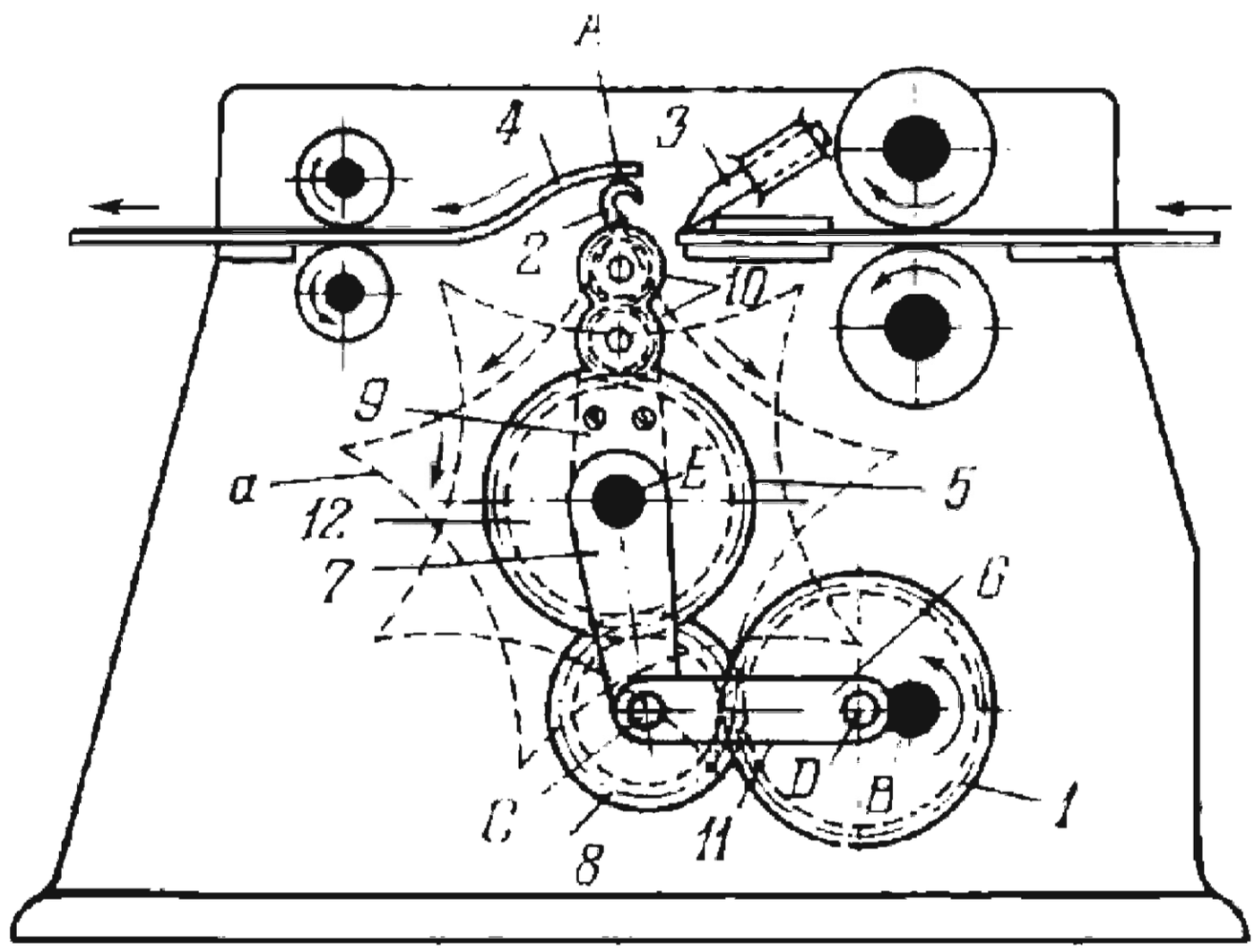

Eccentrically mounted gear *1* rotates about fixed axis *B* and meshes with gear *8* which rotates about axis *C*. Gear *8* meshes with gear *5* which rotates about fixed axis *E*. Links *7* and *11* are connected by turning pairs to gears *5*, *8* and *1*. Link *7* turns about axis *E*. Carrier *9* is rigidly attached to gear *5* and mounts two planet gears *10* of equal pitch diameter and meshing with each other. On the same axis with gear *5* is fixed gear *12* which has the same pitch diameter as gear *5*. When carrier *9* rotates, planet gears *10* roll around gear *12* and point *A* of link *2*, which is rigidly attached to upper gear *10*, describes complex path *a* having nine points of self-intersection. When gear *1* rotates at uniform velocity, gear *5* with carrier *9* rotates at nonuniform velocity. Point *A* of link *2* travels along path *a* and periodically pushes moving paper strip *4* against knife blade *3* which cuts the strip.

www.dmg-lib.org

SECTION FIFTEEN

Pin-Gear Mechanisms

PG

1. General-Purpose Three-Link Mechanisms 3L (2577 through 2591)
2. General-Purpose Multiple-Link Mechanisms ML (2592 through 2595)
3. Dwell Mechanisms D (2596 through 2622)
4. Geneva Wheel Mechanisms GW (2623 through 2652)
5. Sorting and Feeding Mechanisms SF (2653 and 2654)
6. Mechanisms of Other Functional Devices FD (2655 through 2659)

2577	REULEAUX EXTERNAL PIN-WHEEL GEARING	PG 3L

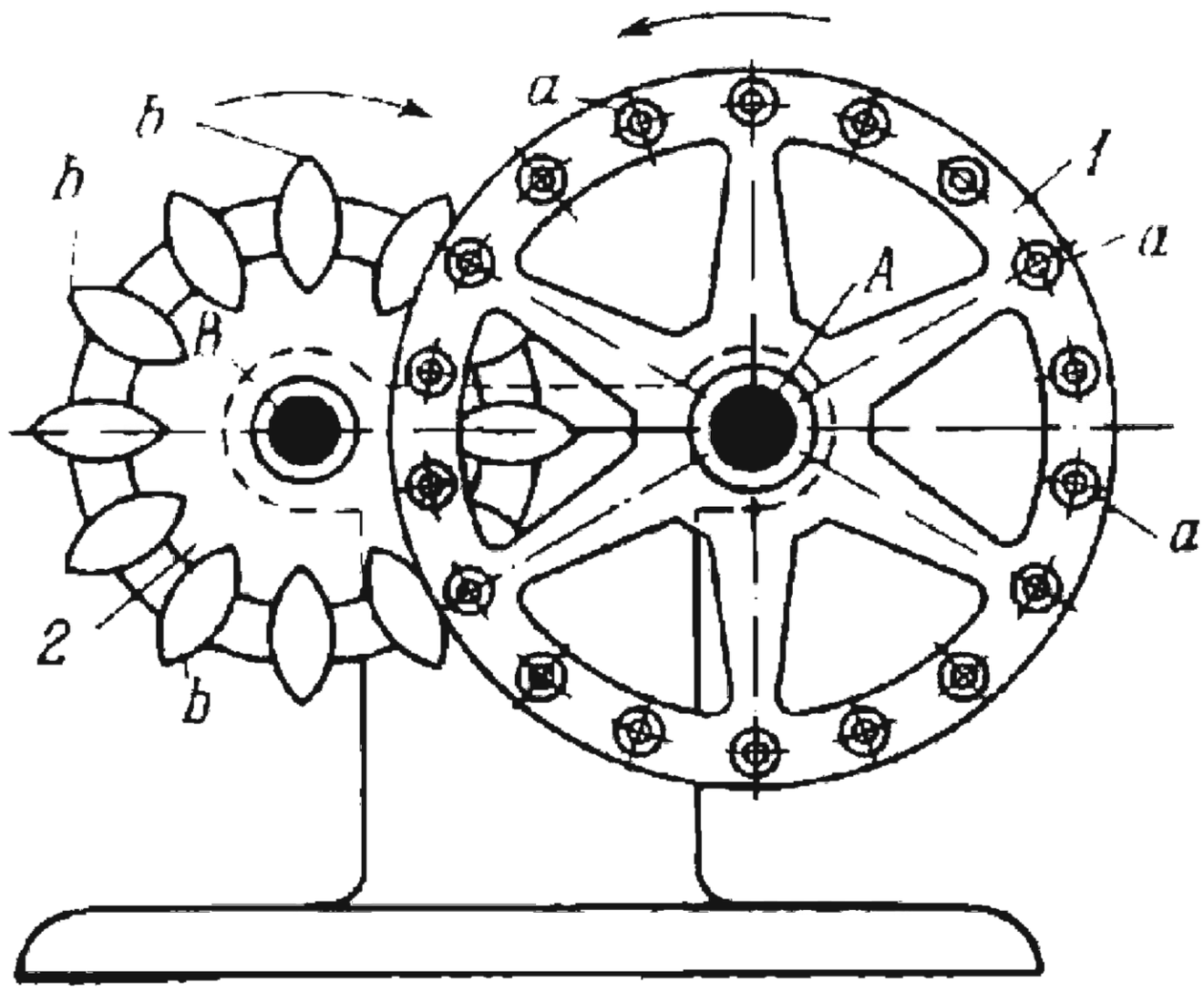

Pin wheel *1* rotates about fixed axis *A* and carries pins *a* which mesh with lens-shaped teeth *b* of wheel *2*. Wheel *2* rotates about fixed axis *B*. The profiles of teeth *b* are along curves which are equidistant from a portion of a prolate epicycloid. When driving pin wheel *1* rotates at uniform velocity, driven wheel *2* also rotates at uniform velocity. The transmission ratio from wheel *1* to wheel *2* is

$$i_{12}=\frac{\omega_1}{\omega_2}=-\frac{z_2}{z_1}$$

where ω_1 and ω_2 are the angular velocities of wheels *1* and *2*, z_1 is the number of pins *a* and z_2 is the number of teeth *b*. Wheels *1* and *2* rotate in opposite directions.

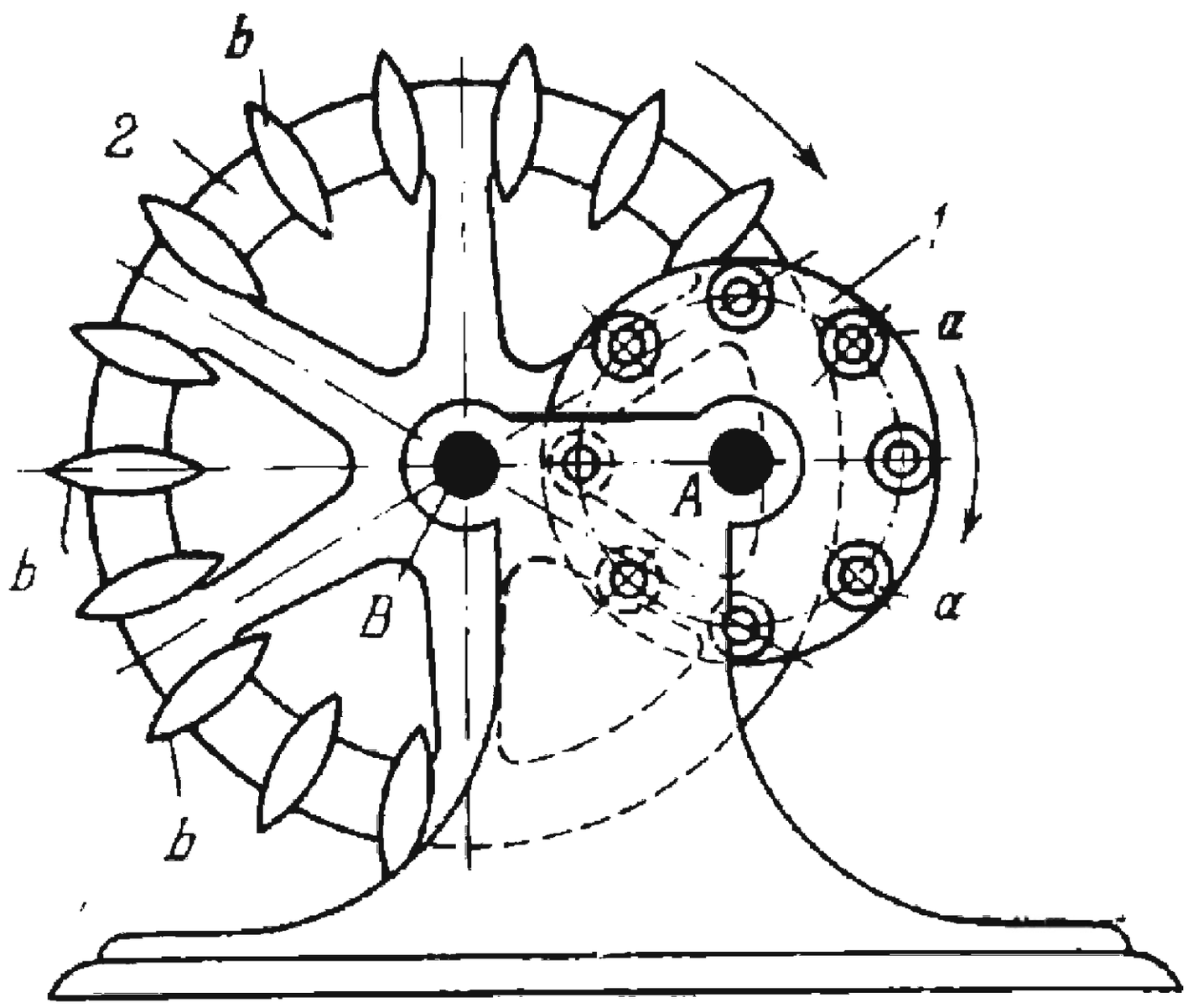

Pin wheel *1* rotates about fixed axis *A* and has pins *a* which mesh with lens-shaped teeth *b* of wheel *2*. Wheel *2* rotates about fixed axis *B*. The profiles of teeth *b* are along curves which are equidistant from a portion of a prolate hypocycloid. When driving pin wheel *1* rotates at uniform velocity, driven wheel *2* also rotates at uniform velocity. The transmission ratio from wheel *1* to wheel *2* is

$$i_{12} = \frac{\omega_1}{\omega_2} = \frac{z_2}{z_1}$$

where ω_1 and ω_2 are the angular velocities of wheels *1* and *2*, z_1 is the number of pins *a*, and z_2 is the number of teeth *b*.

Wheels *1* and *2* rotate in the same direction.

2579	LEVER-GEAR PIN-RACK GEARING	PG 3L

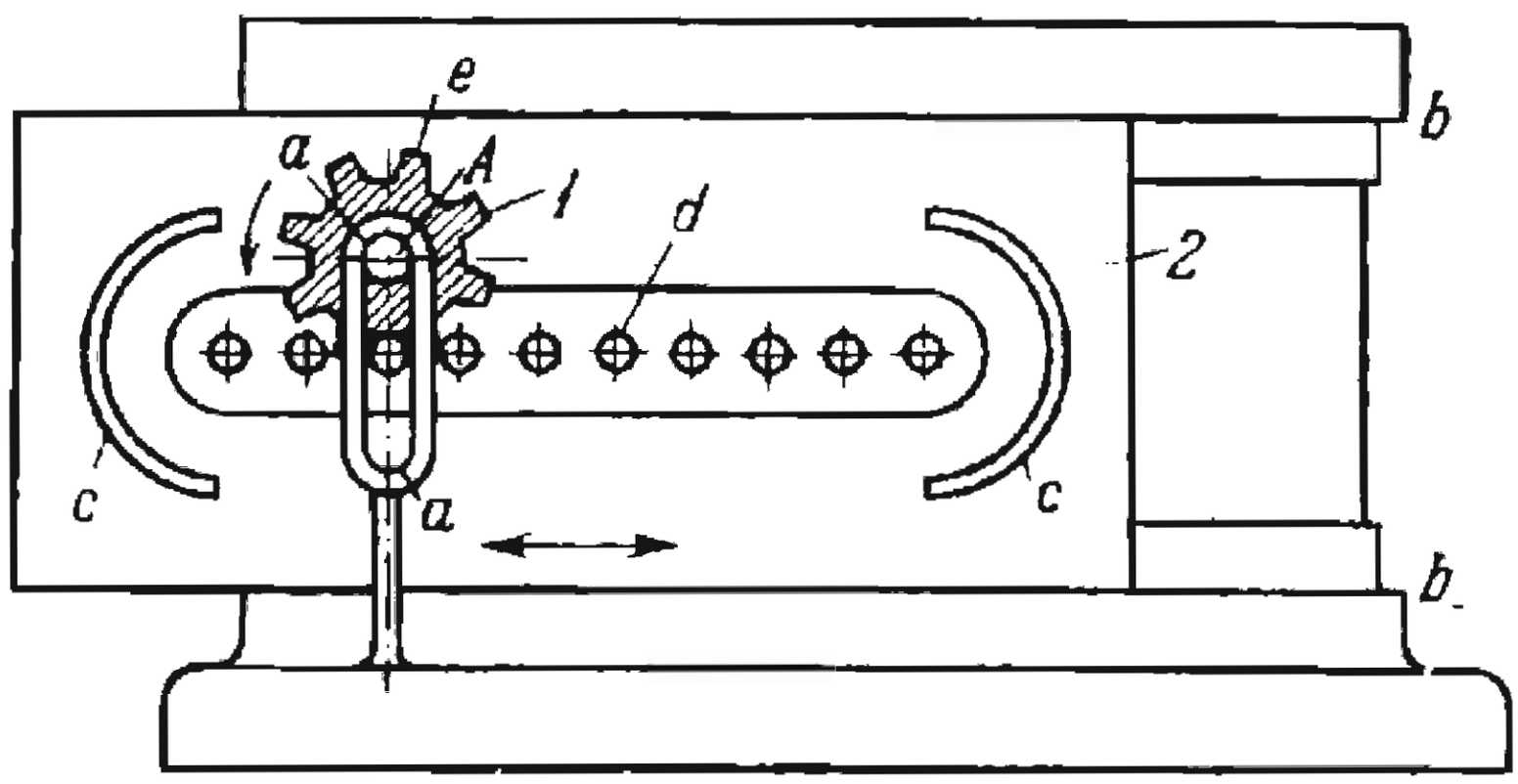

Toothed gear *1* rotates about axis *A* and meshes with pin rack *2* having pins *d*. Trunnion *A* of gear *1* slides along fixed slot *a-a*. When. driving gear *1* rotates continuously in one direction at uniform velocity, driven rack *2* reciprocates at uniform velocity along fixed guides *b-b*. Rack *2* is reversed by circular lugs *c* which guide trunnion *A*. While gear *1* is passing from its upper to its lower position and vice versa, rack *2* travels with nonuniform velocity. The profiles of teeth *e* of gear *1* are along curves which are equidistant from an involute of a circle.

2580	LEVER-GEAR PIN-RACK GEARING	PG 3L

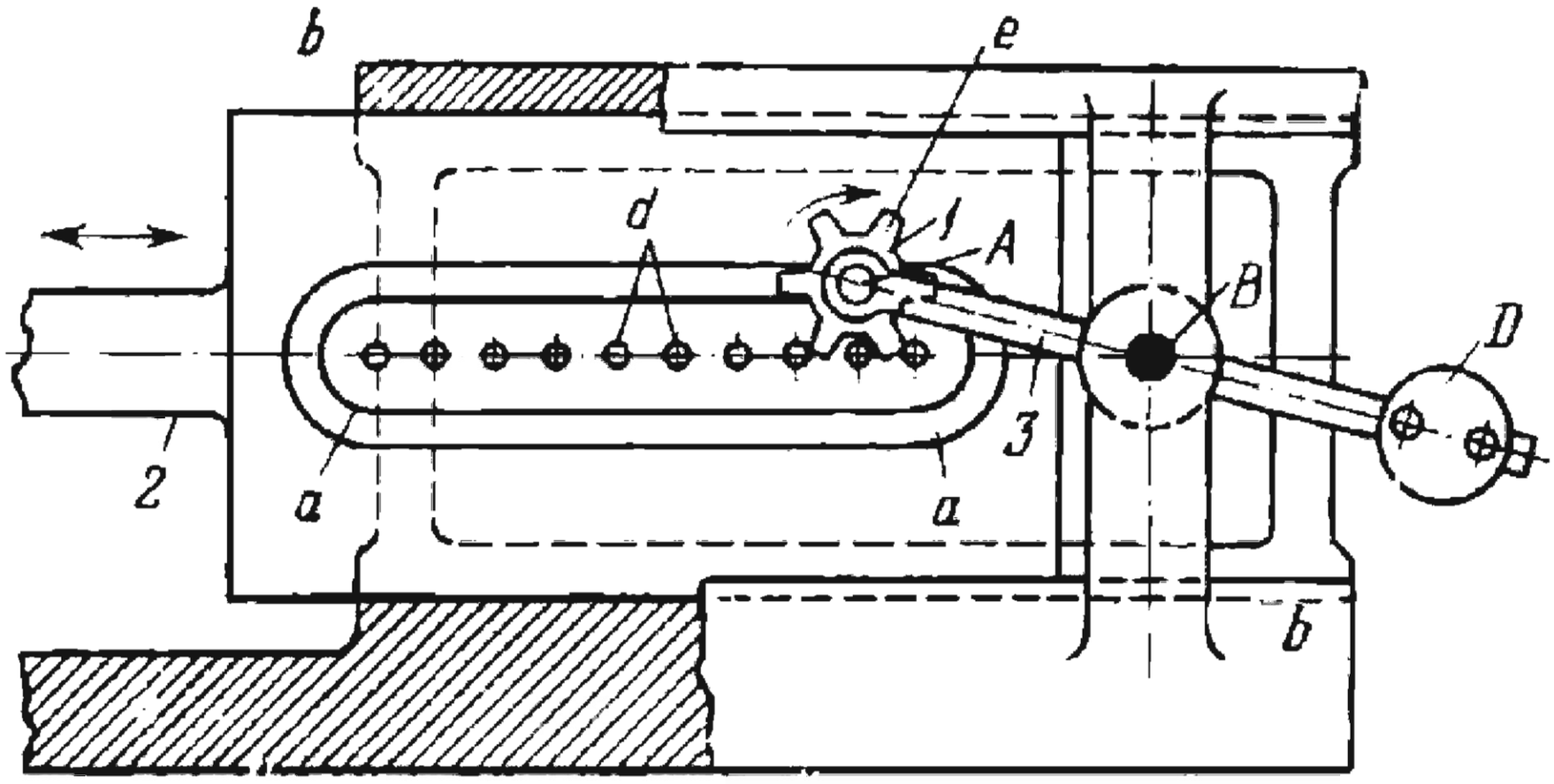

Toothed gear *1* rotates about axis *A* and meshes with pin rack *2* having pins *d*. Trunnion *A* of gear *1* slides along slot *a-a* of rack *2*. The slot has two straight and two semicircular portions. Gear *1* is connected by turning pair *A* to lever *3* which turns about fixed axis *B*. When driving gear *1* rotates continuously in one direction at uniform velocity, driven rack *2* reciprocates at uniform velocity in fixed guides *b-b*. Rack *2* is reversed by the semicircular portions of slot *a-a*. While gear *1* is passing from its upper to its lower position and vice versa, rack *2* travels with nonuniform velocity. The profiles of teeth *e* of gear *1* are along curves which are equidistant to an involute of a circle.

Weight *D* counterbalances the weight of gear *1*.

2581 PIN-WHEEL COMPLEX RACK GEARING

PG 3L

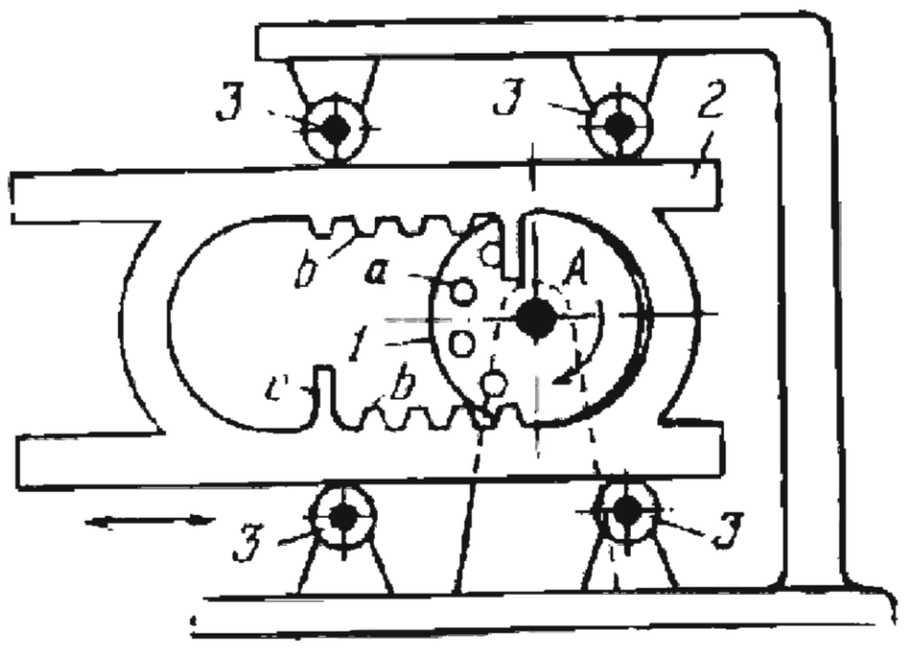

Pin wheel *1* with pins *a* rotates about fixed axis *A* and alternately meshes with the lower and upper parts of complex rack *2* which has teeth *b* and straight and semicircular portions. Rack *2* travels between guide rollers *3*. When driving pin wheel *1* rotates continuously in one direction at uniform velocity, driven rack *2* reciprocates at uniform velocity while pins *a* mesh with teeth *b*, and at nonuniform velocity according to a sine law while pins *a* mesh with elongated teeth *c*.

2582 PIN-WHEEL SLOTTED-LINK MECHANISM

PG 3L

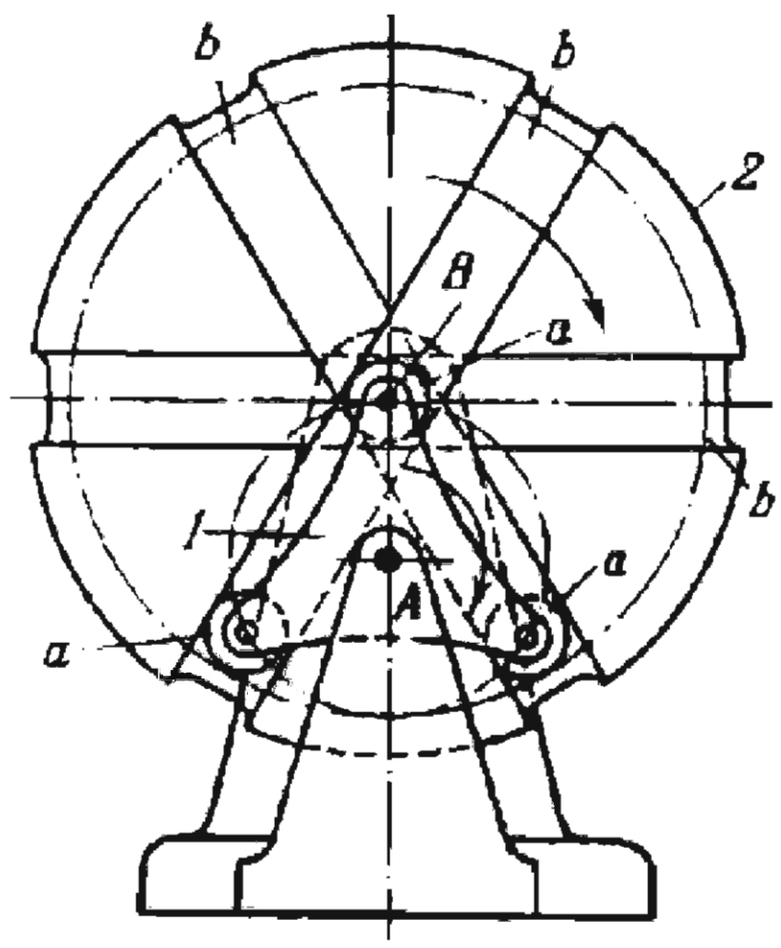

Link *1* rotates about fixed axis *A* and carries three pins *a* at equal distances from axis *A* and located symmetrically at angles of 120°. Pins *a* slide in six straight radial slots *b* of link *2* which rotates about fixed axis *B*. The angles between the axes of adjacent slots equal 60°. When driving pin wheel *1* rotates continuously at uniform velocity, driven link *2* rotates at nonuniform velocity. The average transmission ratio from pin wheel *1* to link *2* is $i_{12} = 2$. Links *1* and *2* rotate in the same direction.

2583	PIN-WHEEL-RACK MECHANISM WITH RACK DWELLS	PG 3L

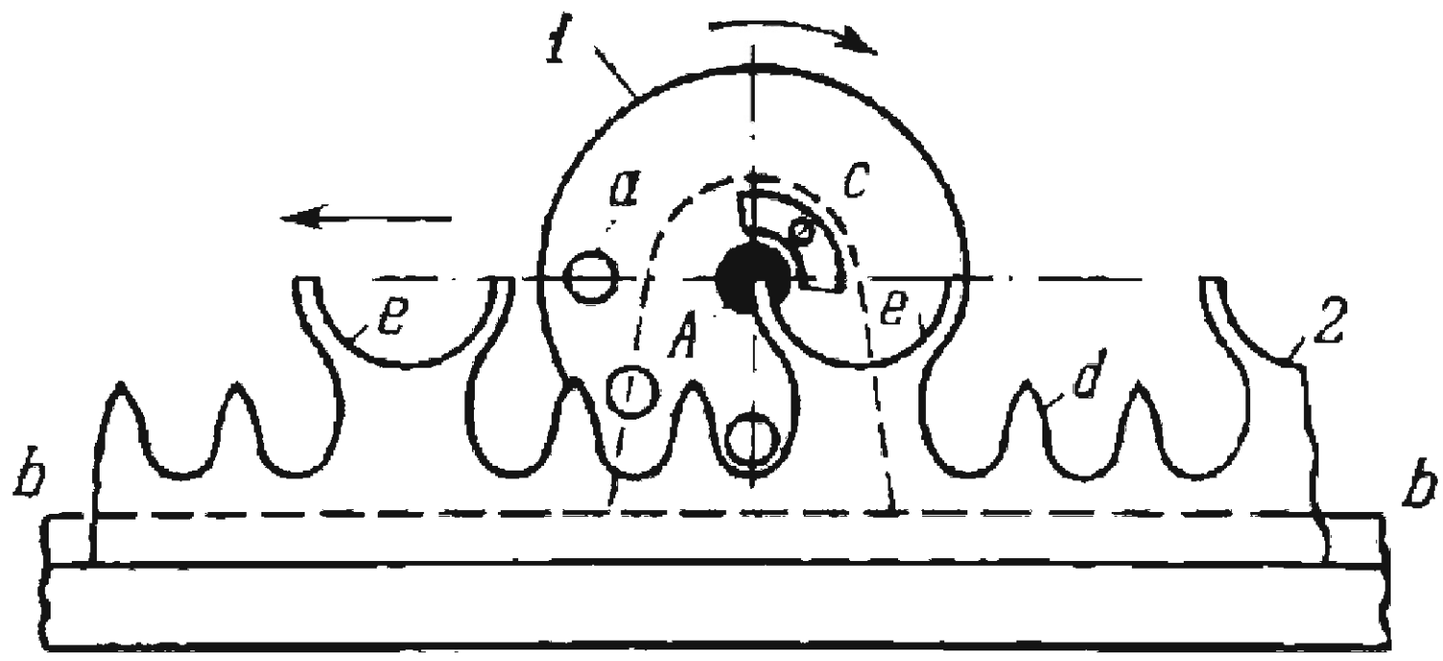

Pin wheel *1* with pins *a* rotates about fixed axis *A* and meshes with teeth *d* of rack *2* which slides along fixed guides *b-b*. The profiles of teeth *d* of rack *2* are along curves which are equidistant from a cycloid of a circle. Wheel *1* has circular locking lug *c* and rack *2* has concave surfaces *e*. When driving pin wheel *1* rotates at uniform velocity, driven rack *2* travels at uniform velocity but has dwells. During the dwells, lug *c* engages concave surfaces *e* to prevent unintentional motion of the rack.

2584	CAM-PIN-WHEEL MECHANISM WITH PIN-WHEEL DWELLS	PG 3L

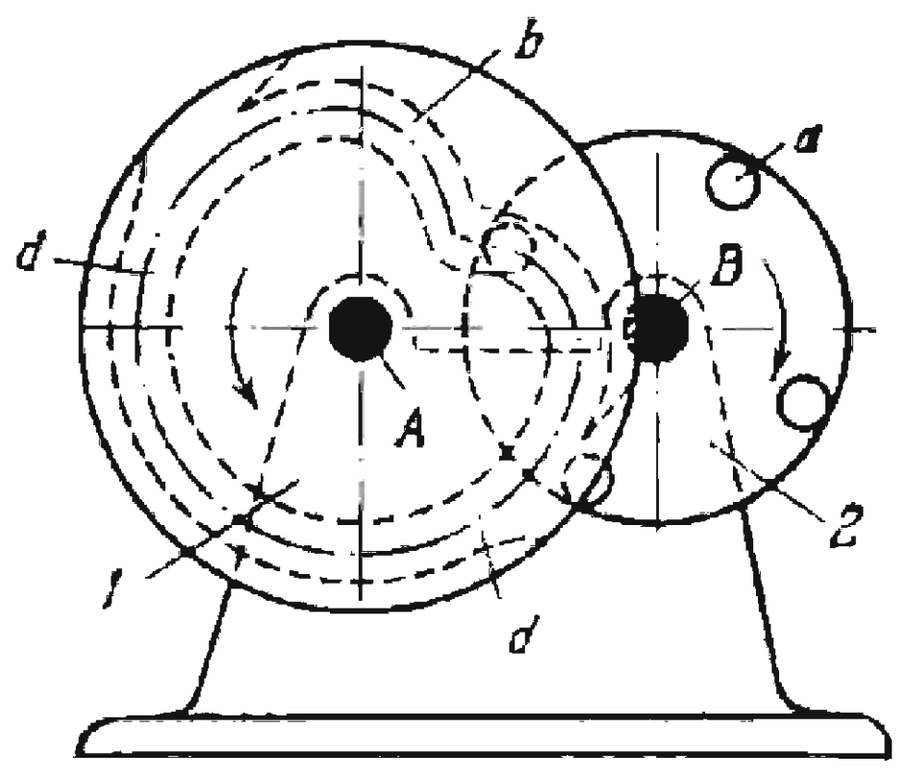

Face cam *1* rotates about fixed axis *A* and has cam slot *b* of which portion *d-d* is along a circular arc described from centre *A*. Slot *b* meshes with four pins *a* of pin wheel *2* which rotates about fixed axis *B*. The axes of pins *a* are at equal distances from centre *B* and are located symmetrically. In one revolution of driving face cam *1*, pin wheel *2* turns through 90°. Wheel *2* has a dwell during the part of the cycle when circular portion *d-d* slides along two adjacent pins *a*, thereby preventing unintentional rotation of pin wheel *2*.

2585	SPIRAL-WHEEL PIN-RACK MECHANISM	PG 3L

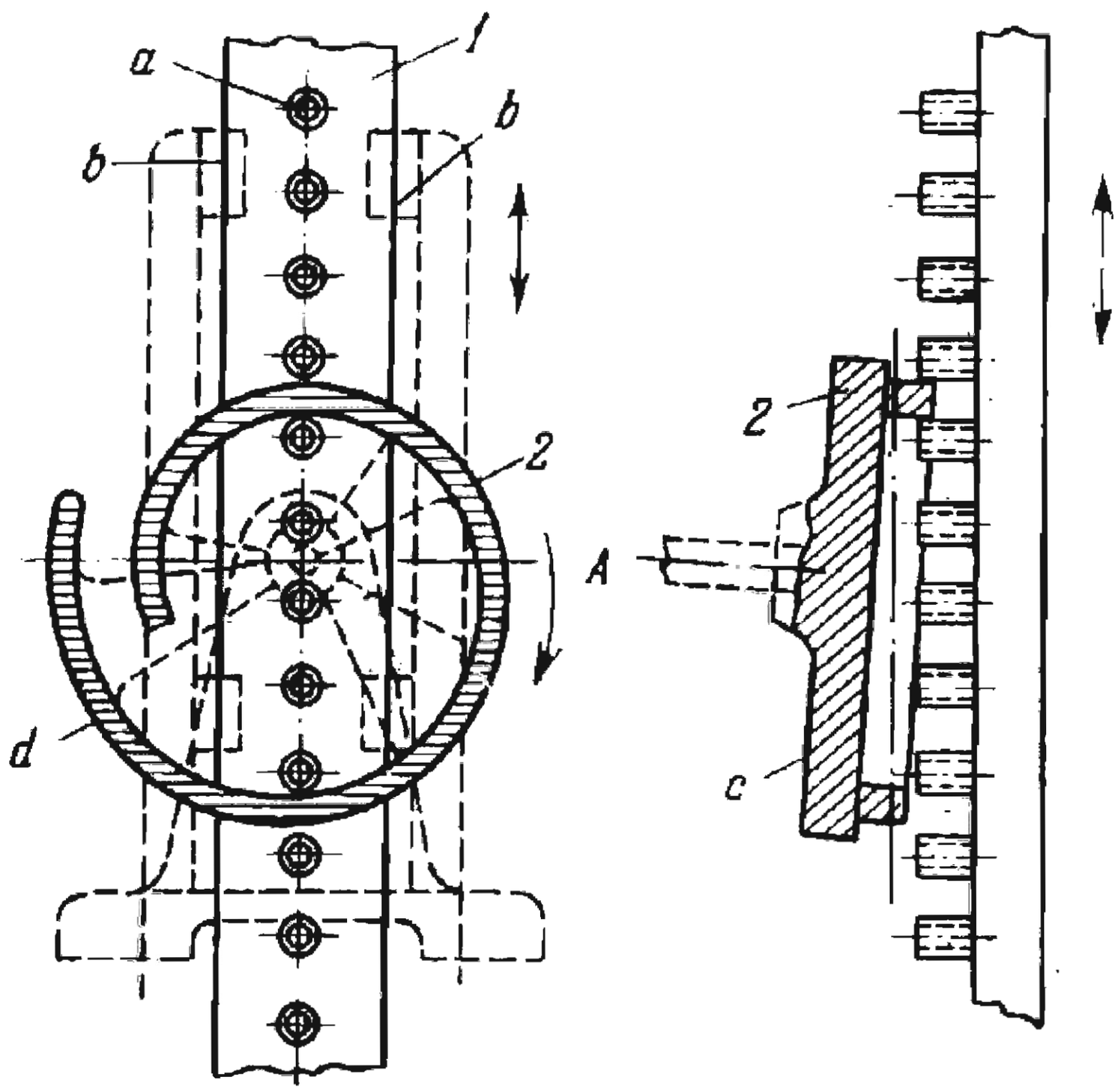

Pin rack *1* with pins *a* slides along fixed guides *b-b*. Wheel *2* rotates about fixed axis *A* and has one spiral tooth *d* located on disk *c*. Axis *A* is inclined at a small angle to a normal to the plane of rack *1*. When spiral wheel *2* rotates at uniform velocity, rack *1* travels with nonuniform velocity with a displacement of one pin to each revolution of wheel *2*.

2586	PIN-WHEEL SPATIAL GEARING	PG 3L

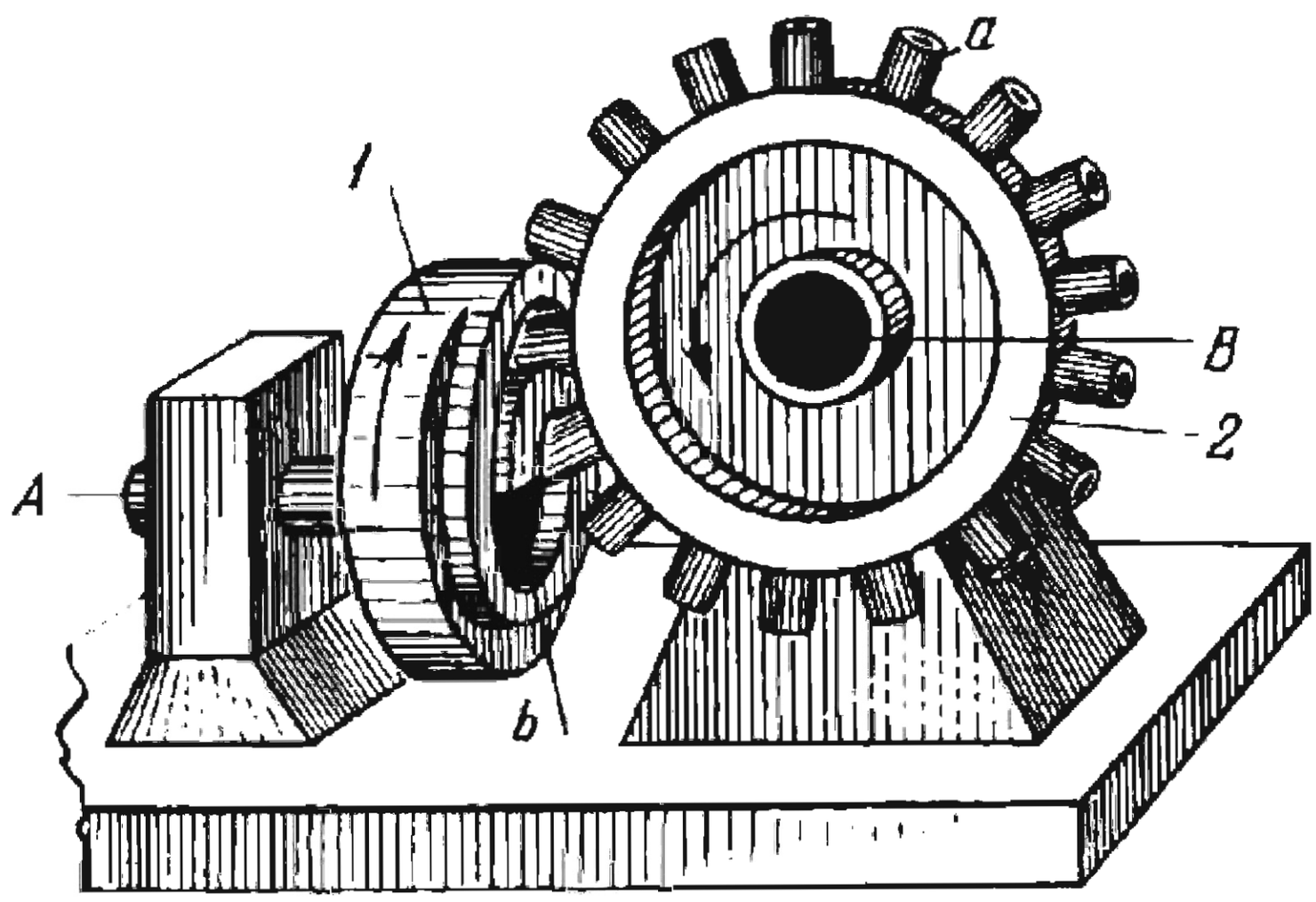

Wheel *1* rotates about fixed axis *A* and has spiral slot *b* which meshes with pins *a* of pin wheel *2*. Wheel *2* rotates about fixed axis *B*. The mechanism transmits continuous rotation between two nonintersecting (crossed) perpendicular axes.

2587	PIN-WHEEL FACE GEARING	PG 3L

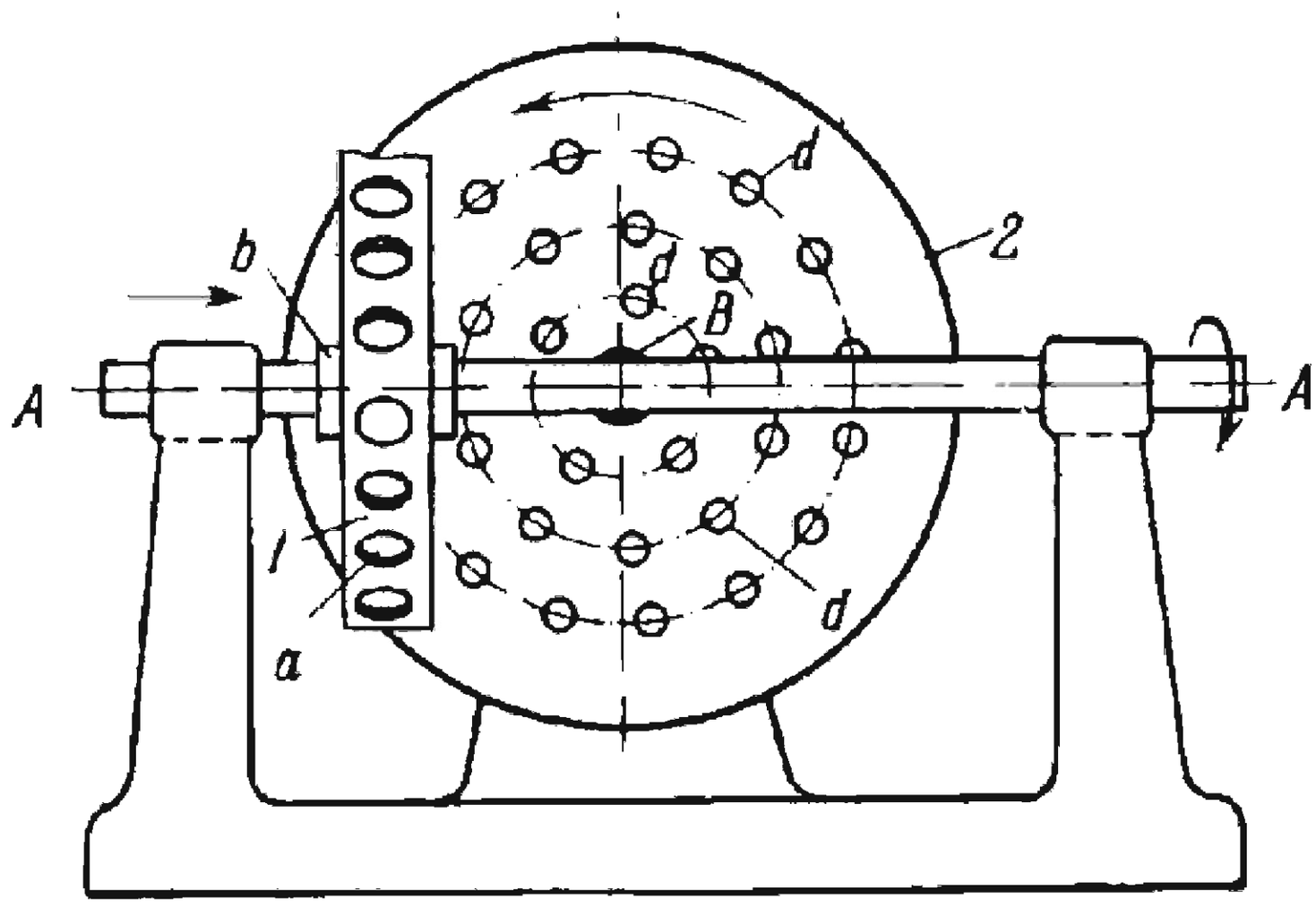

Wheel *1* rotates about fixed axis *A* and has holes *a* which engage pins *d* of pin wheel *2*. Wheel *2* rotates about fixed axis *B*. Pins *d* are located on the end face of wheel *2* in three concentric circles. By shifting hub *b* of wheel *1* along axis *A*, the wheel can be brought into mesh with the pins of any of the three circles. In this way, when wheel *1* rotates at constant speed, wheel *2* can have either of three different speeds. When wheel *1* is shifted beyond point *B* to the right, rotation of wheel *2* is reversed. The transmission ratio from wheel *1* to wheel *2* is

$$i_{12}=\frac{\omega_1}{\omega_2}=\frac{z_2}{k_1}$$

where k_1 is the number of holes in wheel *1* and z_2 is the number of pins on the circle with which wheel *1* meshes.

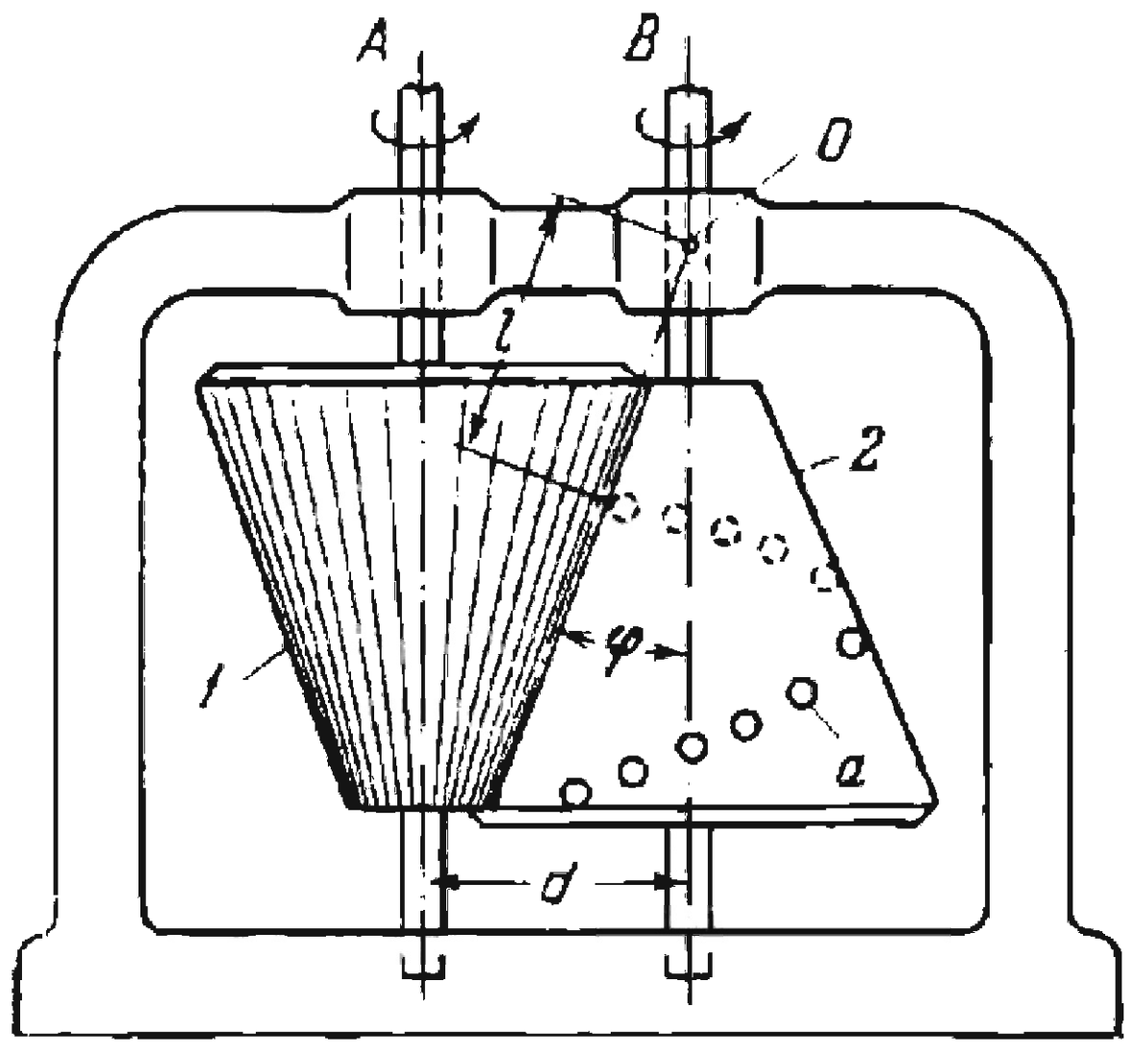

Tapered gear *1* rotates about fixed axis *A* and has teeth whose generating lines are parallel to the elements of the pitch cone of gear *1*. Tapered pin wheel *2* rotates about fixed axis *B* and has pins *a* located along a helix of the pitch cone of wheel *2*. When driving pin wheel *2* rotates, pins *a* mesh with the teeth of gear *1*. The mechanism transmits rotation from wheel *2* to gear *1*, on parallel axes *A* and *B*, with a variable transmission ratio equal to

$$i_{21} = \frac{\omega_2}{\omega_1} = \frac{d - l \sin \varphi}{l \sin \varphi}$$

where ω_1 and ω_2 are the angular velocities of gear *1* and wheel *2*, *d* is the distance between axes *A* and *B*, φ is one half of the included angle of the pitch cones, and *l* is the distance from apex *O* of cone *2* to the centre of pins *a*.

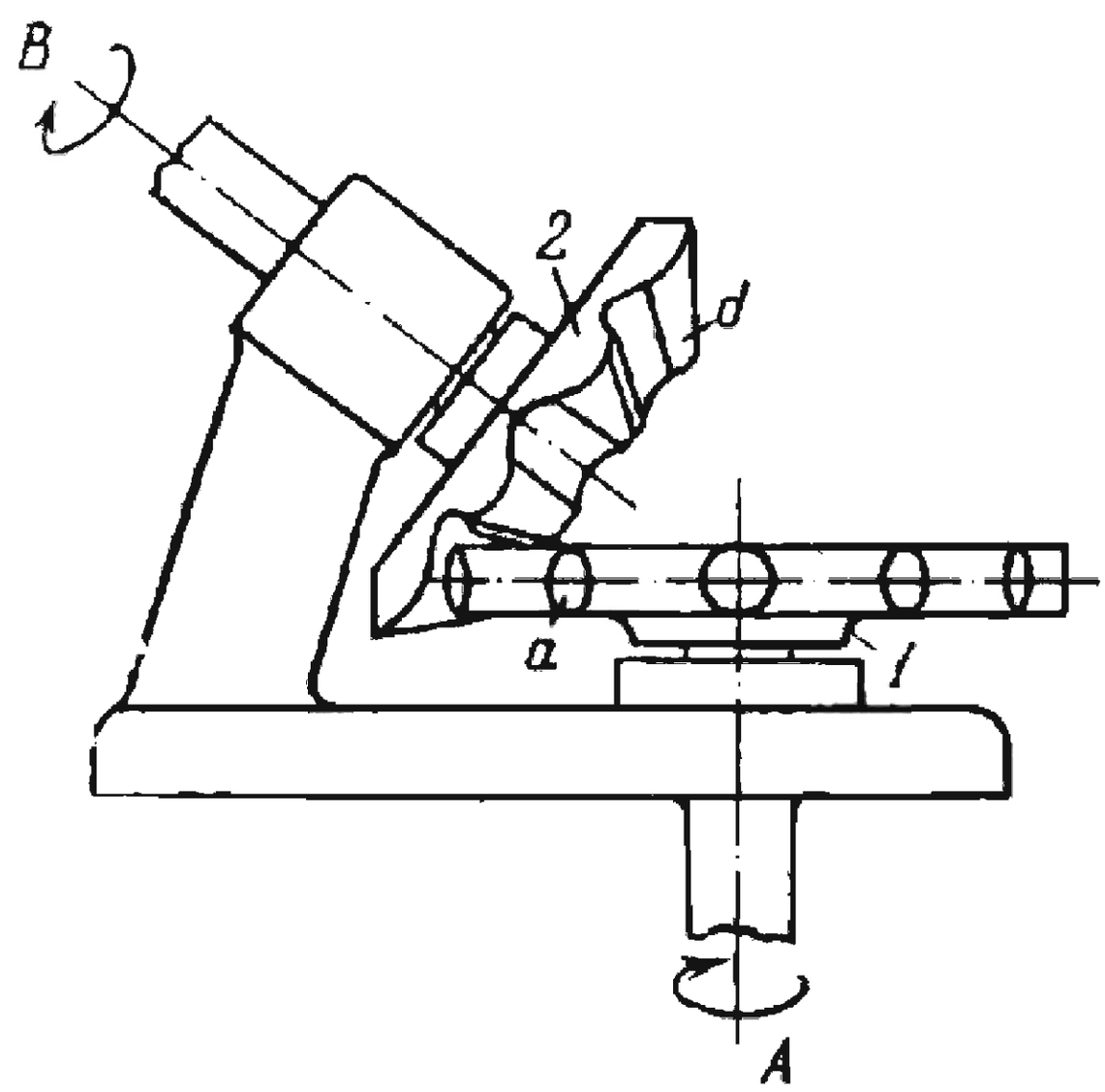

Pin wheel *1* rotates about fixed axis *A* and carries pins *a* which mesh with teeth *d* of bevel gear *2*. Gear *2* rotates about fixed axis *B*. Pin wheel *1* is designed with the axes of pins *a* lying in a single plane. The mechanism transmits rotation between intersecting axes *A* and *B*. The transmission ratio from wheel *1* to gear *2* is

$$i_{12}=\frac{\omega_1}{\omega_2}=\frac{z_2}{k}$$

where ω_1 and ω_2 are the angular velocities of wheel *1* and gear *2*, z_2 is the number of teeth *d* of gear *2*, and *k* is the number of pins *a* of wheel *1*.

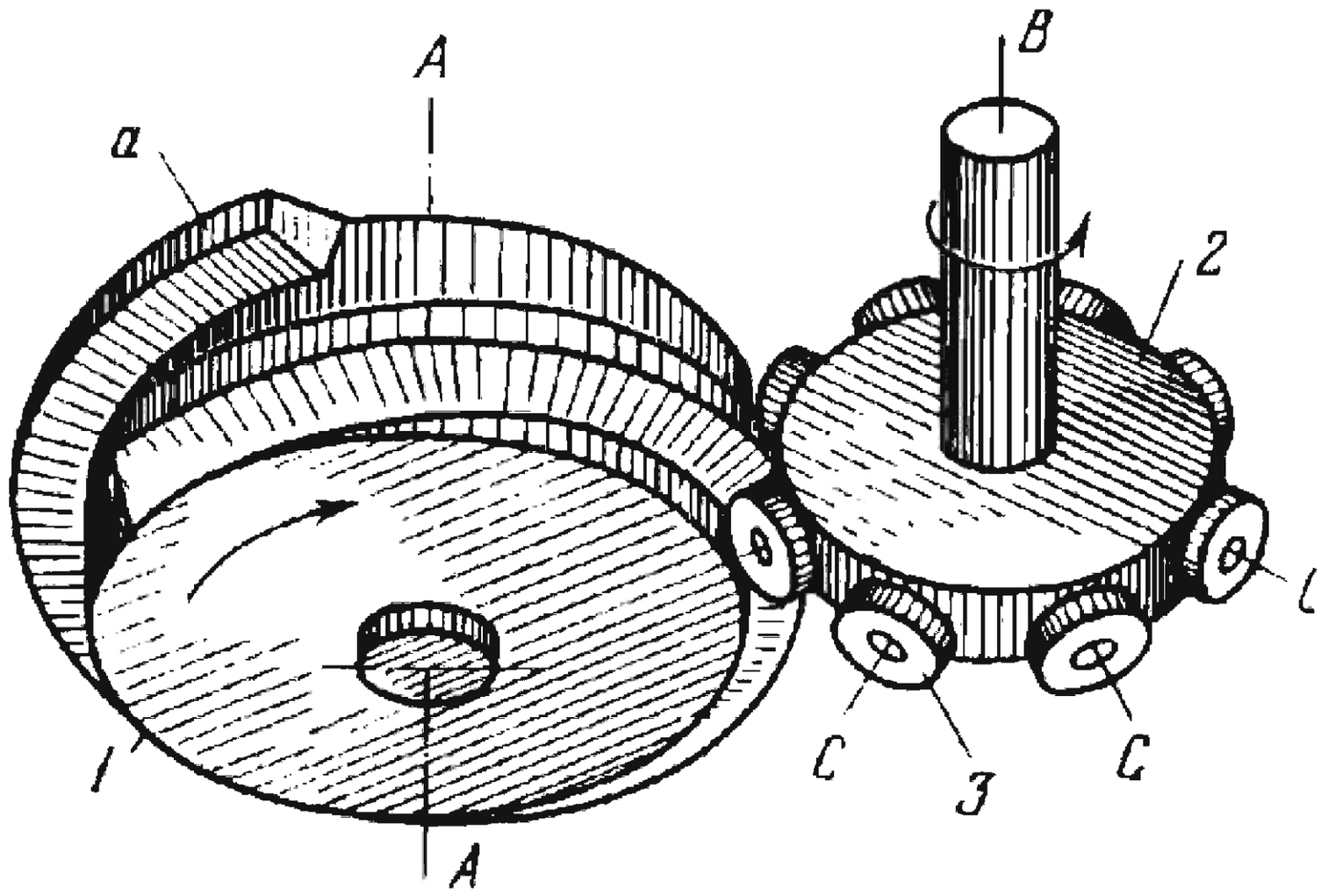

Wheel *1*, designed as a worm, rotates about fixed axis *A* and has helical tooth *a* which meshes with rollers *3* of link *2*. Rollers *3* rotate freely about axes *C* of pin wheel *2* which rotates about fixed axis *B*. Axes *A* and *B* cross at an angle of 90°. The transmission ratio from worm *1* to pin wheel *2* is

$$i_{12}=\frac{\omega_1}{\omega_2}=\frac{n_1}{n_2}=-z_3$$

where ω_1, ω_2, n_1 and n_2 are the angular velocities and speeds (rpm) of worm *1* and pin wheel *2*, and z_3 is the number of rollers *3* mounted on pin wheel *2*.

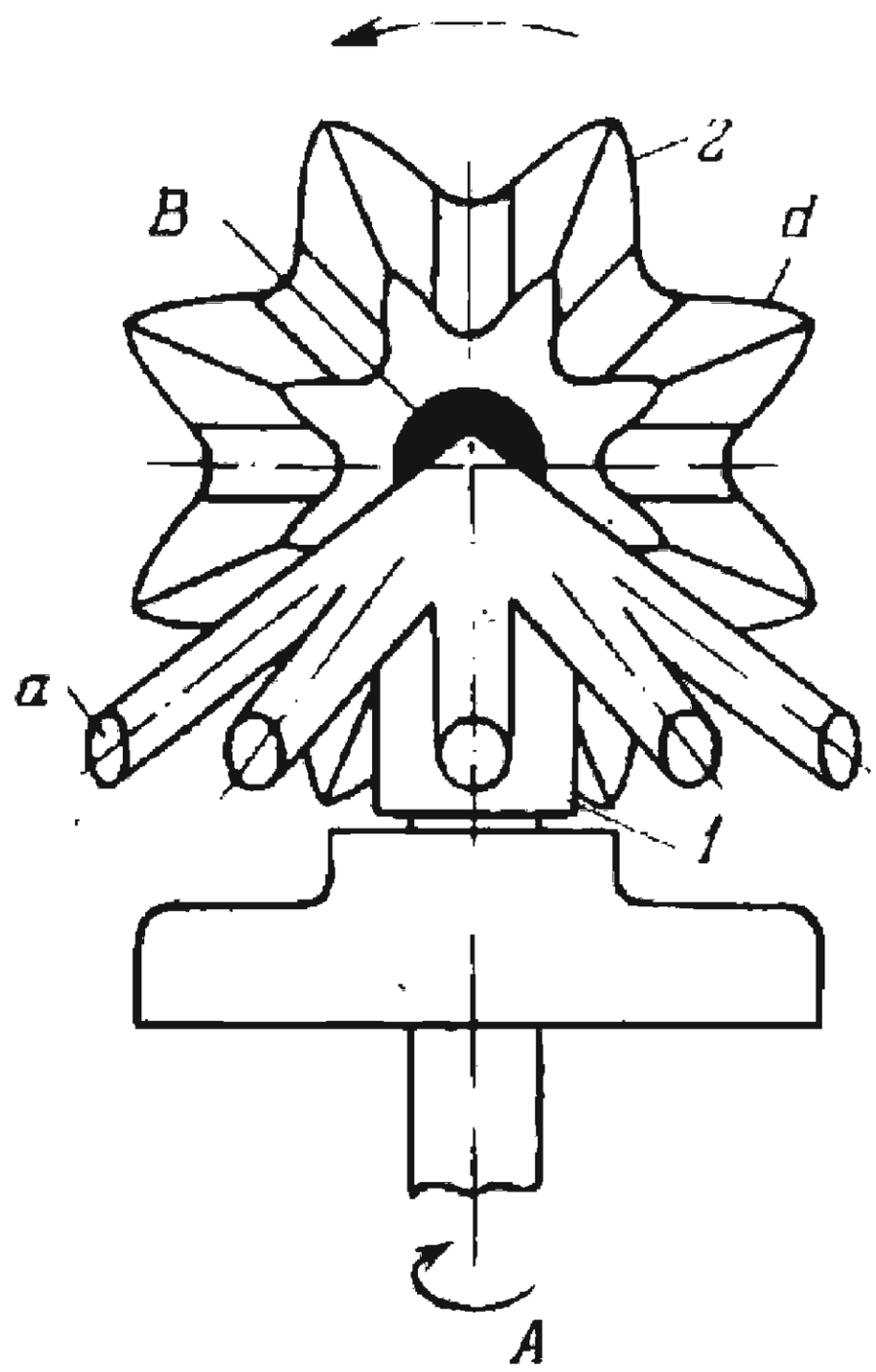

Bevel pin wheel *1* rotates about fixed axis *A* and carries pins *a* which mesh with teeth *d* of bevel gear *2*. Gear *2* rotates about fixed axis *B*. The mechanism transmits rotation between intersecting axes *A* and *B*. The transmission ratio between wheel *1* and gear *2* is

$$i_{12}=\frac{\omega_1}{\omega_2}=\frac{z_2}{k}$$

where ω_1 and ω_2 are the angular velocities of wheel *1* and gear *2*, z_2 is ihe number of teeth *d* of gear *2* and *k* is the number of pins *a* of wheel *1*.

2592	PIN-WHEEL INTERNAL PLANETARY MECHANISM	PG ML

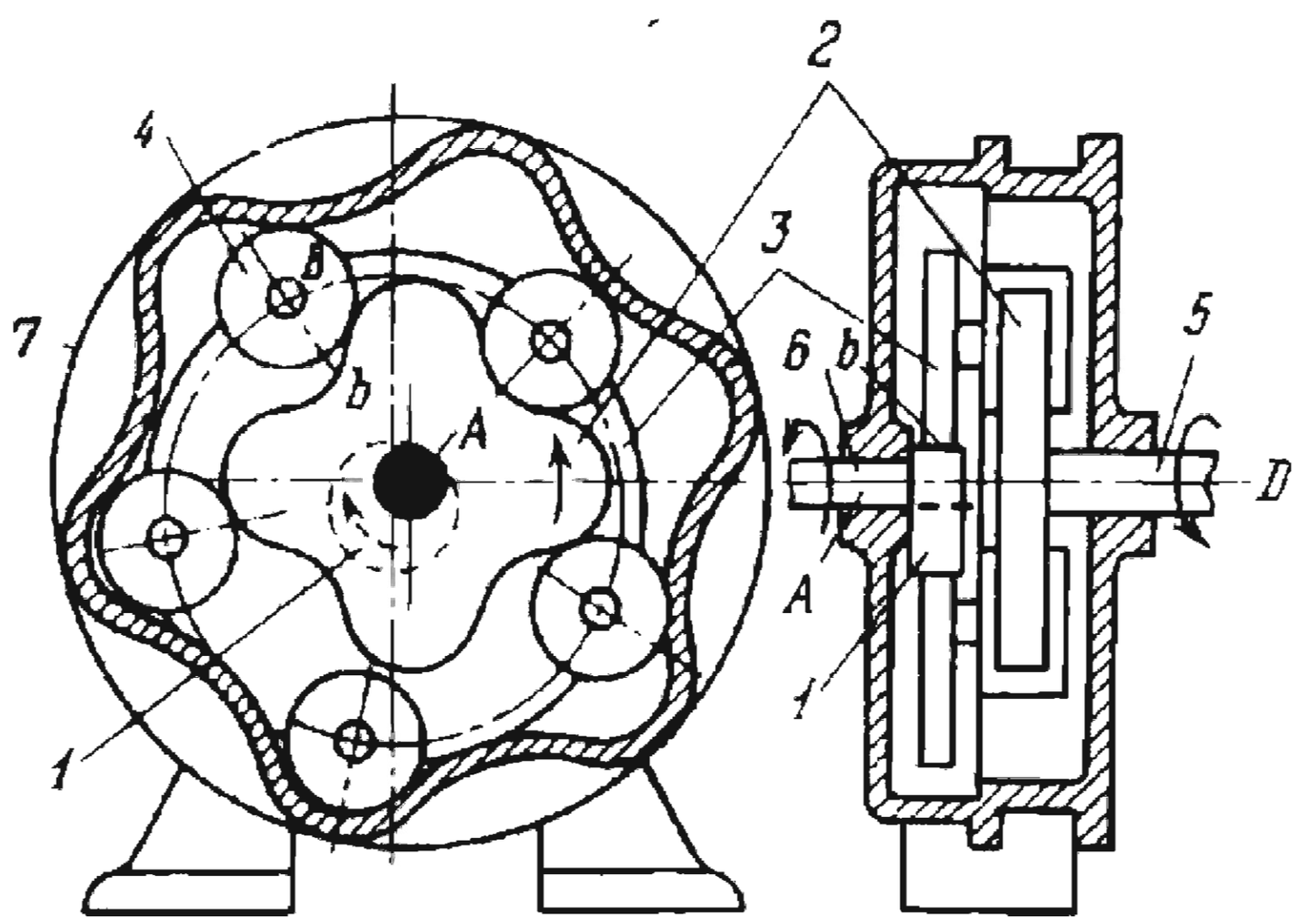

Round eccentric *1* rotates about fixed axis *A* of shaft *6* and is encircled by collar *b* of pin wheel *3* having pins *4* which rotate freely about axes *B* of wheel *3*. Pins *4* mesh with internal engagement with fixed wheel *7* and with external engagement with wheel *2* which rotates about fixed axis *D* of shaft *5*. The speed n_5 (in rpm) of shaft *5* is related to the speed n_6 of shaft *6* by the equation

$$n_5 = -n_6 \frac{z_7 - z_2}{z_2}$$

where z_2 and z_7 are the numbers of teeth of gears *2* and *7*.

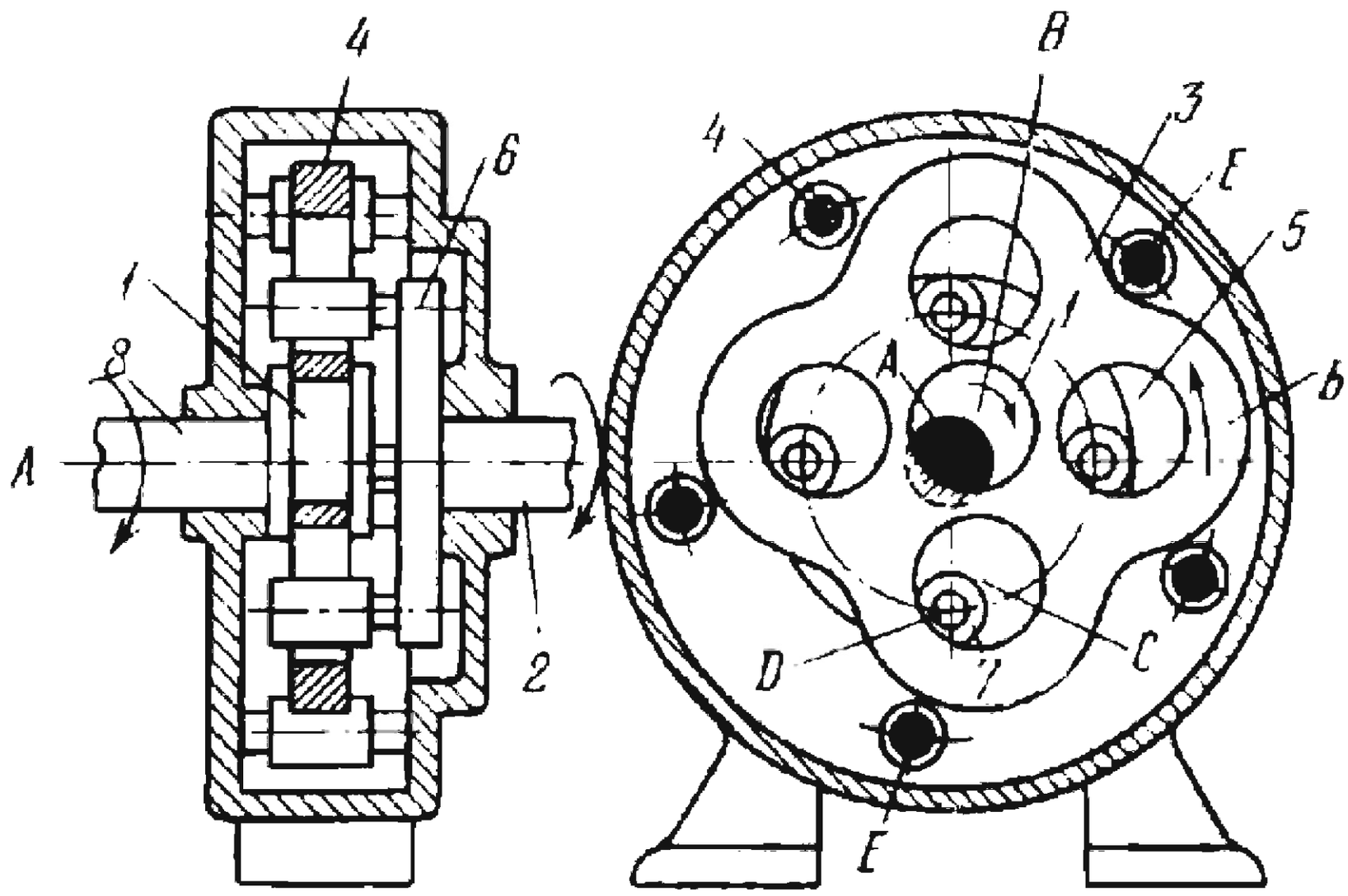

Round eccentric *1* with shaft *8* rotate about fixed axis *A*. Point *B* is the geometric centre of eccentric *1*. Washer *3* encircles eccentric *1* and has four teeth *b* which mesh with pins *4*. Pins *4* rotate freely about fixed axes *E*. Washer *6* is rigidly attached to driven shaft *2* which rotates about axis *A*. Washer *6* has pins *7* which rotate freely about axes *D* of washer *6* and roll around inside round holes *5* in washer *3* with their centres at points *C*. The dimensions of the links comply with the conditions: $\overline{AB} = \overline{DC}$ and $\overline{BC} = \overline{AD}$, i.e. figure *ABCD* is a parallelogram. When eccentric *1* rotates about axis *A*, washer *3* meshes with pins *4* and thereby drives shaft *2*. The transmission ratio from shaft *8* to shaft *2* is

$$i = \frac{z_4 - z_3}{z_3}$$

where z_4 is the number of pins *4* and z_3 is the number of teeth of washer *3*.

2594	PIN-WHEEL MECHANISM WITH A REVERSIBLE DRIVEN GEAR	PG ML

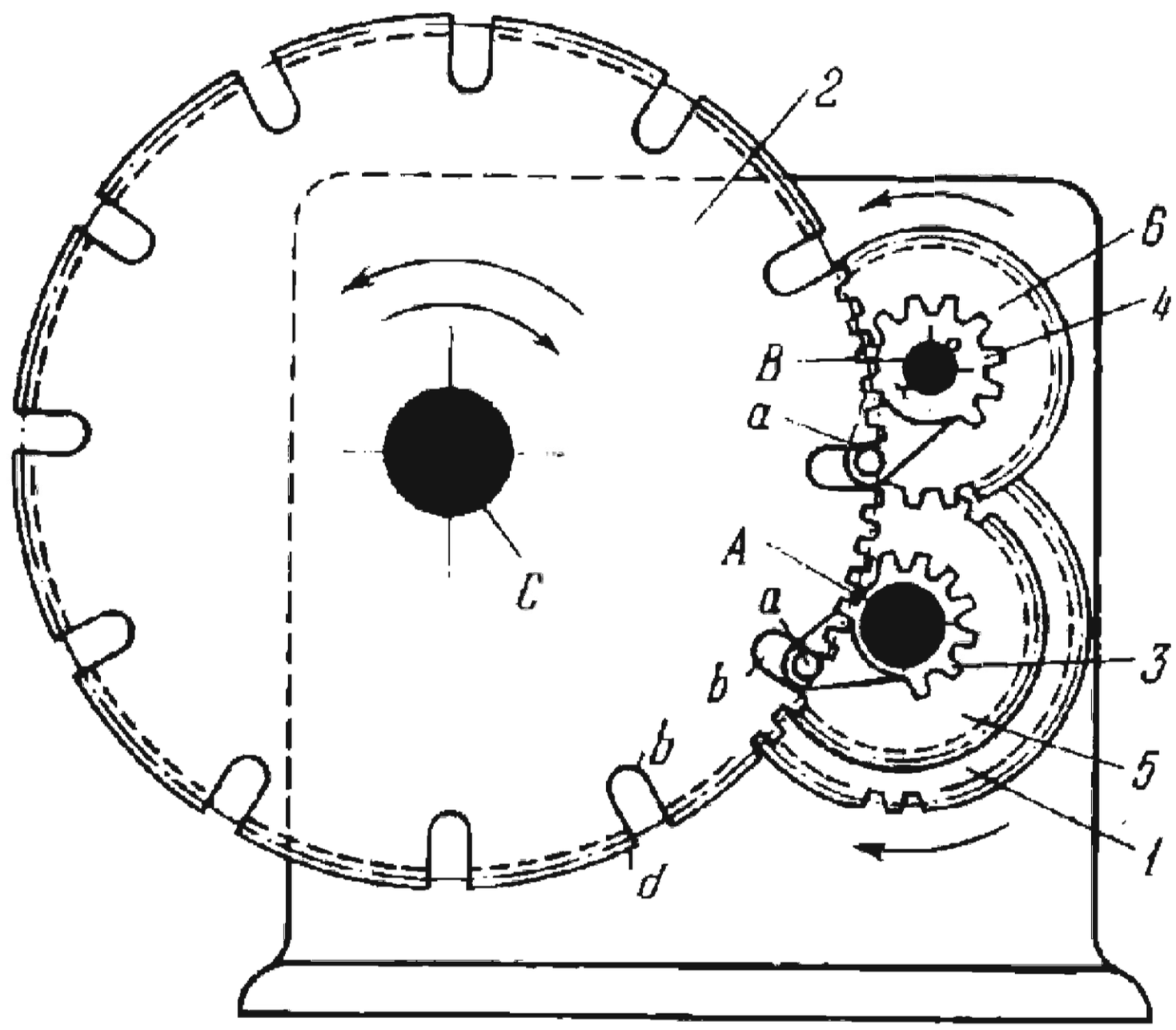

Gear *1* rotates about fixed axis *A* and meshes with a driving gear (not shown). By means of a sliding key (not shown) on shaft *A*, the shaft can be connected to either segment gear *3* or gear *5*. In the first case, rotation is transmitted to segment gear *3*, and in the second, to gear *6* and segment gear *4* which rotate about fixed axis *B*. Segment gears *3* and *4* are rigidly attached to drivers with pins *a* that engage slots *b* in slotted gear *2*. Gear *2* rotates about fixed axis *C* and its teeth *d* mesh with segment gears *3* and *4*. Depending on whether the sliding key engages either segment gear *3* or gear *5*, gear *2* rotates either counterclockwise or clockwise. While the teeth of segment gear *3* or *4* engage teeth *d* of gear *2*, the gear rotates at uniform velocity. When pin *a* of either segment gear slides along a slot *b* of gear *2*, the gear rotates at nonuniform velocity.

2595	PIN-WHEEL MECHANISM WITH A REVERSING DRIVEN WHEEL	PG ML

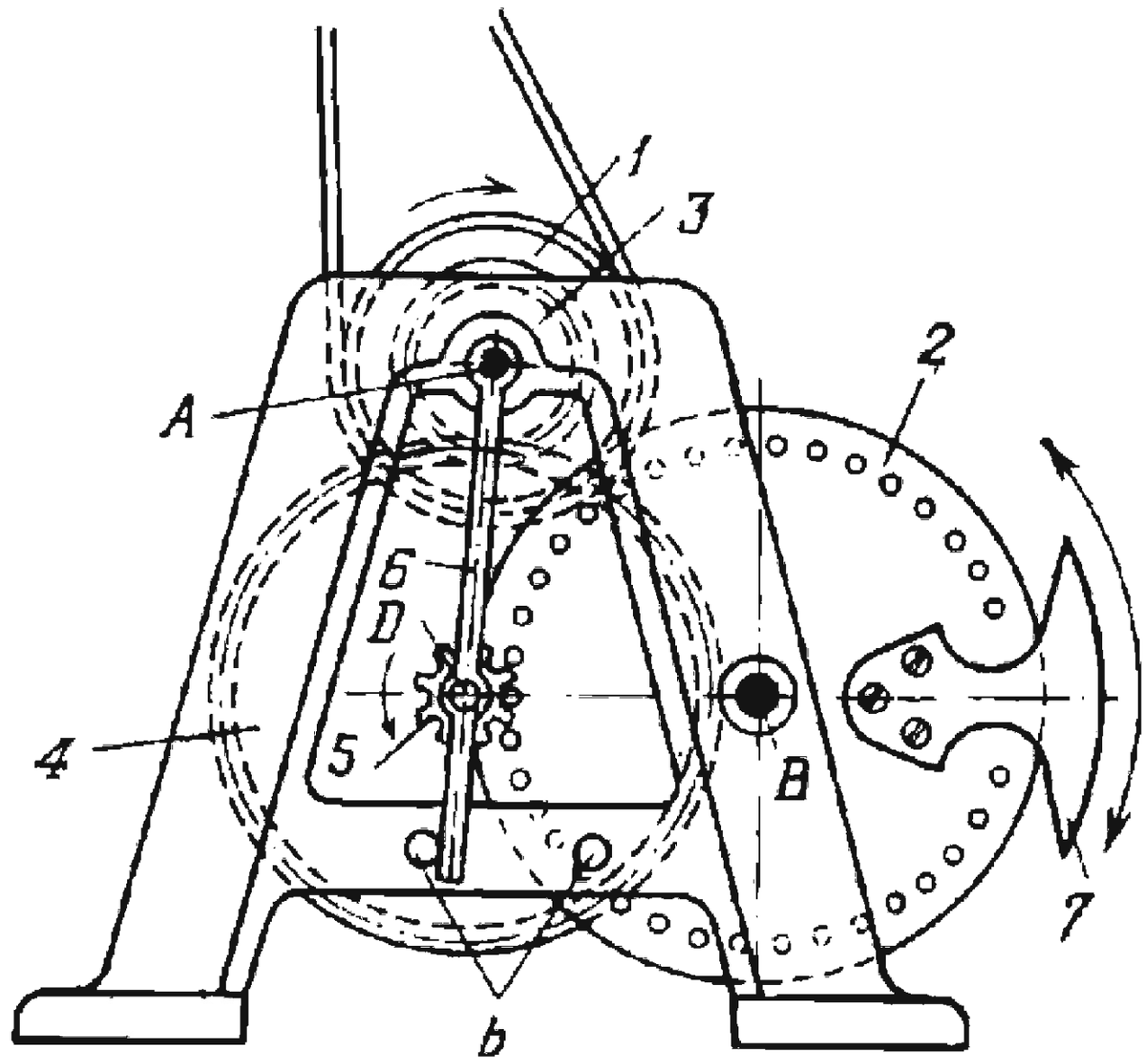

Driving pulley *1* is rigidly attached to gear *3* and they rotate together about fixed axis *A*. Gear *3* meshes with gear *4* which is rigidly attached to gear *5* and they rotate together about axis *D* of lever *6*. Lever *6* turns about axis *A*. Gear *5* meshes with alternating external and internal engagement with pin wheel *2*. When pulley *1* rotates continuously in one direction, gear *5* first rotates pin wheel *2* in one direction and then in the opposite direction. Reversal occurs after each angle of rotation of almost 360° in one direction when member *7* switches gear *5* from external to internal engagement (and vice versa) with pin wheel *2*. Stops *b* limit the swing of lever *6* during reversal.

2596	PIN-WHEEL-SPROCKET DWELL MECHANISM WITH EXTERNAL ENGAGEMENT	PG D

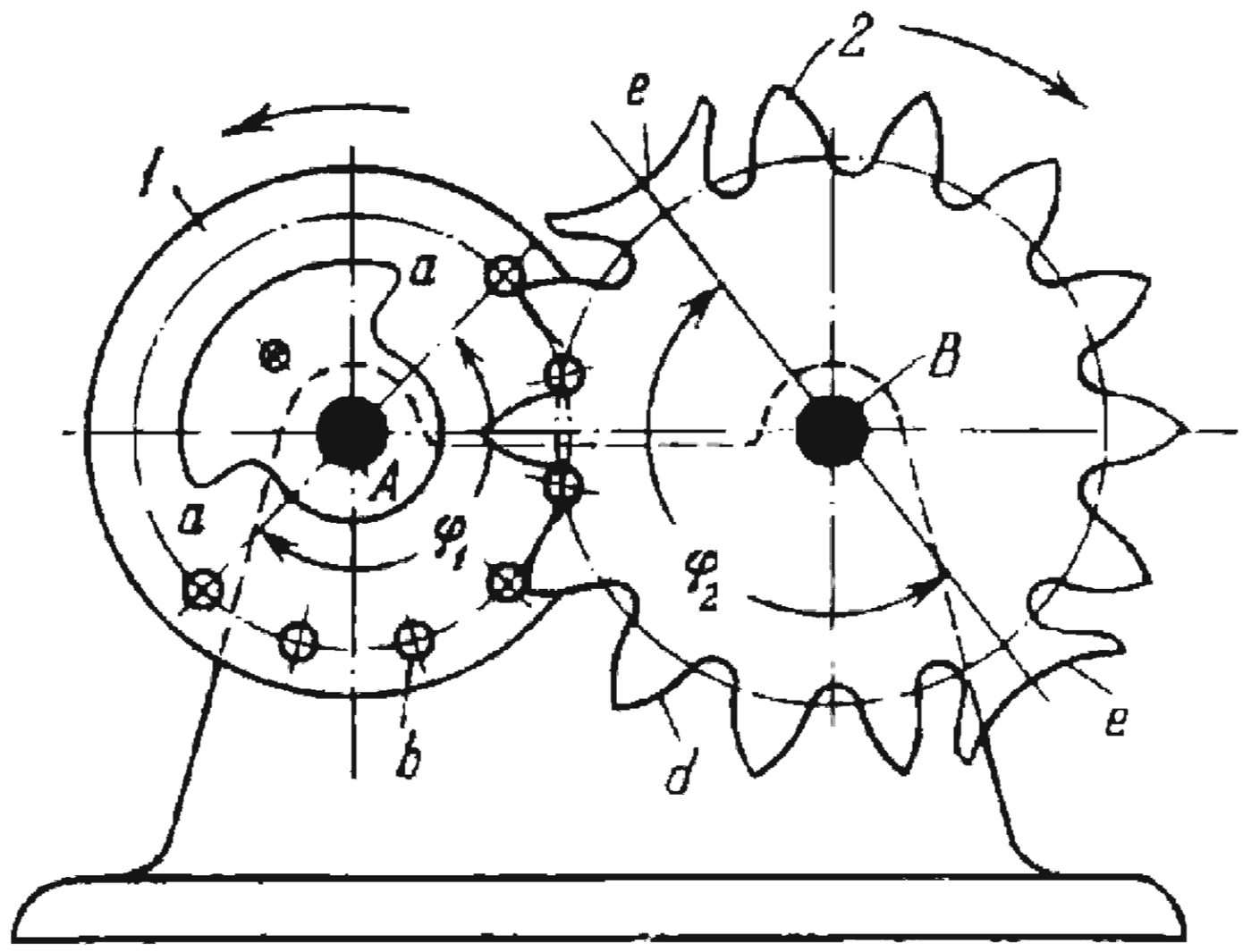

Pin wheel *1* with pins *b* rotates about fixed axis *A* and periodically meshes with teeth *d* of sprocket *2* which rotates about fixed axis *B*. Pin wheel *1* has concentric locking surface *a-a* and sprocket *2* has two symmetrically located concave surfaces *e*. When driving pin wheel *1* rotates continuously, driven sprocket *2* rotates intermittently with dwells. During the dwells, locking surface *a-a* engages one of concave surfaces *e* to prevent unintentional rotation of sprocket *2*. The period of rotation T_r of sprocket *2* is equal to the dwell period T_d. The working time factor of the mechanism equals

$$k = \frac{T_r}{T_d} = 1.$$

To each revolution of wheel *1*, sprocket *2* turns through the angle $\varphi_2 = \pi$. The profiles of teeth *d* of sprocket *2* are along curves which are equidistant to an epicycloid of a circle. The transmission ratio from wheel *1* to sprocket *2* during the rotation period T_r is

$$i_{12} = \frac{r_2}{r_1}$$

where r_1 and r_2 are the pitch radii of wheel *1* and sprocket *2*.

2597	PIN-WHEEL-SPROCKET NONSYMMETRIC DWELL MECHANISM WITH EXTERNAL ENGAGEMENT	PG D

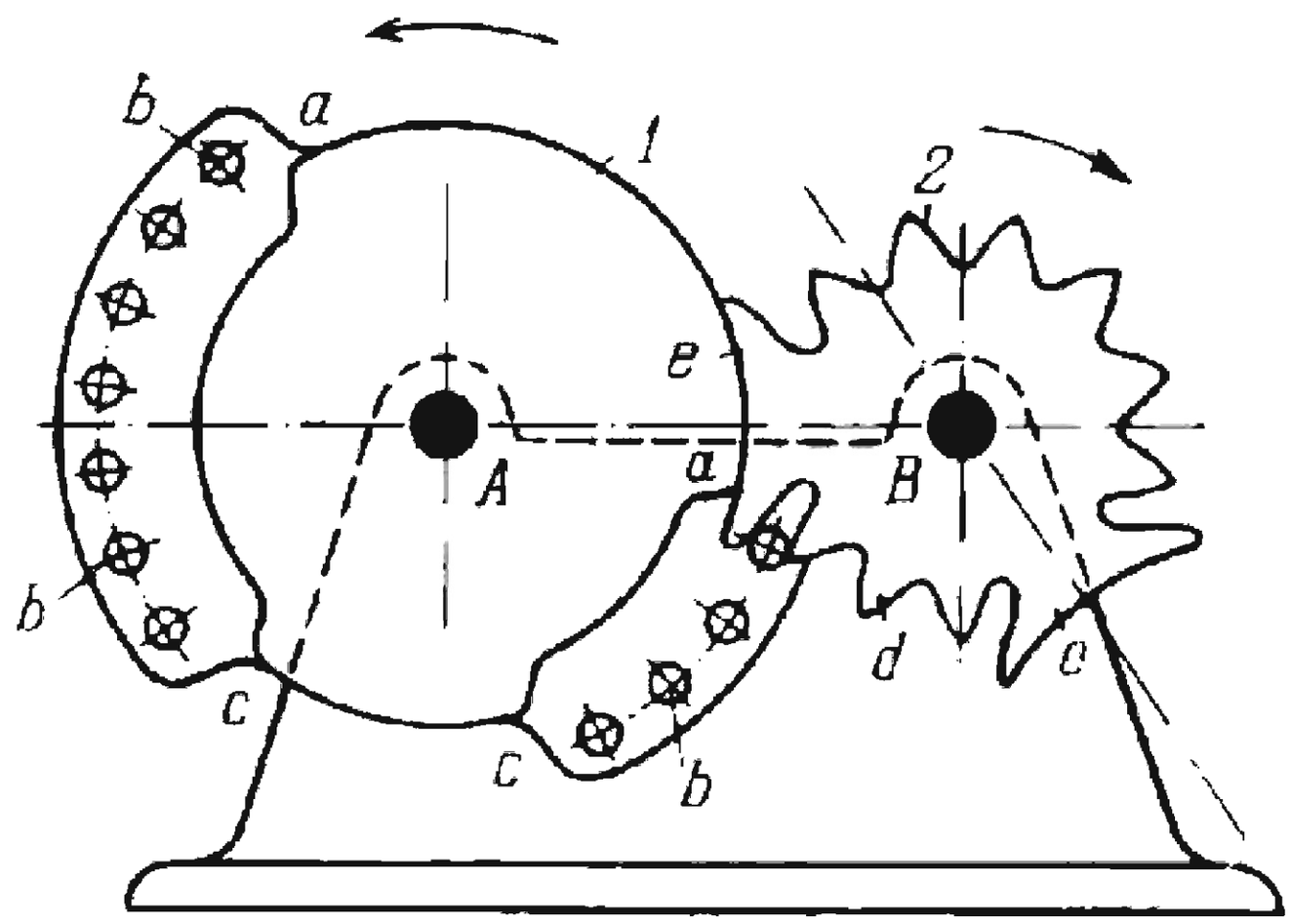

Pin wheel *1* with nonsymmetrically located pins *b* and concentric locking surfaces *a-a* and *c-c* rotates about fixed axis *A* and periodically meshes with teeth *d* of sprocket *2* which rotates about fixed axis *B*. Sprocket *2* has nonsymmetrically located teeth *d* and identical concave surfaces *e*. When driving pin wheel *1* rotates continuously, driven sprocket *2* rotates intermittently with dwells. During the dwells, locking surface *a-a* or *c-c* engages the corresponding concave surface *e* to prevent unintentional rotation of sprocket *2*. The two periods T_r of rotation of sprocket *2* are not equal, nor are the two dwell periods T_d. When the part of pin wheel *1* with four pins is in engagement, sprocket *2* turns through the angle $\frac{2}{3}\pi$; when the part with seven pins is in engagement, sprocket *2* turns through the angle $\frac{7}{6}\pi$. The profiles of teeth *d* of sprocket *2* are along curves which are equidistant to an epicycloid of a circle. The transmission ratio from wheel *1* to sprocket *2* during the rotation periods T_r is

$$i_{12}=\frac{r_2}{r_1}$$

where r_1 and r_2 are the pitch radii of wheel *1* and sprocket *2*. Wheel *1* and sprocket *2* rotate in opposite directions.

2598	PIN-WHEEL-SPROCKET DWELL MECHANISM WITH EXTERNAL ENGAGEMENT	PG D

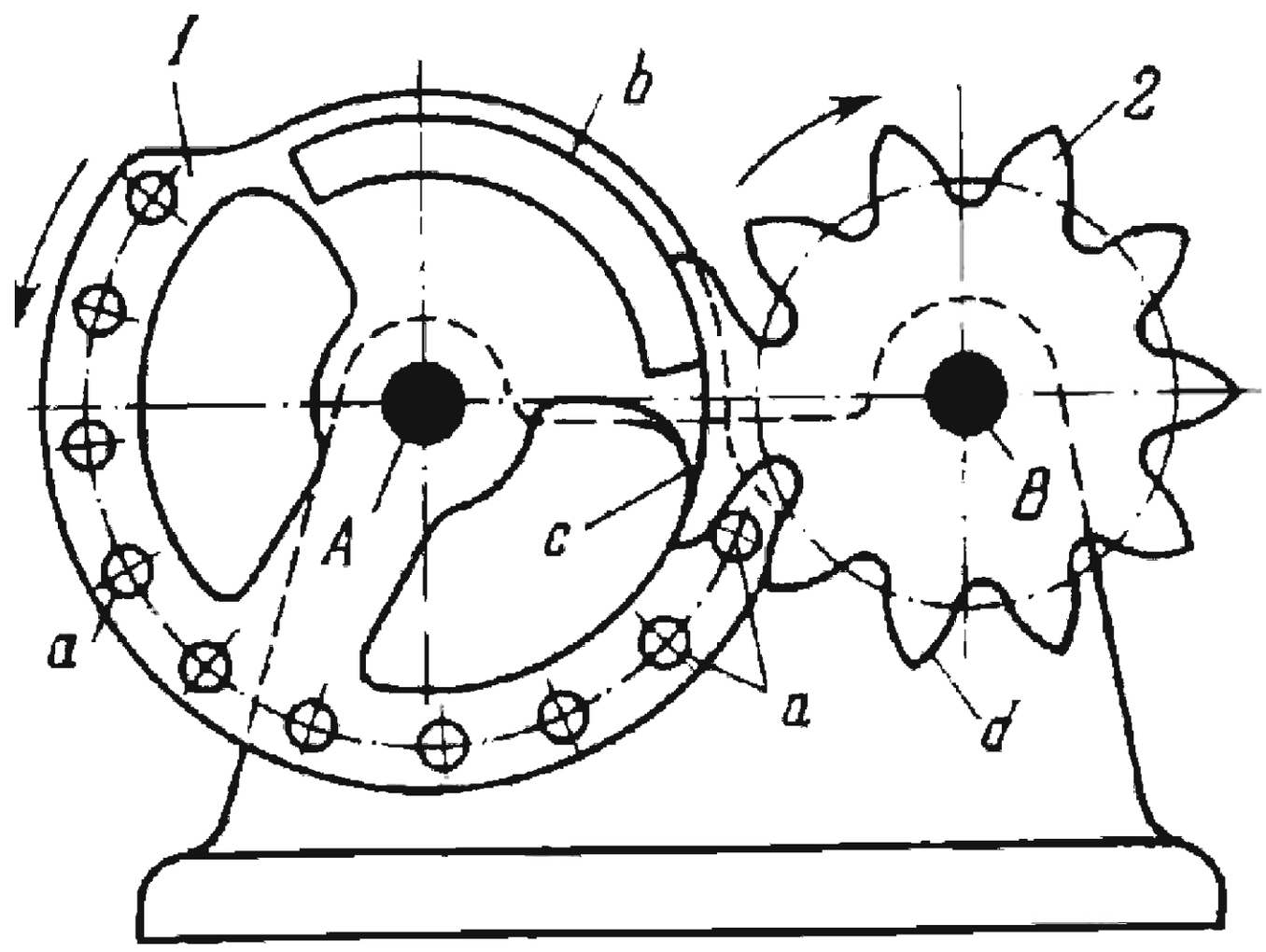

Pin wheel *1* with pins *a* rotates about fixed axis *A* and periodically meshes with teeth *d* of sprocket *2* which rotates about fixed axis *B*. Wheel *1* has concentric locking surface *b* and sprocket *2* has concave locking surface *c*. When driving pin wheel *1* rotates continuously, driven sprocket *2* rotates intermittently with dwells. During the dwells, locking surface *b* engages concave surface *c* to prevent unintentional rotation of sprocket *2*. Sprocket *2* makes one revolution to each revolution of wheel *1*. The profiles of teeth *d* of sprocket *2* are along curves which are equidistant to an epicycloid of a circle. The transmission ratio from wheel *1* to sprocket *2* during the rotation period of the latter is

$$i_{12}=\frac{r_2}{r_1}$$

where r_1 and r_2 are the pitch radii of wheel *1* and sprocket *2*. Wheel *1* and sprocket *2* rotate in opposite directions.

2599	PIN-WHEEL-SPROCKET DWELL MECHANISM WITH INTERNAL ENGAGEMENT	PG D

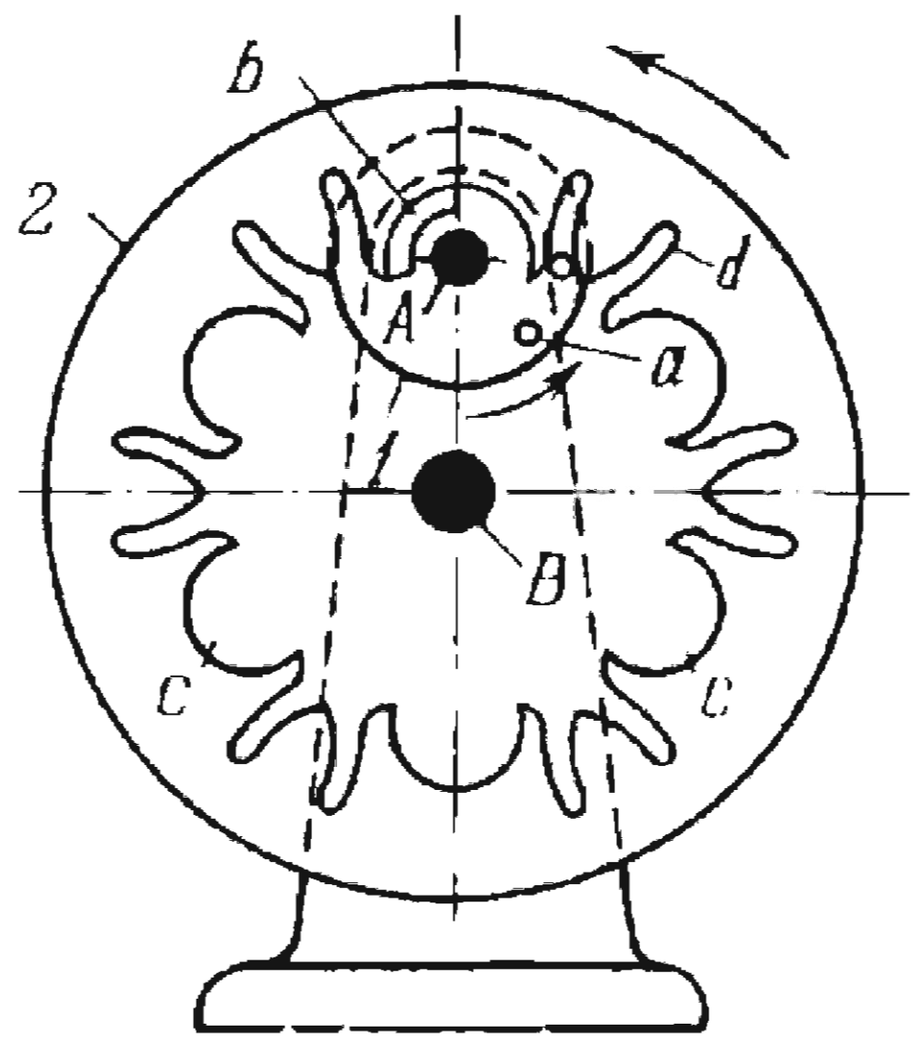

Pin wheel *1* with pins *a* rotates about fixed axis *A* and periodically meshes with teeth *d* of sprocket *2* which rotates about fixed axis *B*. Wheel *1* has concentric locking lug *b* and sprocket *2* has six symmetrically located concave locking surfaces *c*. When driving pin wheel *1* rotates continuously, driven sprocket *2* rotates intermittently with dwells. During the dwells, locking lug *b* engages the corresponding concave surface *c* to prevent unintentional rotation of sprocket *2*. To each revolution of wheel *1*, sprocket *2* turns through the angle

$$\varphi_2 = \frac{\pi}{3}.$$

The profiles of teeth *d* of sprocket *2* are along curves which are equidistant to a hypocycloid of a circle. The transmission ratio from wheel *1* to sprocket *2* during the rotation periods of the latter is

$$i_{12} = \frac{r_2}{r_1}$$

where r_1 and r_2 are the pitch radii of wheel *1* and sprocket *2*.

Wheel *1* and sprocket *2* rotate in the same direction.

2600	PIN-WHEEL-SPROCKET DWELL MECHANISM WITH INTERNAL ENGAGEMENT	PG D

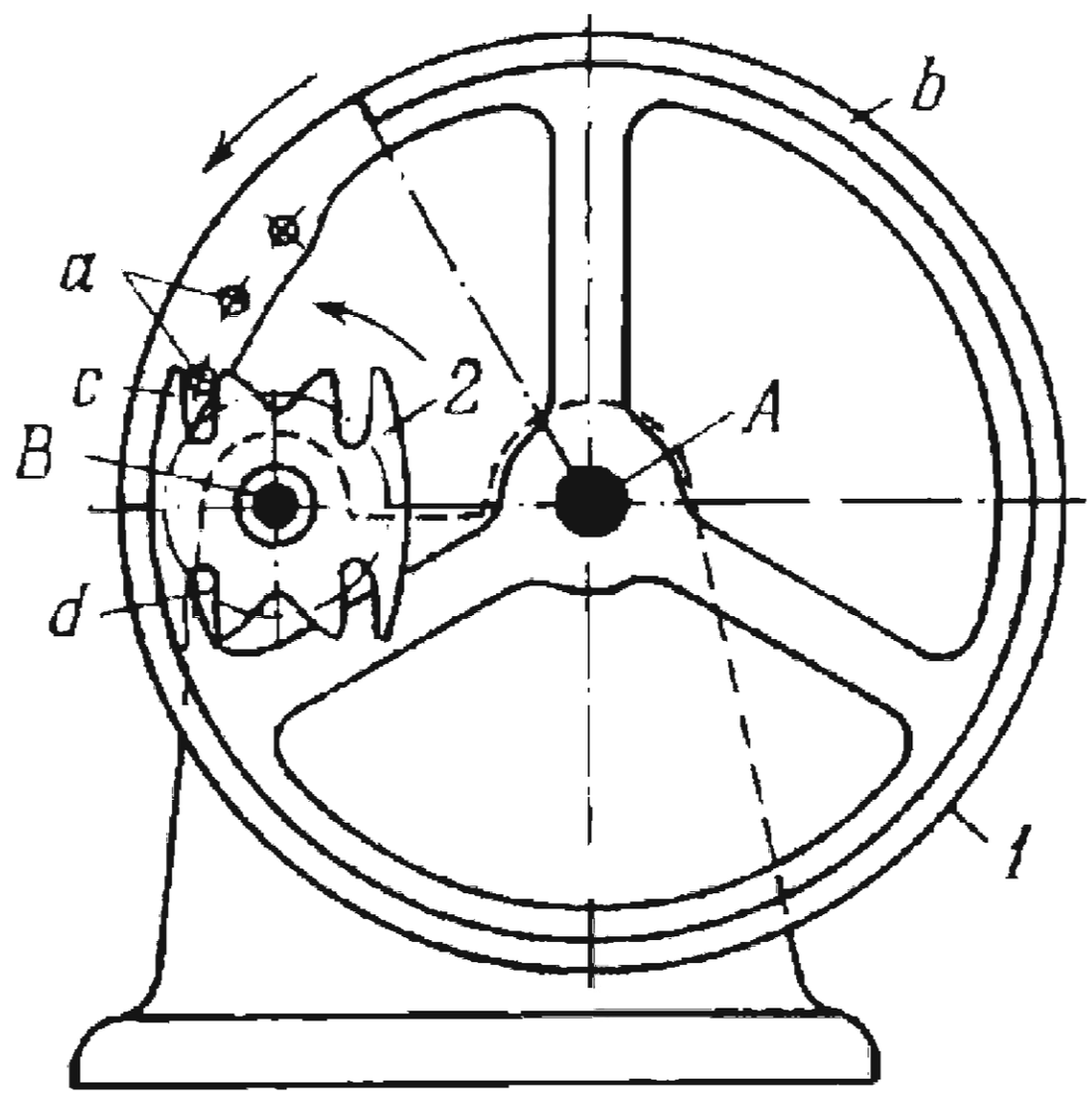

Pin wheel *1* with pins *a* rotates about fixed axis *A* and periodically meshes with teeth *d* of sprocket *2* which rotates about fixed axis *B*. Wheel *1* has concentric concave locking surface *b* and sprocket *2* has symmetrically located concentric convex locking surfaces *c*. When driving pin wheel *1* rotates continuously, driven sprocket *2* rotates intermittently with dwells. During the dwells, locking surface *b* engages the corresponding convex surface *c* to prevent unintentional rotation of sprocket *2*. To each revolution of wheel *1*, sprocket *2* turns through the angle

$$\varphi_2 = \frac{\pi}{2} .$$

The profiles of teeth *d* of sprocket *2* are along curves which are equidistant to a hypocycloid of a circle. The transmission ratio from wheel *1* to sprocket *2* during the rotation periods of the latter is

$$i_{12} = \frac{r_2}{r_1}$$

where r_1 and r_2 are the pitch radii of wheel *1* and sprocket *2*. Wheel *1* and sprocket *2* rotate in the same direction.

2601	PIN-WHEEL-SPROCKET DWELL MECHANISM WITH A LOCKING PAWL	PG D

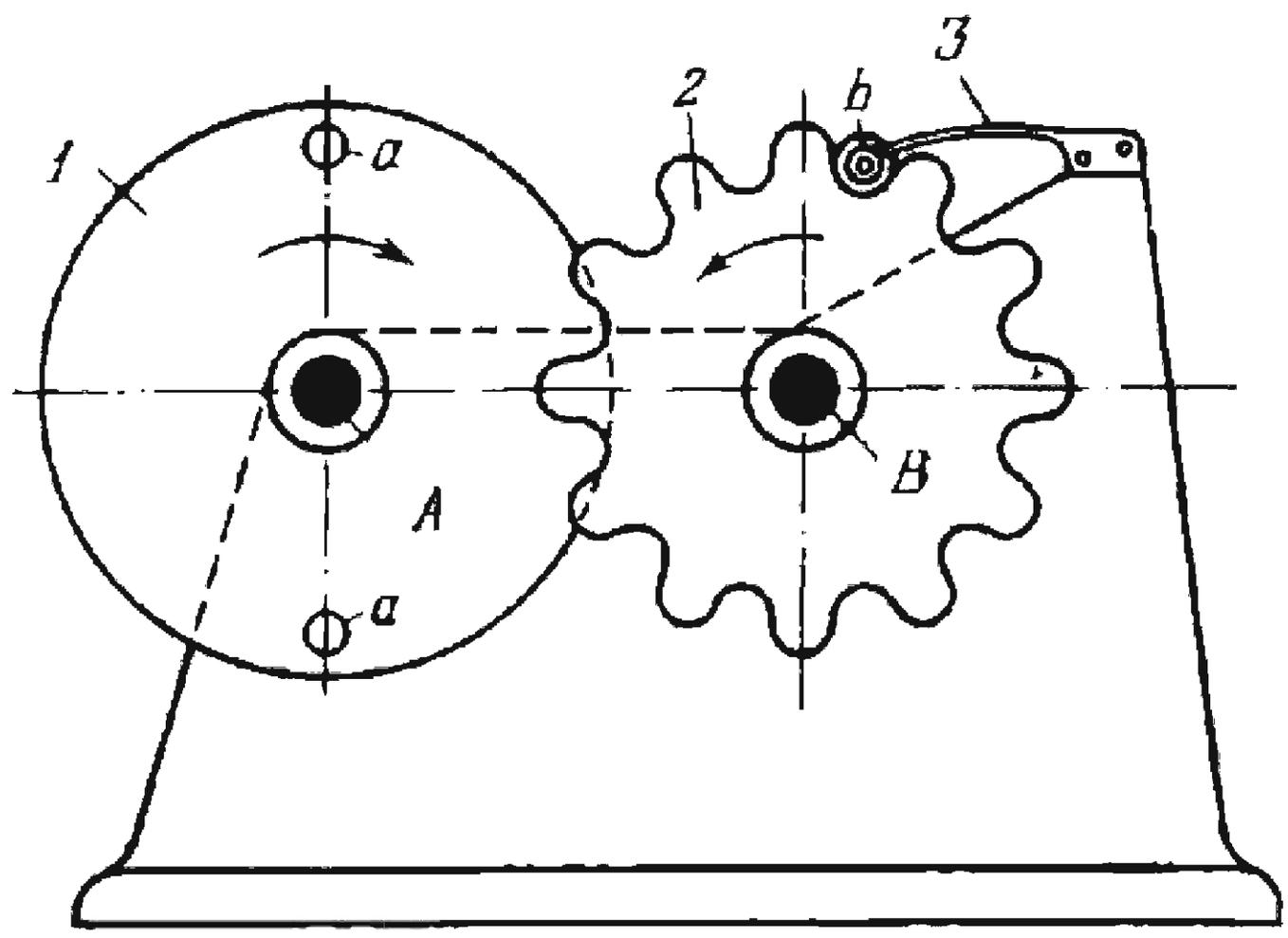

Driving pin wheel *1* carries pins *a* and rotates about fixed axis *A*. When wheel *1* rotates continuously, driven sprocket *2* rotates intermittently with dwells about fixed axis *B*. The average transmission ratio from wheel *1* to sprocket *2* is

$$i_{12}=\frac{z_2}{z_1}$$

where z_1 is the number of pins on wheel *1* and z_2 is the number of teeth of sprocket *2*. Spring-loaded pawl *3* with roller *b* prevents unintentional rotation of sprocket *2* during the dwells.

2602	PIN-WHEEL-SPROCKET DWELL MECHANISM WITH A LOCKING PAWL	PG D

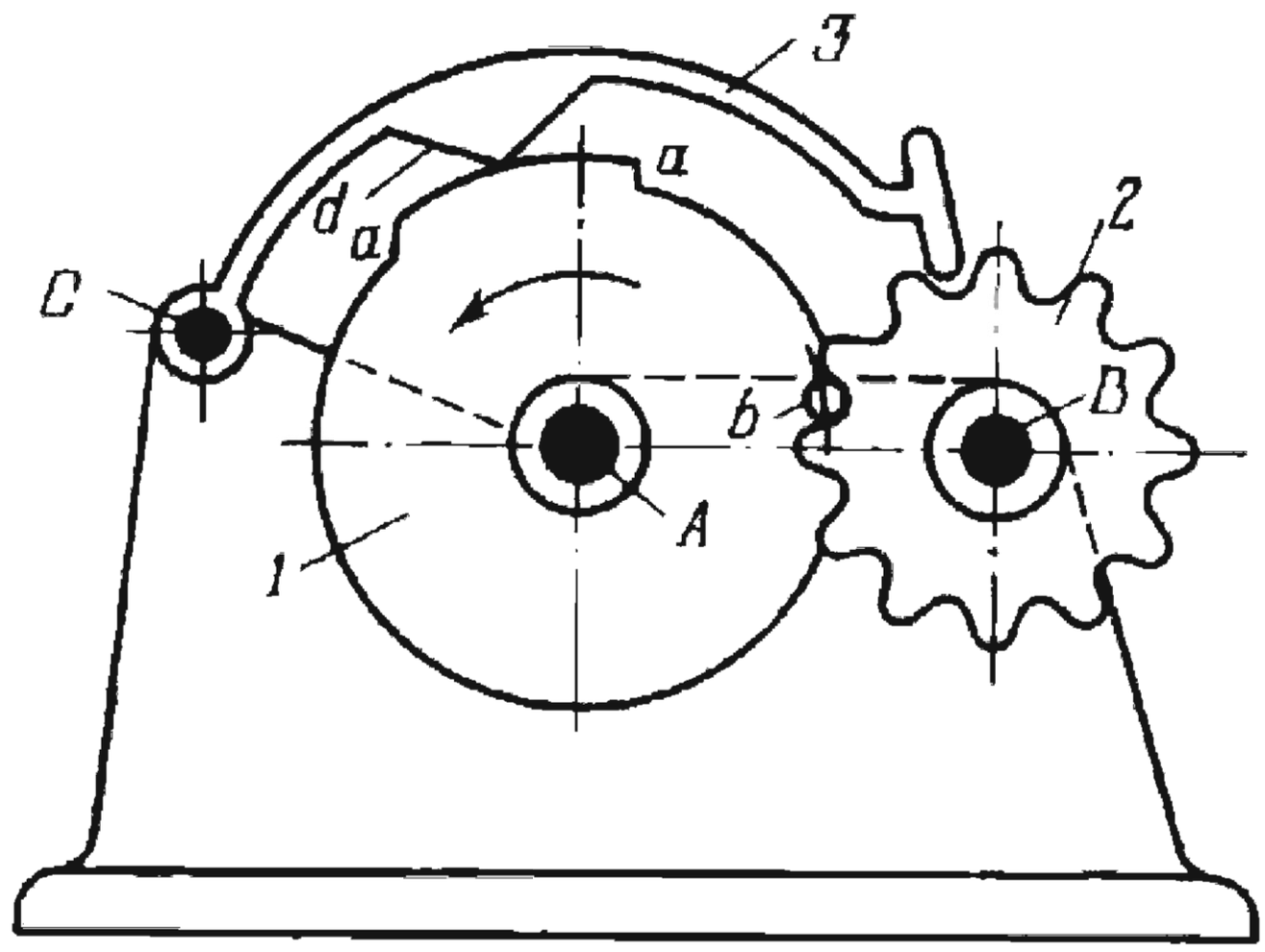

Driving pin wheel *1* has pin *b* and rotates about fixed axis *A*. When driving pin wheel *1* rotates continuously, driven sprocket *2* rotates intermittently with dwells about fixed axis *B*. The average transmission ratio from wheel *1* to sprocket *2* is

$$i_{12}=\frac{z_2}{z_1}$$

where z_1 is the number of pins on wheel *1* and z_2 is the number of teeth of sprocket *2*. Pawl *3* turns about fixed axis *C* and prevents unintentional rotation of sprocket *2* during the dwells. Pawl *3* is raised to release sprocket *2* during its rotation periods by cam surface *a-a* of wheel *1* which actuates lug *d* of the pawl.

2603	PIN-WHEEL DWELL MECHANISM	PG D

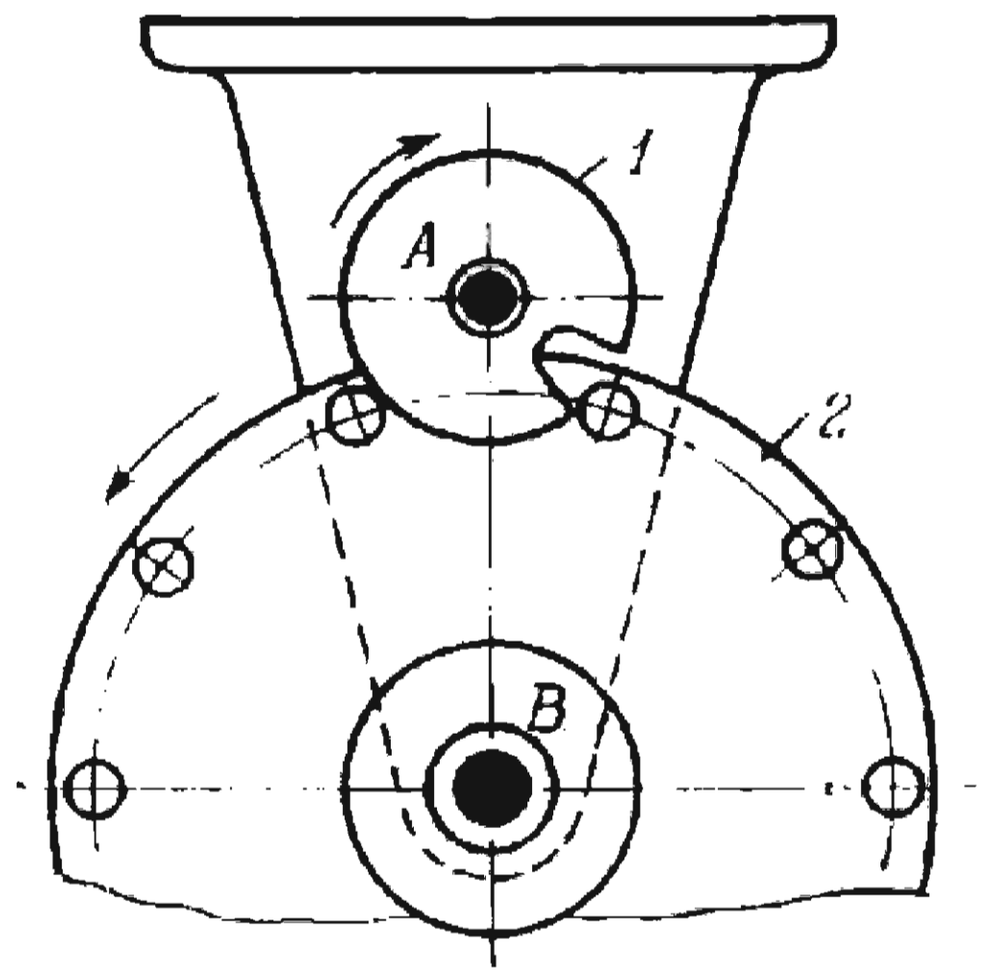

When driving link *1* rotates continuously about fixed axis *A*, driven pin wheel *2* rotates intermittently with dwells about fixed axis *B*. The concentric outer surface of link *1* engages two adjacent pins of wheel *2* and prevents unintentional rotation of the wheel during its dwells.

2604	PIN-WHEEL DWELL MECHANISM WITH A LOCKING PAWL	PG D

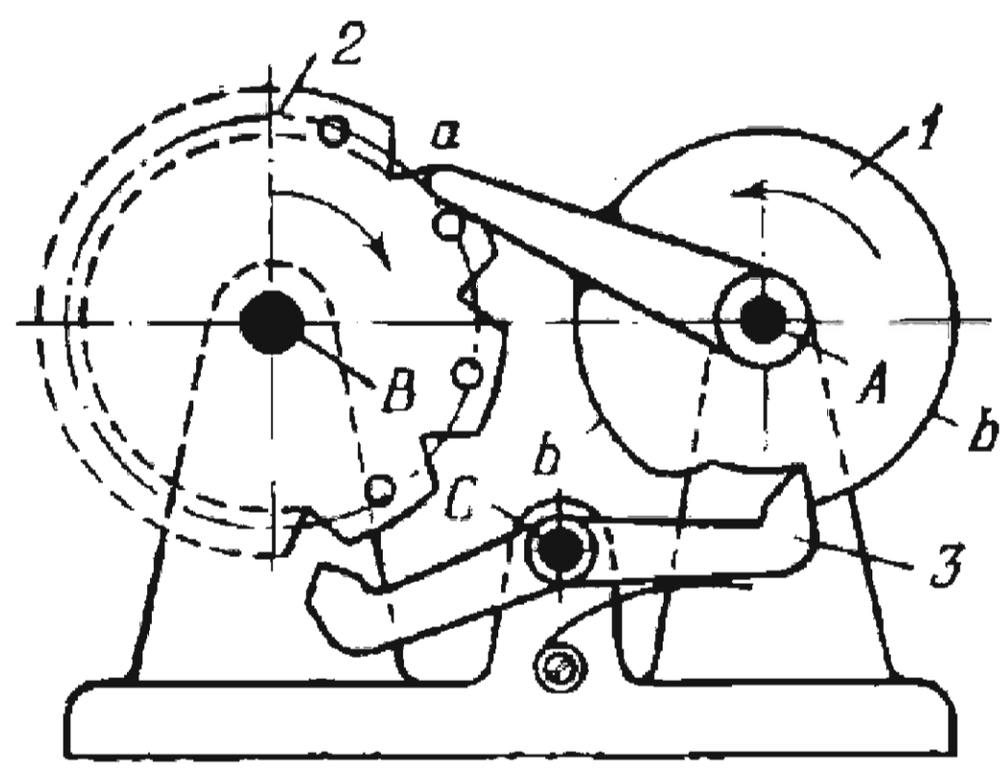

Driving wheel *1* rotates about fixed axis *A* and its tooth *a* periodically engages a pin of driven pin wheel *2*, rotating the pin wheel about fixed axis *B* through a certain angle. Thus, when wheel *1* rotates continuously, wheel *2* rotates intermittently with dwells. Wheel *2* is locked during its dwell periods by pawl *3* which turns about fixed axis *C*. Pawl *3* is brought into and held in engagement with pin wheel *2* by concentric cam surface *b-b* of wheel *1*.

2605	PIN-WHEEL-SPROCKET DWELL MECHANISM OF A COUNTER	PG D

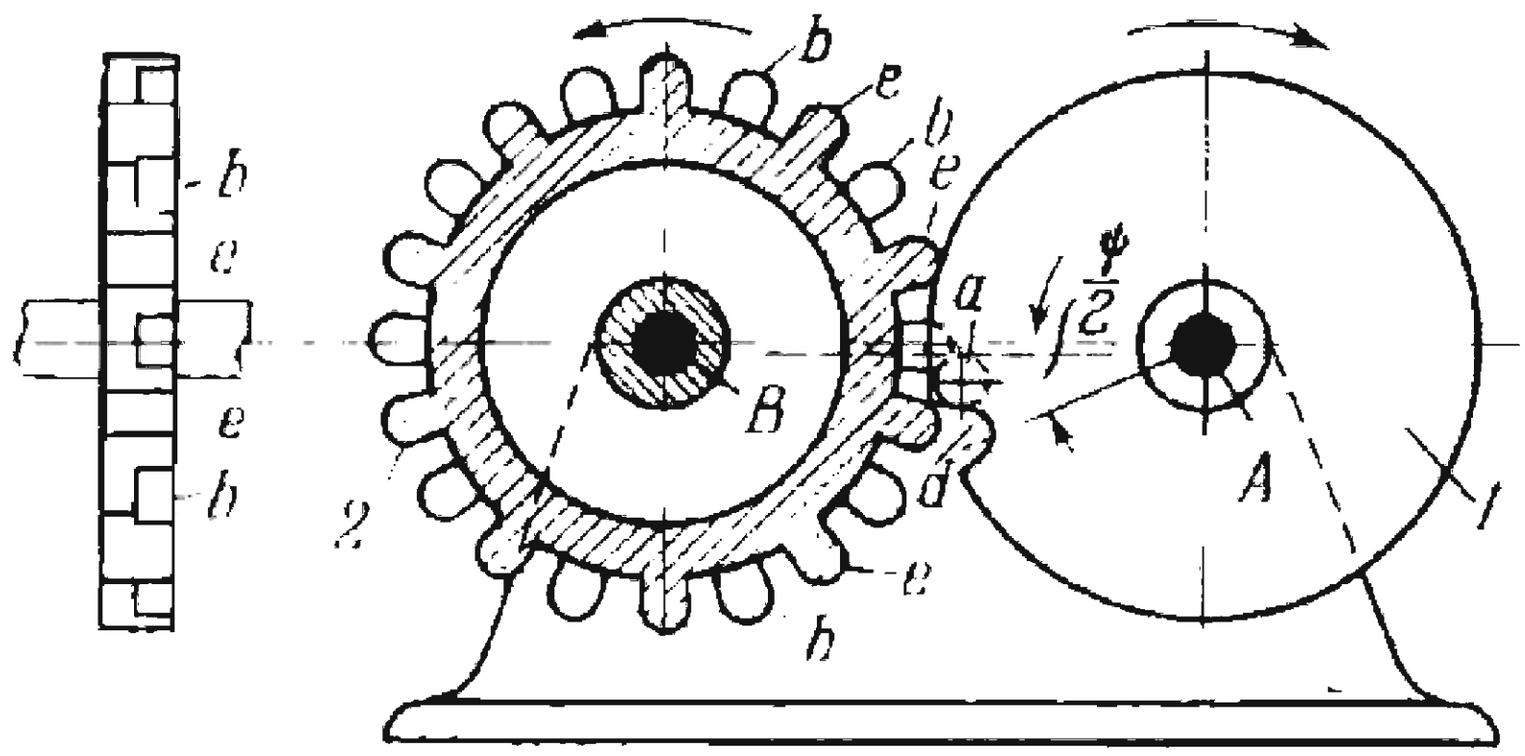

When driving pin wheel *1* turns through the angle ψ about fixed axis *A*, driven sprocket *2* with twenty teeth is turned through two divisions, i.e. through 1/10 revolution about fixed axis *B*. Every other tooth, *b*, of sprocket *2* is cut off to one half of the face width of the other teeth *e*. The first half of the rotation of wheel *2* is accomplished by the engagement of pin *a* with a short tooth *b*, and the other half of the rotation by the engagement of slot *d* in pin wheel *1* with a long tooth *e*. Unintentional rotation of sprocket *2* during its dwell periods is prevented by the engagement of the concentric outer surface of wheel *1* and two adjacent long teeth *e*.

2606	PIN-WHEEL-RACK DWELL MECHANISM	PG D

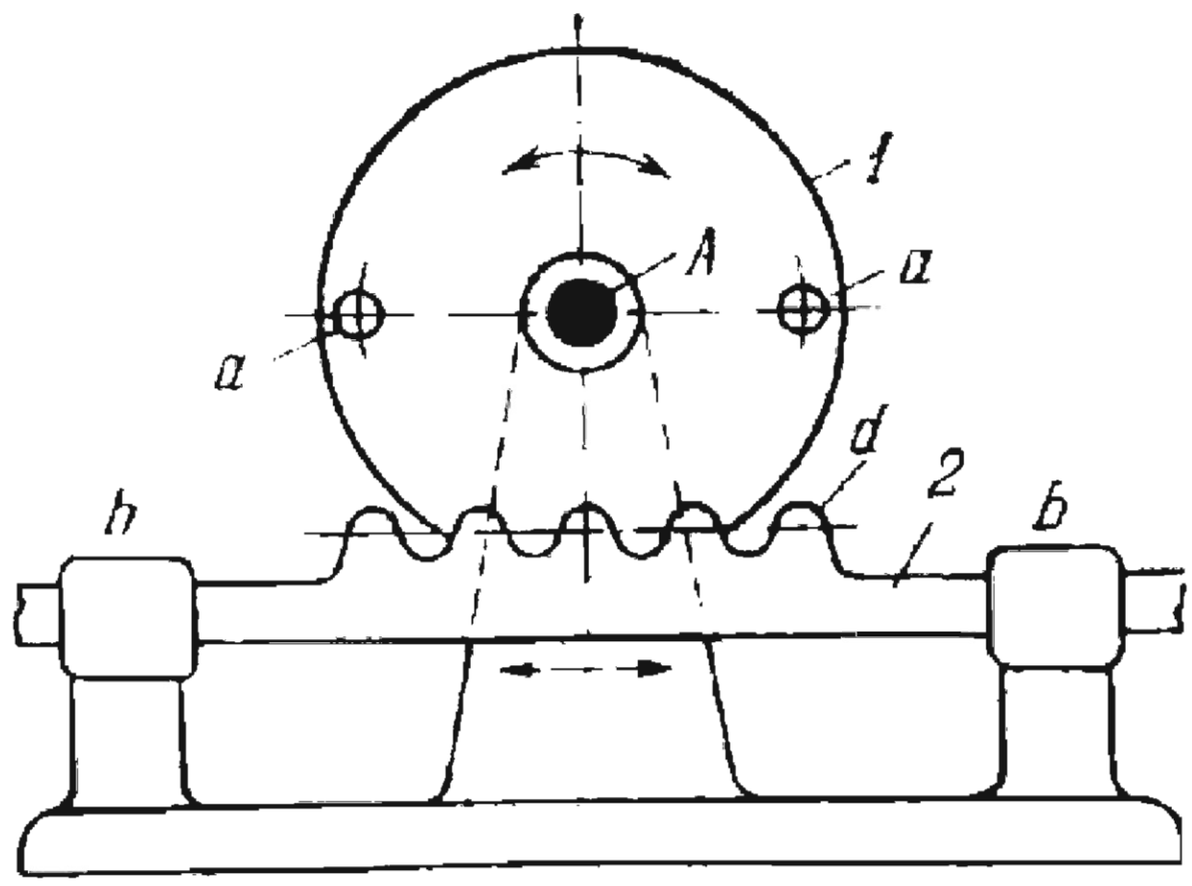

Pin wheel *1* rotates about fixed axis *A* and its pins *a* mesh with teeth *d* of rack *2* which slides along fixed guides *b-b*. The profiles of teeth *d* of rack *2* consist of two semicircles. When driving pin wheel *1* rotates continuously at uniform velocity, driven rack *2* travels intermittently with dwells at nonuniform velocity. Impacts occur when pins *a* come into engagement with teeth *d* of rack *2*.

2607	PIN-WHEEL-RACK DWELL MECHANISM	PG D

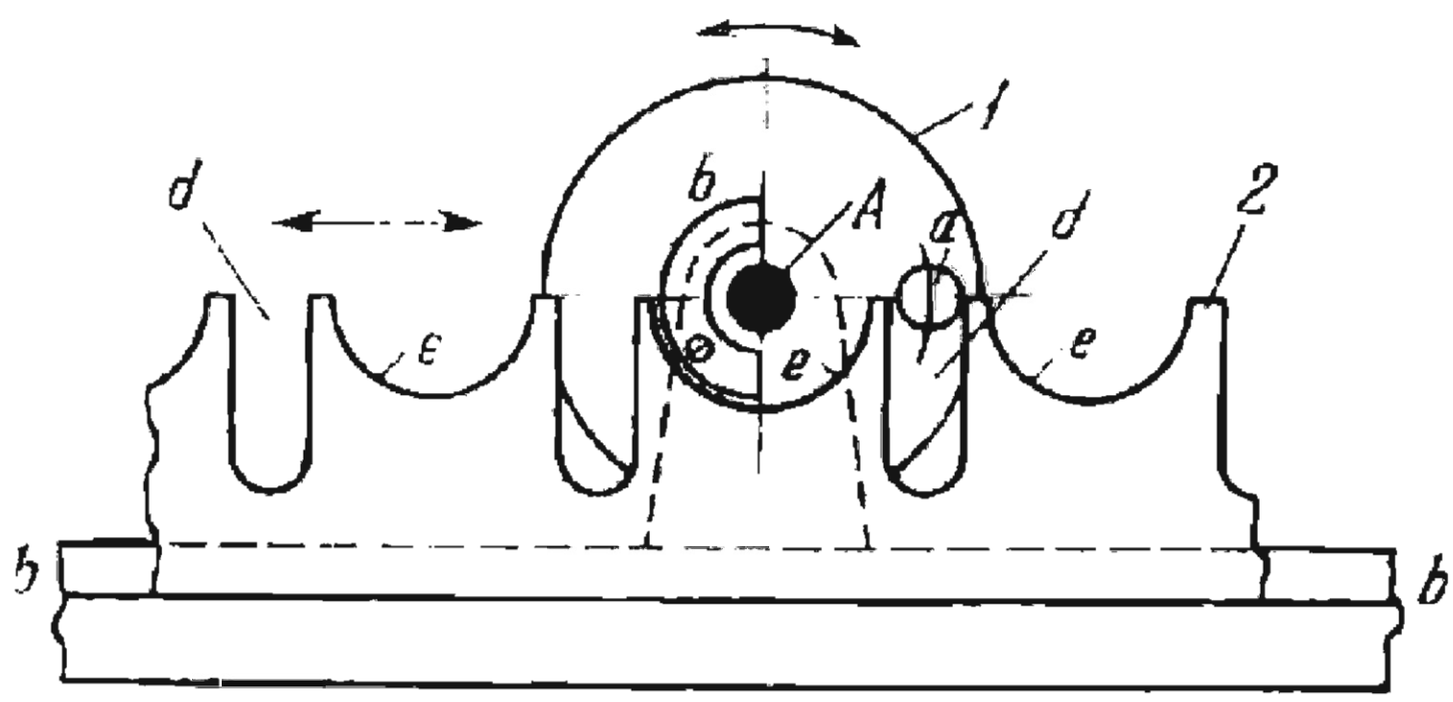

Pin wheel *1* with pin *a* rotates about fixed axis *A* and meshes with slots *d* of rack *2* which slides along fixed guides *b-b*. The working surfaces of slots *d* are straight. Wheel *1* has concentric locking lug *b* and rack *2* has concave locking surfaces *e*. When driving pin wheel *1* rotates continuously at uniform velocity, driven rack *2* travels intermittently with dwells at nonuniform velocity according to a sine-curve law. During the dwells, concentric lug *b* engages the corresponding concave surface *e*, preventing unintentional motion of rack *2*.

2608	PIN-RACK-SPROCKET DWELL MECHANISM	PG D

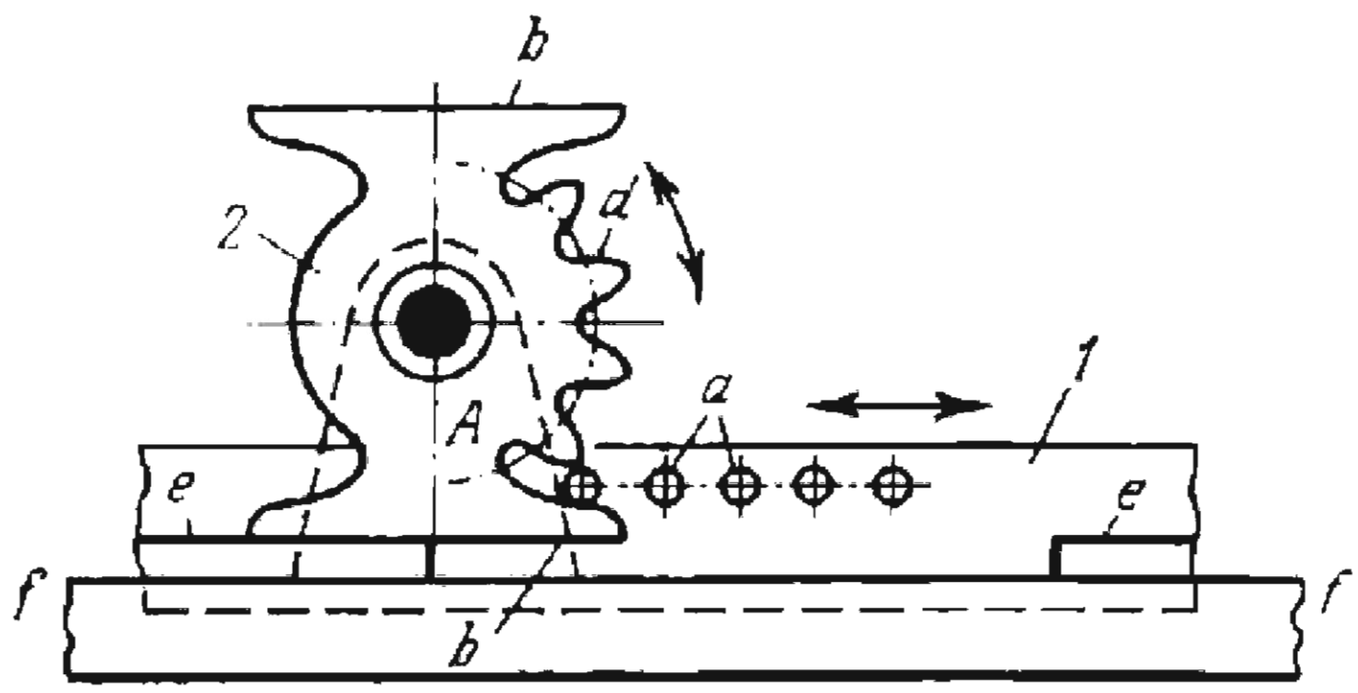

Pin rack *1* with pins *a* slides along fixed guide *f-f* and meshes with teeth *d* of sprocket *2* which rotates about fixed axis *A*. The profiles of teeth *c* of sprocket *2* are involutes of a circle. Rack *1* has flat locking surfaces *e* and sprocket *2* has flat locking surfaces *b*. When driving rack *1* travels at uniform velocity, driven sprocket *2* rotates at uniform velocity with dwells. Unintentional rotation of sprocket *2* is prevented during dwells by the engagement of a flat surface *e* and the corresponding flat surface *b* of the sprocket.

2609	PIN-WHEEL-SPROCKET DWELL MECHANISM WITH EXTERNAL ENGAGEMENT	FG D

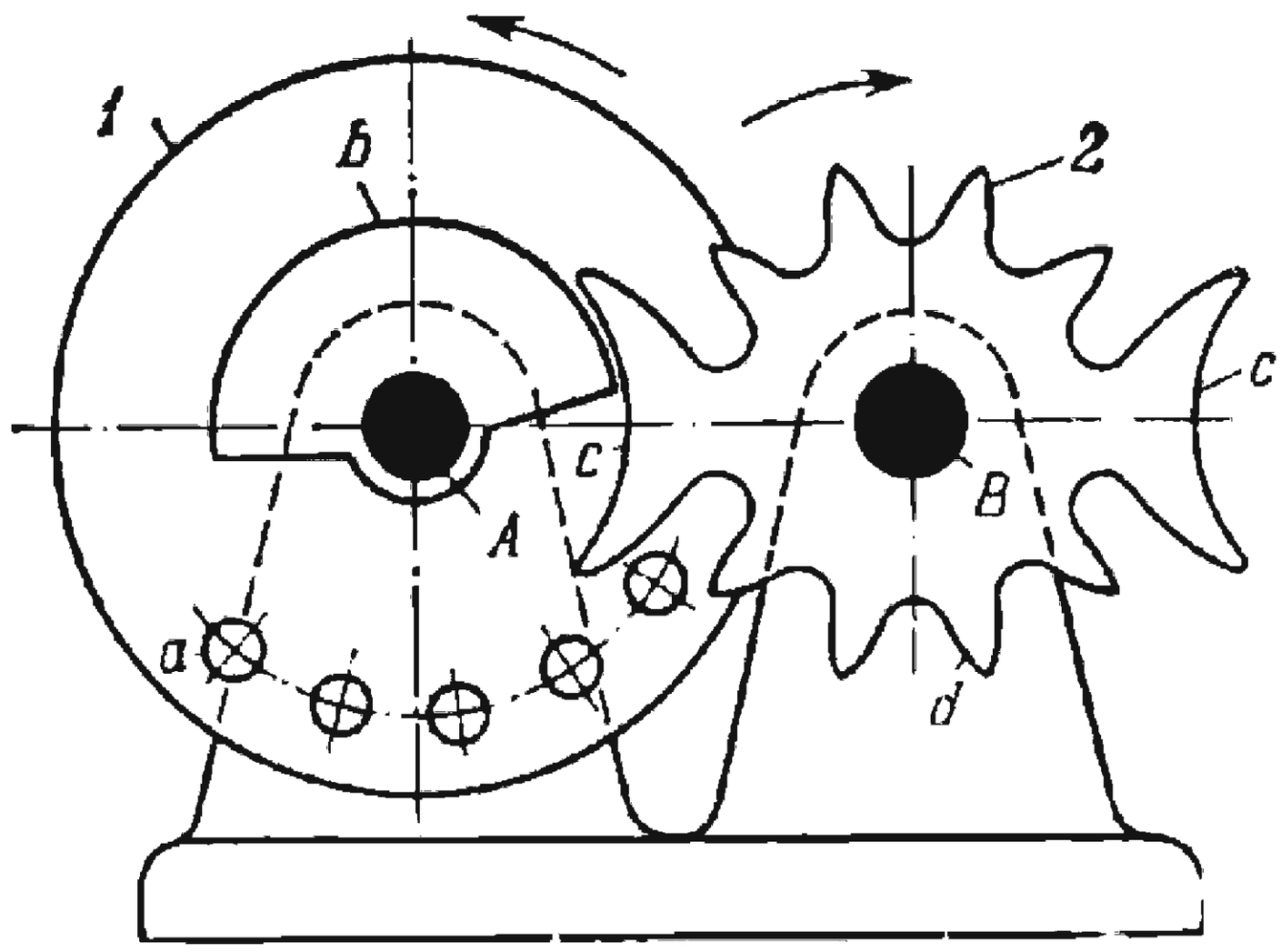

Pin wheel *1* with pins *a* rotates about fixed axis *A* and periodically meshes with teeth *d* of sprocket *2* which rotates about fixed axis *B*. Pin wheel *1* has concentric locking surface *b* and sprocket *2* has two concave locking surfaces *c*. When driving pin wheel *1* rotates continuously, driven sprocket *2* rotates intermittently with dwells. During the dwells, locking surface *b* engages one of concave surfaces *c* to prevent unintentional rotation of sprocket *2*. To each revolution of wheel *1* sprocket *2* turns through the angle $\varphi_2 = \pi$. The profiles of teeth *d* of sprocket *2* are along curves which are equidistant to an epicycloid of a circle. The transmission ratio from wheel *1* to sprocket *2* during the rotation of sprocket *2* is

$$i_{12} = \frac{r_2}{r_1} < 1$$

where r_1 and r_2 are the pitch radii of wheel *1* and sprocket *2*. Wheel *1* and sprocket *2* rotate in opposite directions.

2610	PIN-WHEEL-SPROCKET DWELL MECHANISM WITH EXTERNAL ENGAGEMENT	PG D

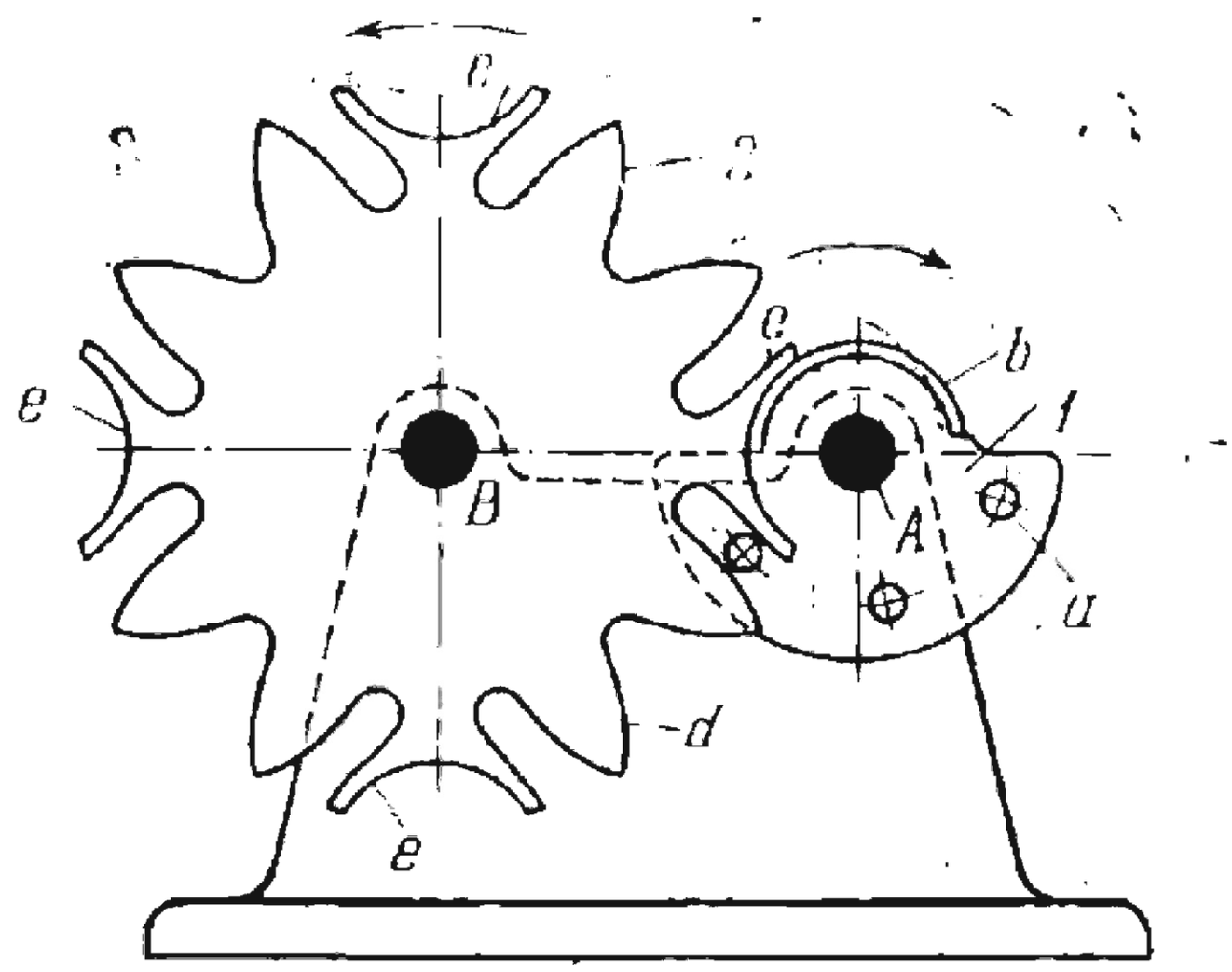

Pin wheel *1* with pins *a* rotates about fixed axis *A* and periodically meshes with teeth *d* of sprocket *2* which rotates about fixed axis *B*. Pin wheel *1* has concentric locking surface *b* and sprocket *2* has four symmetrically located concave locking surfaces *e*. When driving pin wheel *1* rotates continuously, driven sprocket *2* rotates intermittently with dwells. During the dwells, locking surface *b* engages one of concave surfaces *e* to prevent unintentional rotation of sprocket *2*. To each revolution of wheel *1*, sprocket *2* turns through the angle $\varphi_2 = \frac{\pi}{2}$. The profiles of teeth *d* of sprocket *2* are along curves which are equidistant to an epicycloid of a circle. The transmission ratio from wheel 1 to sprocket *2* during the rotation periods of the latter is

$$i_{12} = \frac{r_2}{r_1}$$

where r_1 and r_2 are the pitch radii of wheel *1* and sprocket *2*. Wheel *1* and sprocket *2* rotate in opposite directions.

2611	PIN-WHEEL-SPROCKET DWELL MECHANISM WITH LOCKING ROLLERS	PG D

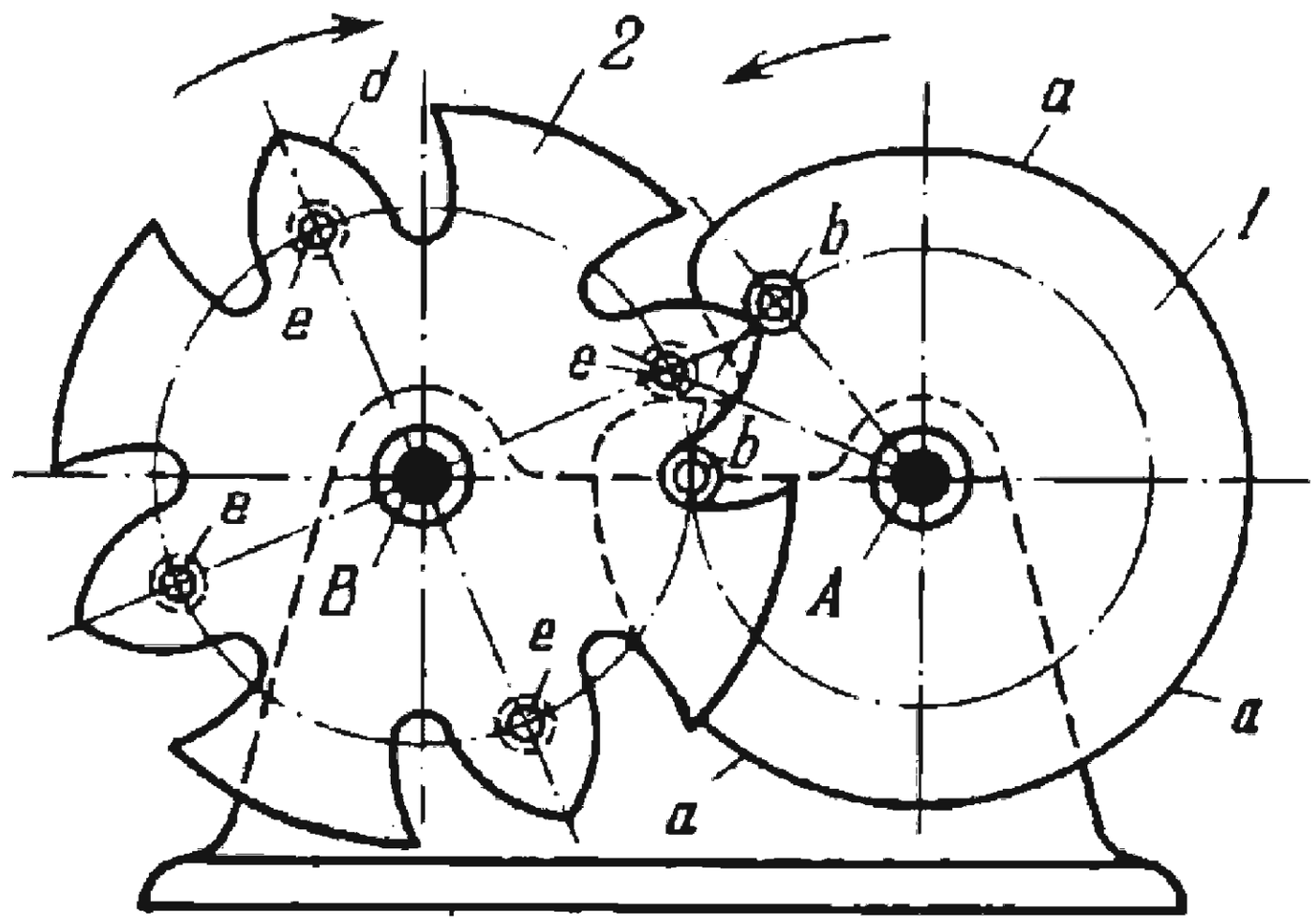

Pin wheel *1* with pins *b* rotates about fixed axis *A* and periodically meshes with teeth *d* of sprocket *2* which rotates about fixed axis *B*. Pin wheel *1* has concentric locking surface *a-a* and sprocket *2* has four locking rollers *e*. When driving pin wheel *1* rotates continuously, driven sprocket *2* rotates intermittently with dwells. During the dwells, locking surface *a-a* engages two adjacent rollers *e* to prevent unintentional rotation of sprocket *2*. To each revolution of wheel *1*, sprocket *2* turns through the angle $\varphi_2 = \frac{\pi}{2}$. The profiles of teeth *d* of sprocket *2* are along curves which are equidistant to an epicycloid of a circle. The transmission ratio from wheel *1* to sprocket *2* during the rotation of the latter is

$$i_{12} = \frac{r_2}{r_1}$$

where r_1 and r_2 are the pitch radii of wheel *1* and sprocket *2*. Wheel *1* and sprocket *2* rotate in opposite directions.

2612	PIN-WHEEL-SPROCKET DWELL MECHANISM WITH EXTERNAL ENGAGEMENT	PG D

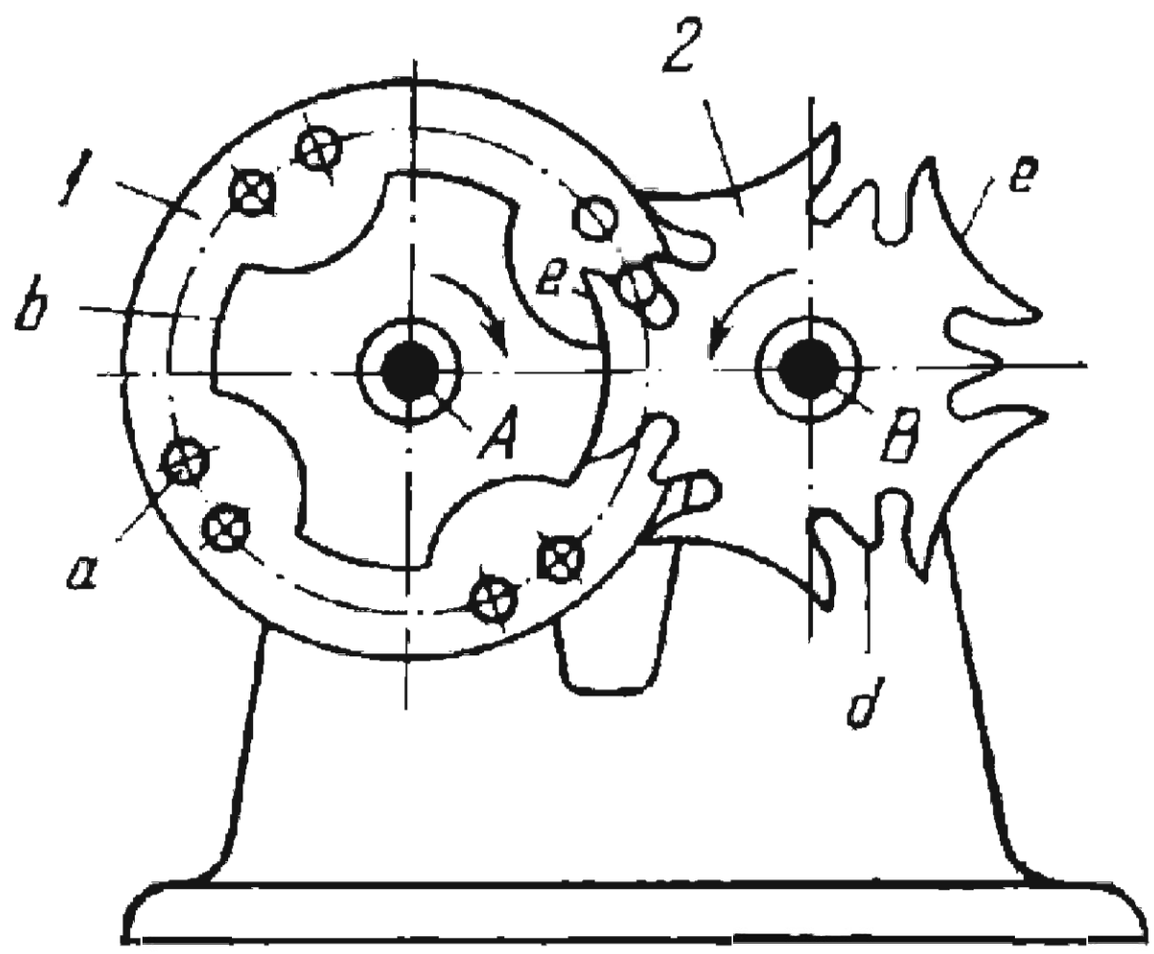

Pin wheel *1* with pins *a* rotates about fixed axis *A* and periodically meshes with teeth *d* of sprocket *2* which rotates about fixed axis *B*. Pin wheel *1* has four symmetrically located concentric locking surfaces *b* and sprocket *2* has five symmetrically located concave locking surfaces *e*. When driving pin wheel *1* rotates continuously, driven sprocket *2* rotates intermittently with dwells. During the dwells, a locking surface *b* engages one of concave surfaces *e* to prevent unintentional rotation of sprocket *2*. To each revolution of wheel *1*, sprocket *2* turns through the angle $\varphi_2 = 288°$. A full cycle of operation of the mechanism corresponds to five revolutions of wheel *1*. The profiles of teeth *d* of sprocket *2* are along curves which are equidistant to an epicycloid of a circle. The transmission ratio from wheel *1* to sprocket *2* during the rotation of the latter is

$$i_{12} = \frac{r_2}{r_1}$$

where r_1 and r_2 are the pitch radii of wheel *1* and sprocket *2*. Wheel *1* and sprocket *2* rotate in opposite directions.

2613	PIN-WHEEL-SPROCKET DWELL MECHANISM WITH THREE DRIVEN LINKS	PG D

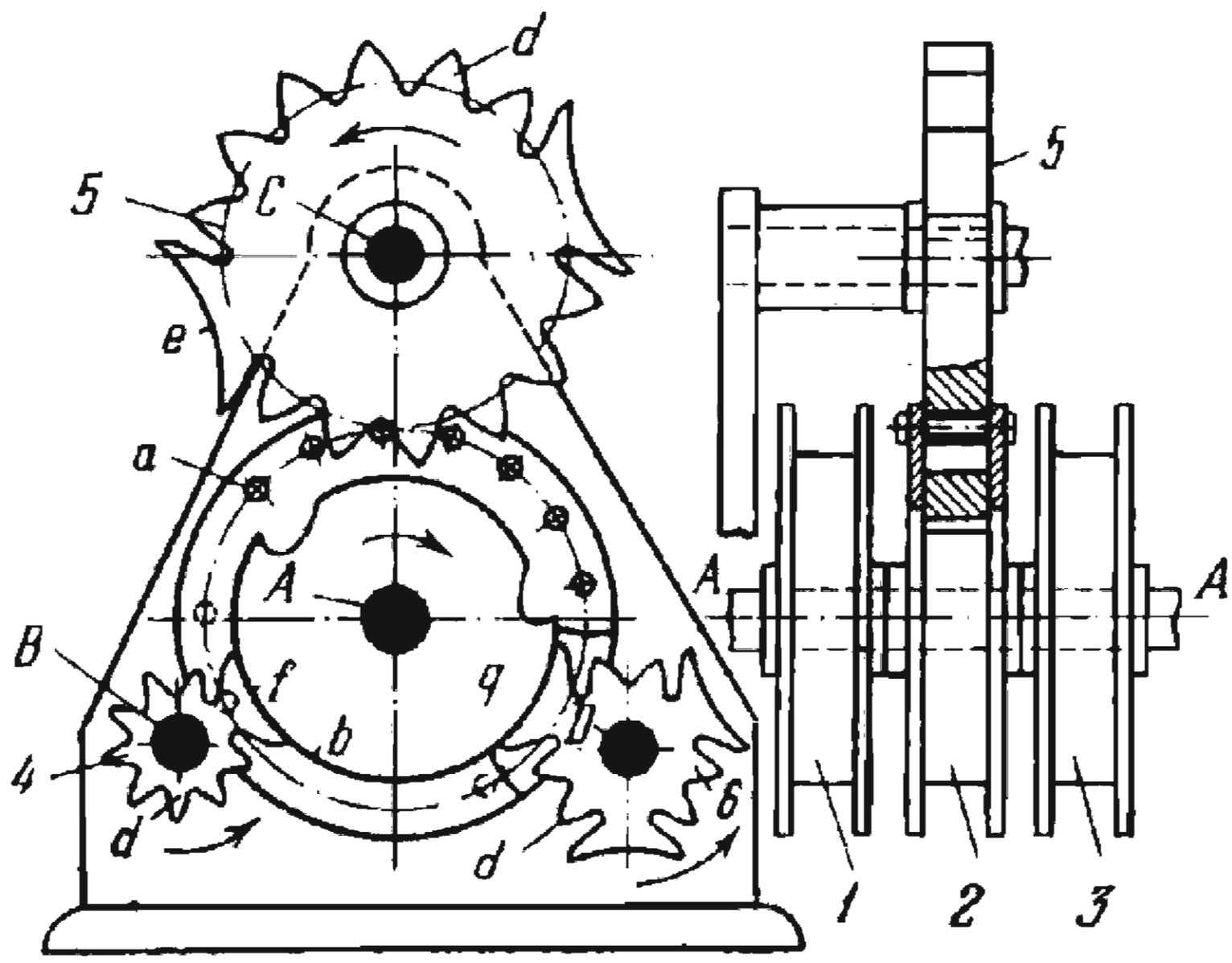

Three pin wheels, *1*, *2* and *3*, of equal pitch diameter and rigidly attached together, with pins *a*, rotate about fixed axis *A* and mesh with teeth *d* of sprockets *4*, *5* and *6* which rotate about fixed axes *B*, *C* and *D*. Pin wheels *1*, *2* and *3* have three, seven and nine pins, respectively. Each pin wheel has a concentric locking surface *b*, and sprockets *4*, *5* and *6* have concave locking surfaces *f*, *e* and *q*. When driving pin wheels *1*, *2* and *3* rotate continuously, driven sprockets *4*, *5* and *6* rotate intermittently with dwells. During the dwells, locking surfaces *b* engage concave surfaces *f*, *e* and *q* to prevent unintentional rotation of the corresponding sprockets *4*, *5* and *6*. To each revolution of wheels *1*, *2* and *3*, sprockets *4*, *5* and *6* turn through the angles $\varphi_4 = 2\pi$, $\varphi_5 = \pi$ and $\varphi_6 = \frac{2}{3}\pi$. Sprockets *4*, *5* and *6* rotate consecutively, not simultaneously. The profiles of teeth *d* of sprockets *4*, *5* and *6* are along curves which are equidistant to an epicycloid of a circle. The direction of rotation of sprockets *4*, *5* and *6* is opposite to that of wheels *1*, *2* and *3*.

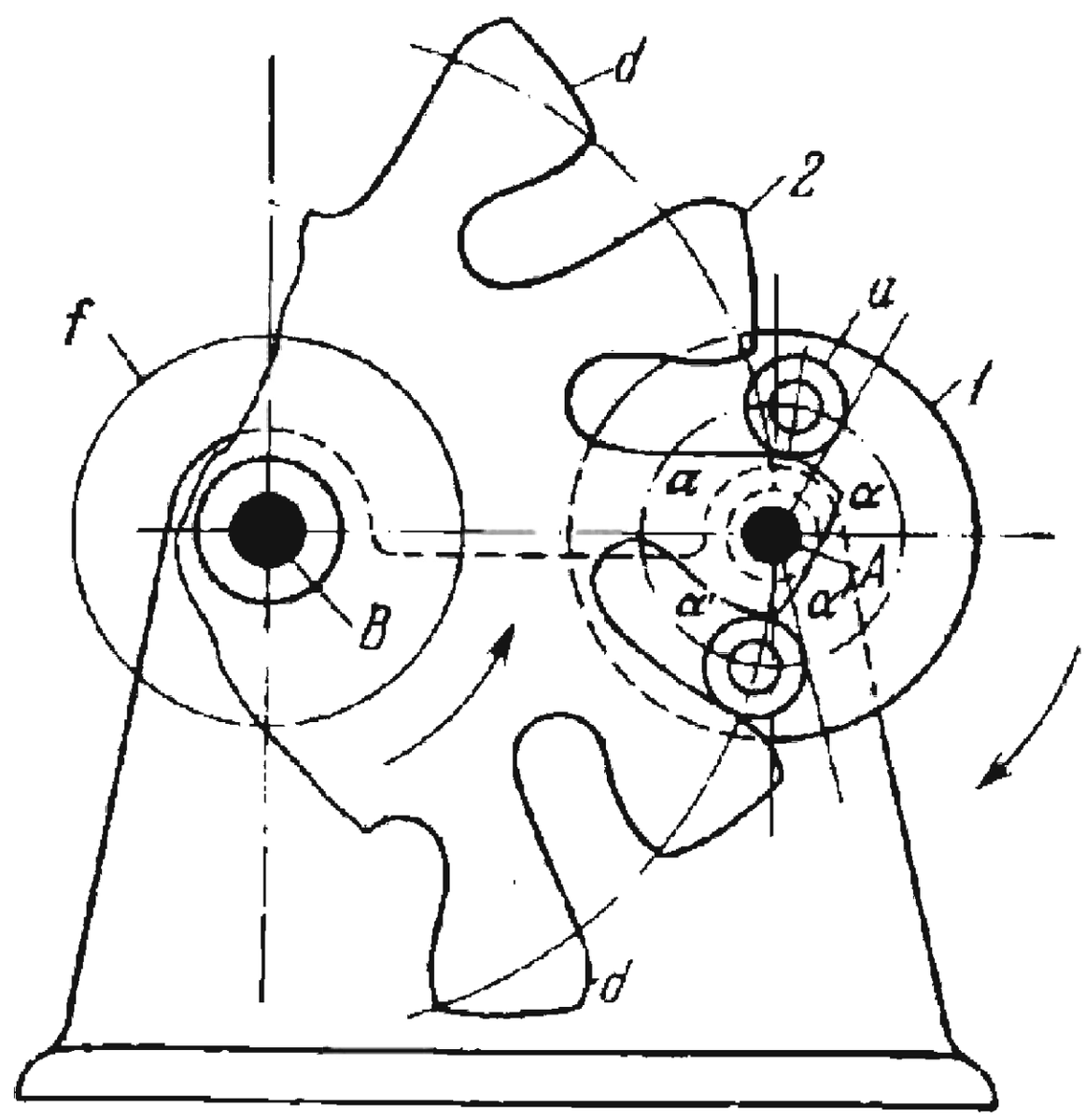

Pin wheel *1* with two pins *a* rotates about fixed axis *A* and meshes with teeth *d* of sprocket *2* which rotates about fixed axis *B*. The centres of the arcs at the top of teeth *d* lie on circle *f*. The profiles of teeth *d* consist of a circular arc at the top and two circular arcs α-α and α'-α' at the sides which are described from centre *A*. The remaining portions of the profiles are along curves which are equidistant to an epicycloid of a circle. Pitch radius r_1 of pin wheel *1* equals

$$r_1 = r + r_\alpha$$

where r is the radius of pin *a* and r_α is the radius of circular arcs α-α and α'-α'. When driving pin wheel *1* rotates continuously, driven sprocket *2* rotates intermittently with dwells during the periods when pin *a* engages arcs α-α and α'-α'. These arcs also serve as locking elements that prevent unintentional rotation of sprocket *2* during the dwells. To each revolution of pin wheel *1*, sprocket *2* turns through an angle corresponding to two teeth *d*. When pin wheel *1* rotates at uniform velocity, sprocket *2* rotates at uniform velocity (during its rotation periods).

2615	PIN-WHEEL DWELL MECHANISM WITH NONUNIFORM GEAR ROTATION	PG D

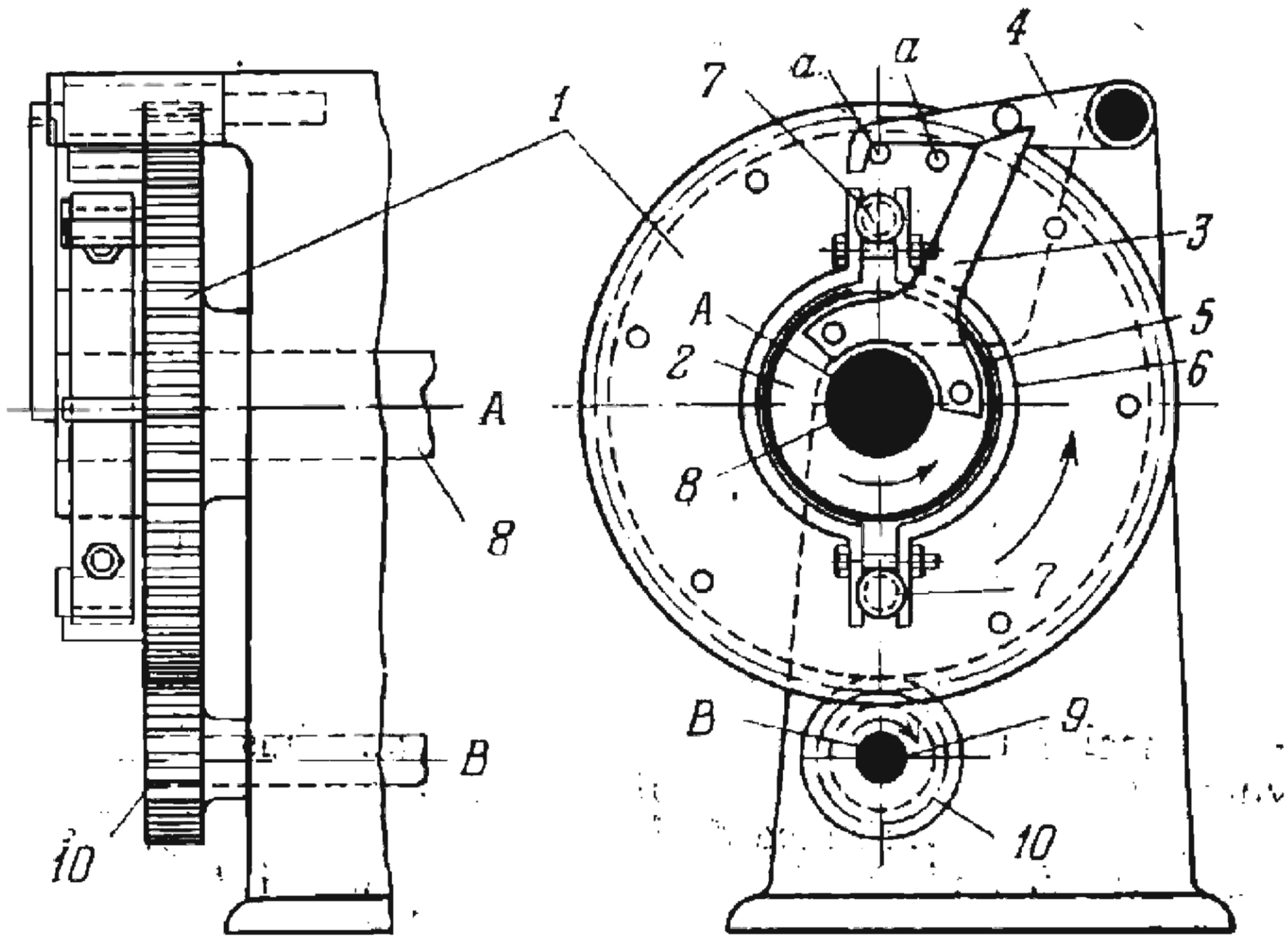

Bushing *2* and lever *3* are keyed on shaft *8* which rotates about fixed axis *A*. Gear *1* carries pins *a* and is freely mounted on shaft *8* and meshes with gear *10* keyed on shaft *9*, which rotates about fixed axis *B*. When shaft *8* rotates, lever *3* periodically lifts pawl *4*, thereby releasing gear *1*. At this, bushing *2*, by means of friction lining *5* (tightened by clamp *6*) and pins *7*, turns gear *1* through a certain angle depending upon the distance between adjacent pins *a*. Thus, when shaft *8* rotates continuously, shaft *9* rotates intermittently with dwells whose length is determined by the arrangement of pins *a*.

2616	PIN-RATCHET-WHEEL INTERLOCKING MECHANISM	PG D

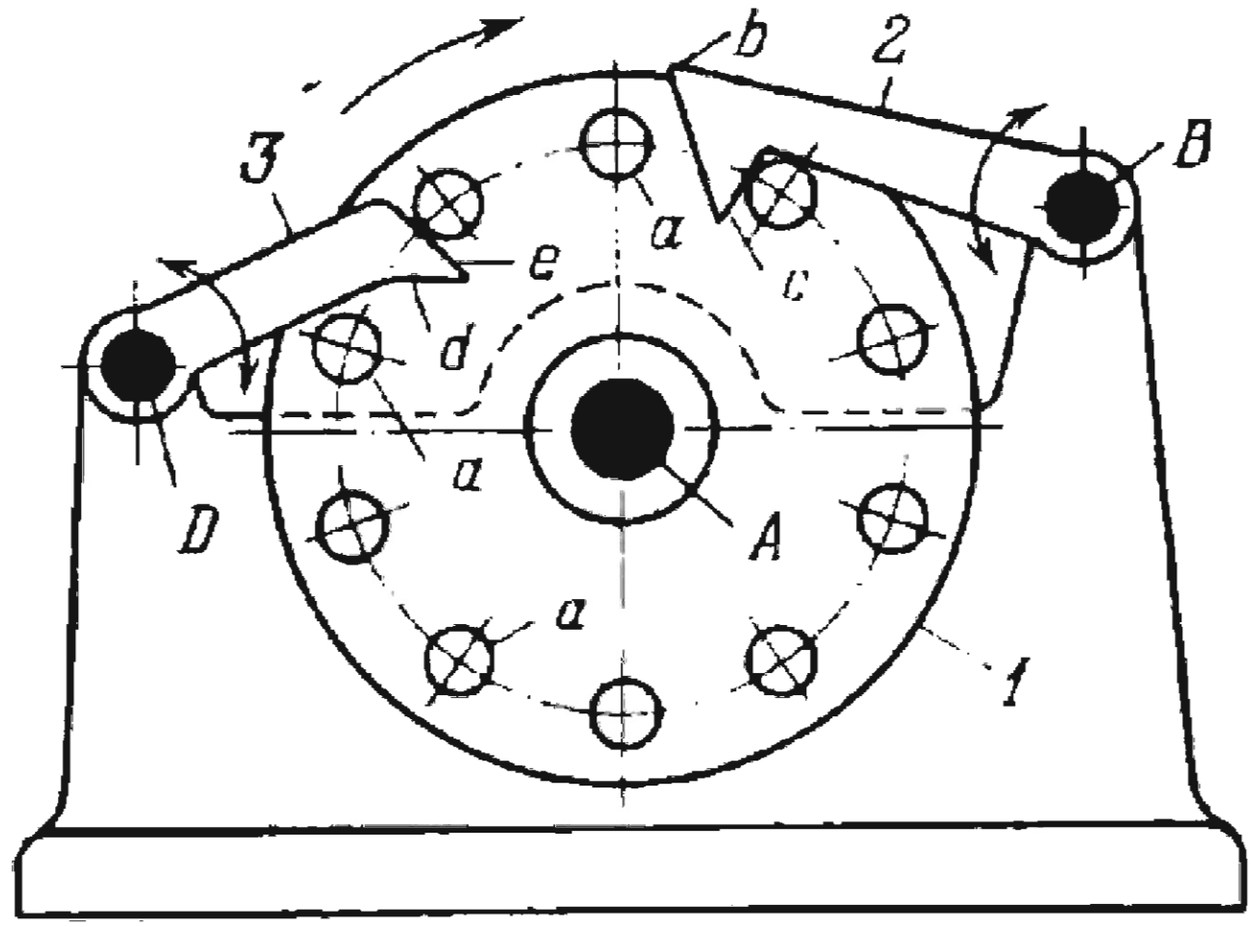

Pin wheel *1* rotates about fixed axis *A* and has pins *a*. When wheel *1* rotates clockwise, pins *a* engage bevelled face *b* of pawl *2* and bevelled face *d* of pawl *3*, turning the pawls about fixed axes *B* and *D*. Reverse rotation of wheel *1* is prevented because pins *a* run against faces *c* and *e* of pawls *2* and *3*.

2617	PIN-WHEEL DWELL MECHANISM	PG D

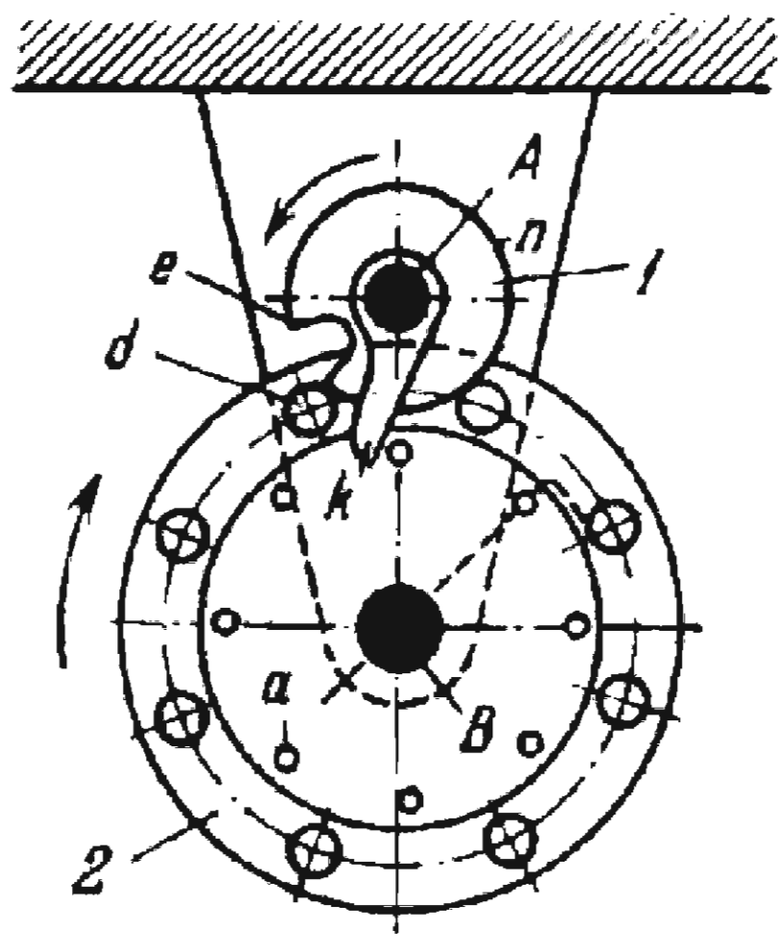

Link *1* rotates about fixed axis *A* and has finger *k* and slot *e*. Finger *k* meshes with pins *a* of pin wheel *2* which rotates about fixed axis *B*, and slot *e* engages pins *d* of wheel *2*. The heads of pins *a* and *d* are located in parallel planes. When link *1* rotates continuously, finger *k* engages a pin *a*, turning pin wheel *2* until slot *e* engages a pin *d*. During the dwells, concentric locking surface *n* engages two adjacent pins *d* to prevent unintentional rotation of wheel *2*. When driving link *1* rotates at uniform velocity, driven wheel *2* rotates intermittently with eight rotation and eight dwell periods during each revolution.

2618	PIN-WHEEL-CAM SPATIAL DWELL MECHANISM	PG D

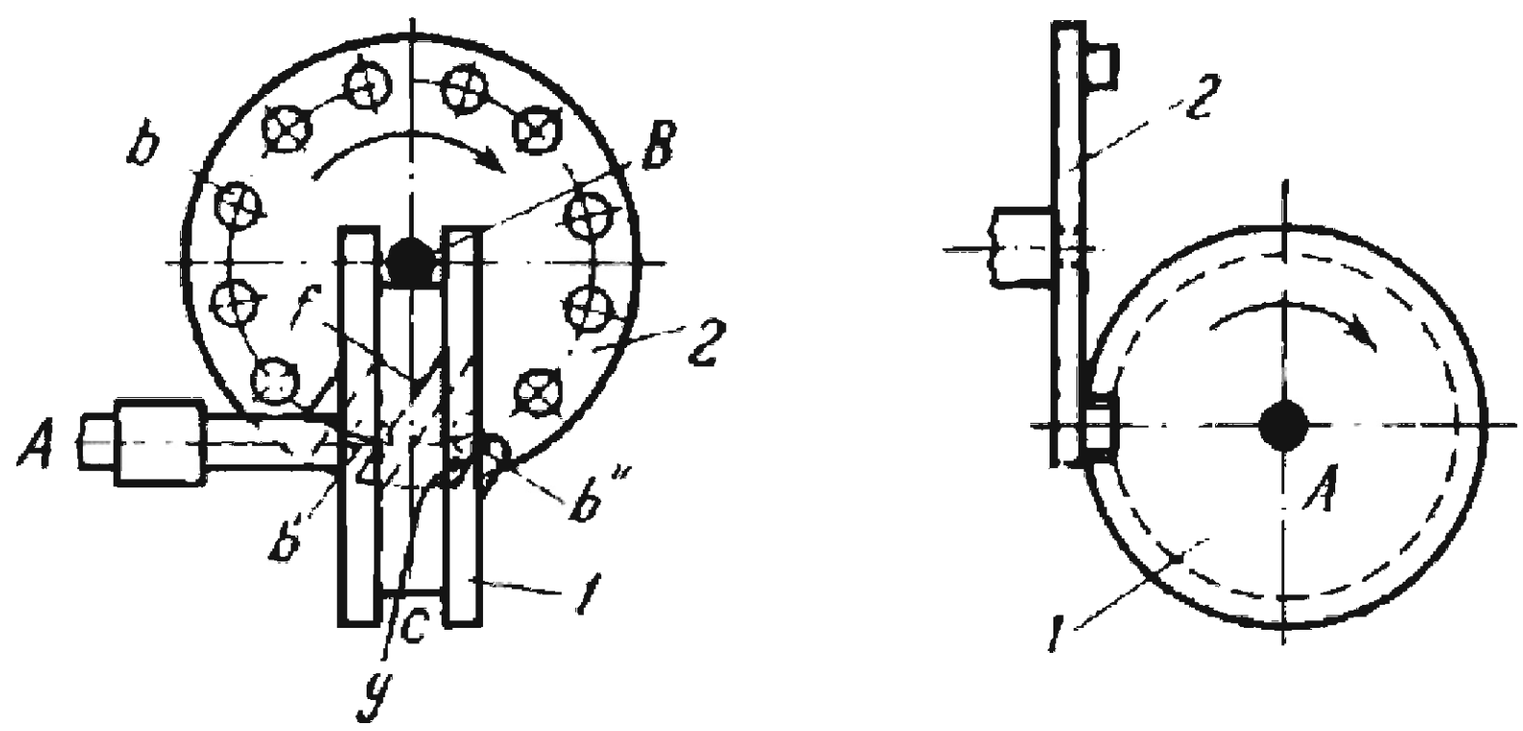

Driving member (cam) *1* rotates about fixed axis *A* and has annular groove *c* corresponding in width to the diameter of pins *b* carried by pin wheel *2* which rotates about fixed axis *B*. Annular groove *c* is not continuous as there are inclined openings on both sides. When cam *1* rotates clockwise, inclined surface *f* pushes pin *b'* to the left, turning wheel *2* clockwise. At the same time, pin *b''* enters the opening on the opposite side and is pushed to the central position by inclined surface *g*. Pin *b''* remains in groove *c* until cam *1* makes one revolution, thus locking wheel *2* against unintentional rotation. Then pin *b''* passes out on the opposite side and another pin *b* is engaged by surface *g* and groove *c*.

2619	PIN-WHEEL DWELL MECHANISM	PG D

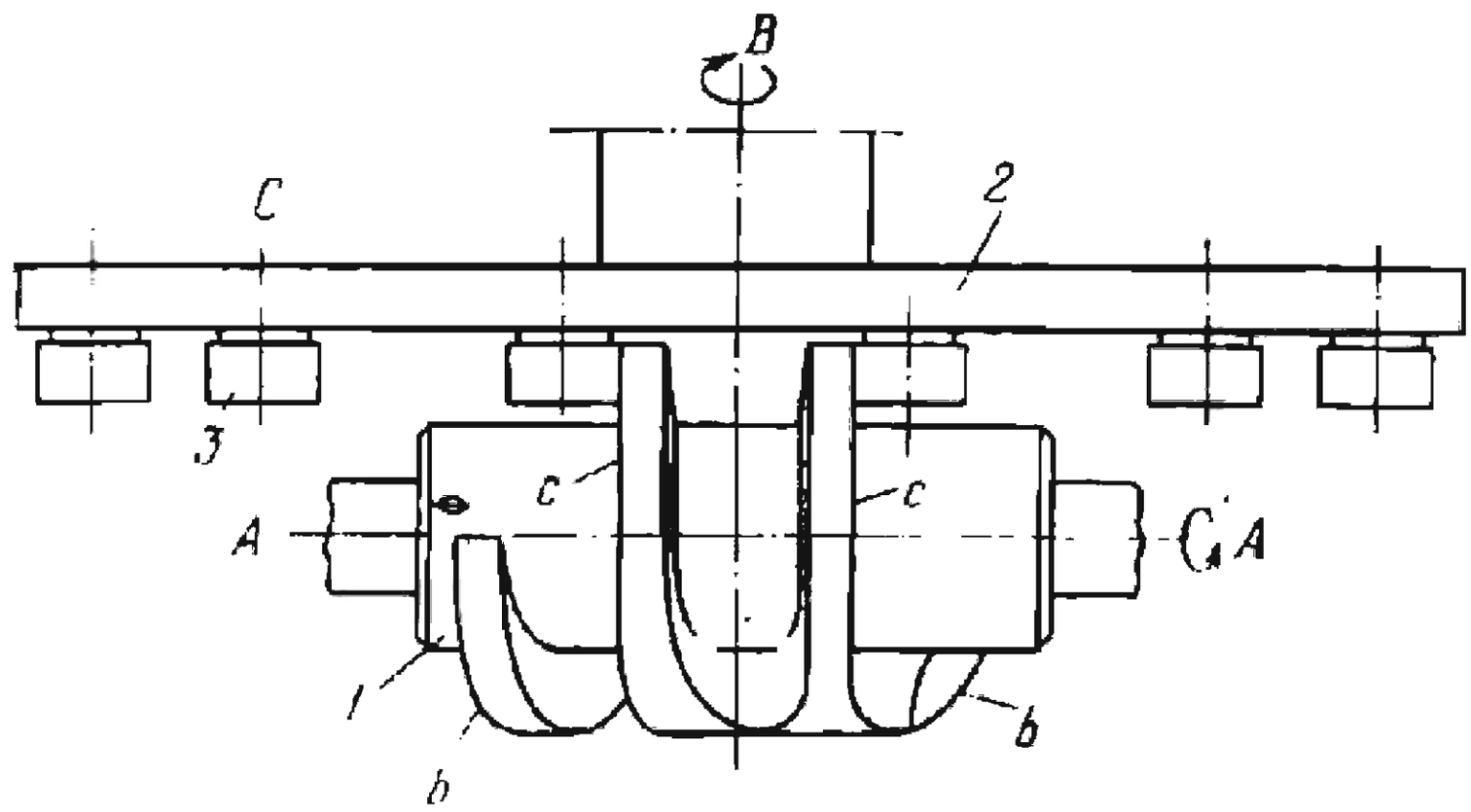

Link *1* rotates about fixed axis *A* and has teeth *b* and *c*. Pin wheel *2* rotates about fixed axis *B* and has rollers (pins) *3* rotating about axes *C* of wheel *2*. When link *1* rotates continuously, teeth *b* engage a roller *3* and turn wheel *2*. After this, teeth *c* enter the space between two adjacent rollers *3'*, locking wheel *2* during its dwell period.

2620	PIN-WHEEL-CAM SPATIAL DWELL MECHANISM	PG D

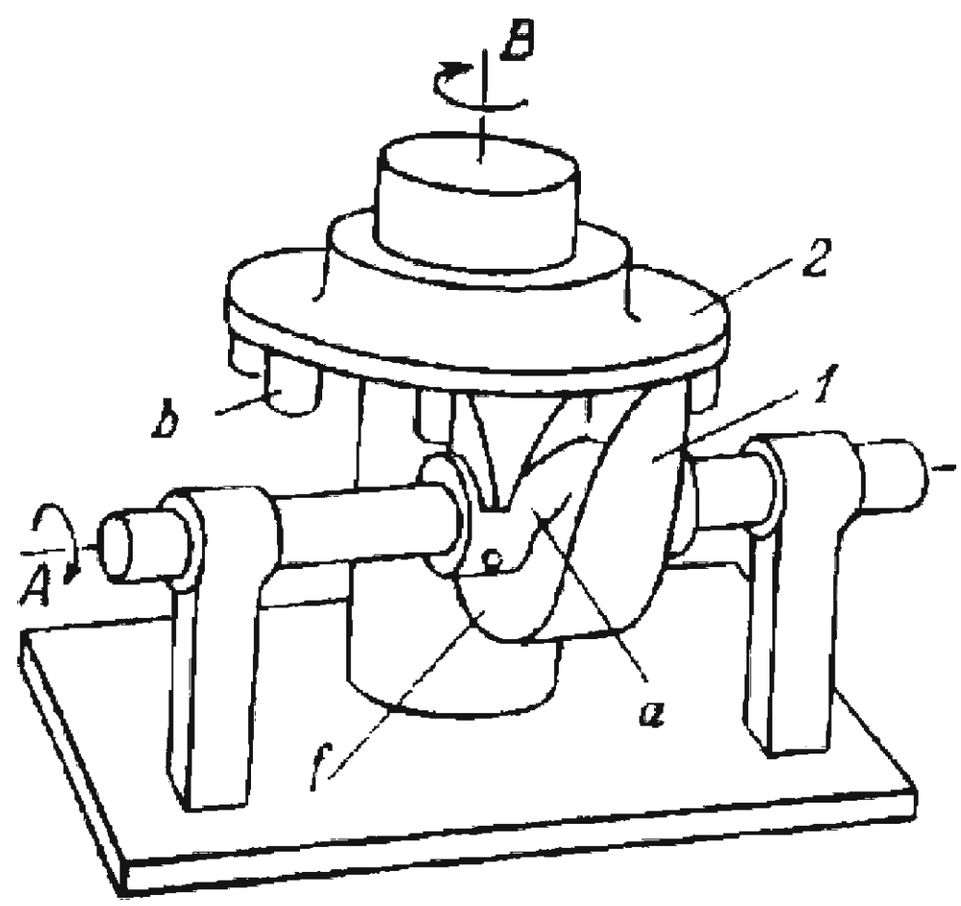

Cylinder cam *1* rotates about fixed axis *A* and has helical cam slot *a* which periodically engages a pin *b* of pin wheel *2*. Pin wheel *2* rotates about fixed axis *B*. When driving cam *1* rotates continuously, driven pin wheel *2* rotates intermittently with short dwells, during which it is locked against unintentional rotation by parallel faces *f* of cam *1* which fit between adjacent pins *b*.

2621	PIN-WHEEL-CAM DWELL MECHANISM	PG D

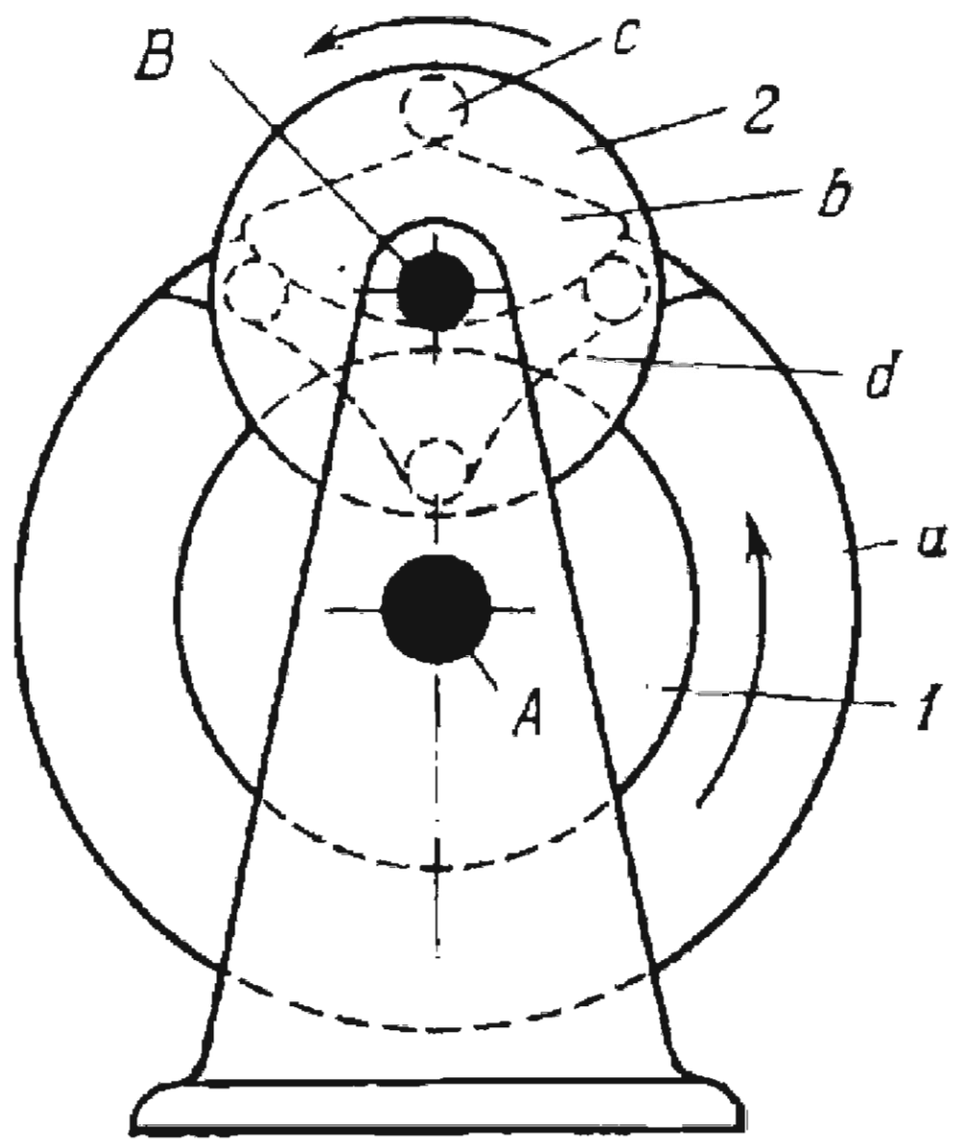

Link *1* has annular projection *a* and rotates about fixed axis *A*. When driving link *1* rotates, cam *b* (shown by dash lines) rigidly mounted on link *1*, engages a pin *c* of driven pin wheel *2*, turning the wheel about fixed axis *B*. At this, two other pins *c* slide along slots *d* of annular projection *a*. When two pins *c* of pin wheel *2* are inside and two outside, annular projection *a* freely passes between them and wheel *2* has a dwell until cam *b*, after one revolution, engages the next pin *c* on wheel *2*. Thus, to each revolution of driving link *1*, driven wheel *2* turns through an angle of 90°.

2622	PIN-WHEEL-LEVER DWELL MECHANISM	PG D

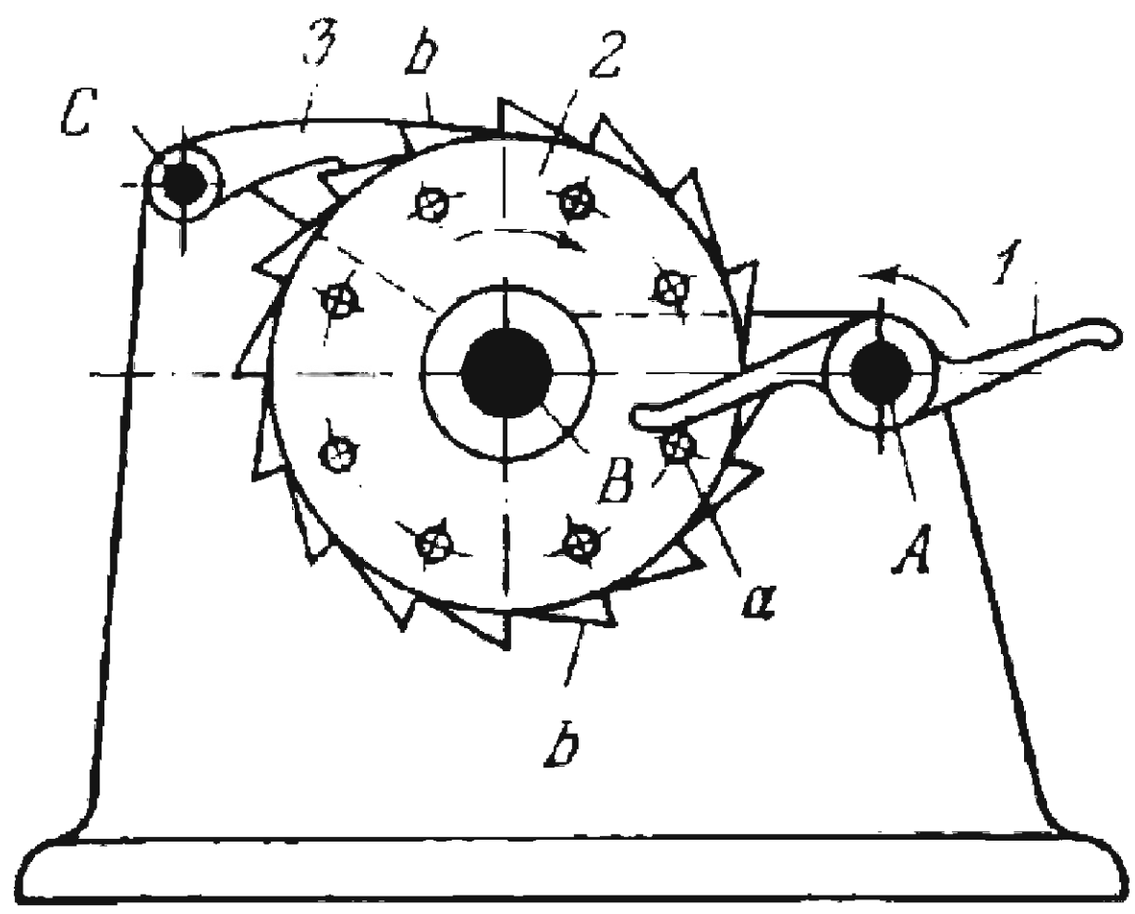

Two-arm lever *1* rotates about fixed axis *A* and periodically engages pins *a* of pin wheel *2* which rotates about fixed axis *B*. Pin wheel *2* has ratchet teeth *b* which are engaged by pawl *3*. Pawl *3* turns about fixed axis *C* and prevents counterclockwise rotation of wheel *2*. The transmission ratio from lever *1* to wheel *2* is

$$i_{12}=\frac{\omega_1}{\omega_2}=\frac{z_2}{2}$$

where ω_1 and ω_2 are the angular velocities of lever *1* and wheel *2*, and z_2 is the number of pins *a*. Lever *1* and wheel *2* rotate in opposite directions.

2623	FOUR-SLOT EXTERNAL GENEVA WHEEL MECHANISM	PG GW

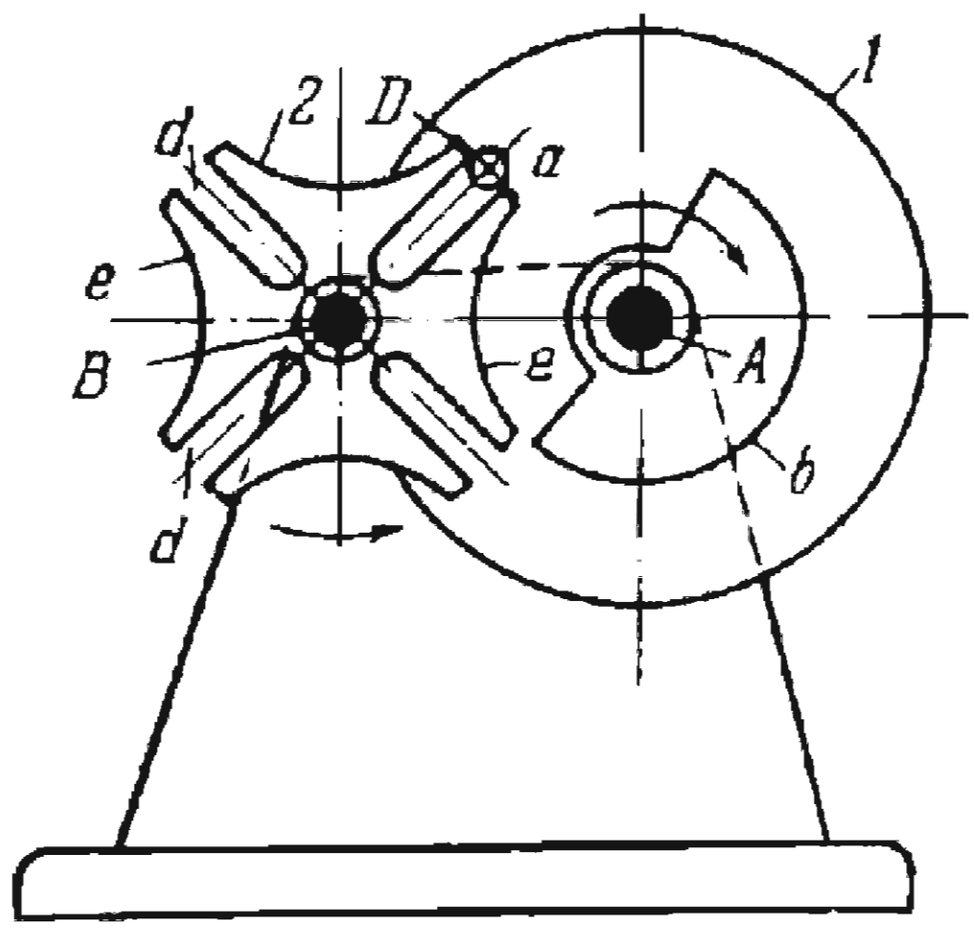

Pin wheel *1* rotates about fixed axis *A* and carries pin *a* which consecutively engages straight radial slots *d* of Geneva wheel *2*. Geneva wheel *2* rotates about fixed axis *B* and its slots *d* are located symmetrically at angles of 90° between the axes of adjacent slots. Pin wheel *1* has concentric locking surface *b* which engages concave locking surfaces *e* of Geneva wheel *2* during its idle periods. When driving pin wheel *1* rotates continuously at uniform velocity, driven Geneva wheel *2* rotates intermittently at nonuniform velocity and has four rotation periods t_r and four idle periods t_i. Locking surfaces *b* and *e* prevent unintentional rotation of Geneva wheel *2* during its idle periods. The time of one revolution of pin wheel *1* is

$$T = t_r + t_i.$$

The angles of rotation of pin wheel *1* corresponding to an idle and to a rotation period of Geneva wheel *2* equal $\varphi_i = 270°$ and $\varphi_r = 90°$. The angle of rotation of Geneva wheel *2* to each revolution of pin wheel *1* is $\varphi_G = 90°$. The rotation and idle factors are $p = t_r/T = 0.25$ and $q = t_i/T = 0.75$. The working time coefficient is $k = p/q = 0.33$. The transmission ratio from the Geneva wheel to the pin wheel is

$$i_{21} = \frac{\omega_2}{\omega_1} = \frac{\lambda(\cos\varphi_1 - \lambda)}{1 - 2\lambda\cos\varphi_1 + \lambda^2}$$

where $\lambda = R/L$, R is radius $\overline{AD}$, L is centre-to-centre distance $\overline{AB}$, φ_1 is the instantaneous angle of rotation of pin wheel *1* measured from line AB, and ω_1 and ω_2 are the angular velocities of pin wheel *1* and Geneva wheel *2*. The maximum value of the transmission ratio is

$$i_{21} = \frac{\omega_2}{\omega_1} = 2.41.$$

Coefficient χ characterizes angular acceleration ε_2 of Geneva wheel *2* at the instants when pin *a* begins and ends engagement with a slot *d*, and equals

$$\chi = \frac{\varepsilon_2}{\omega_1^2} = 1.$$

Pin wheel *1* and Geneva wheel *2* rotate in opposite directions.

2624	SIX-SLOT EXTERNAL GENEVA WHEEL MECHANISM	PG GW

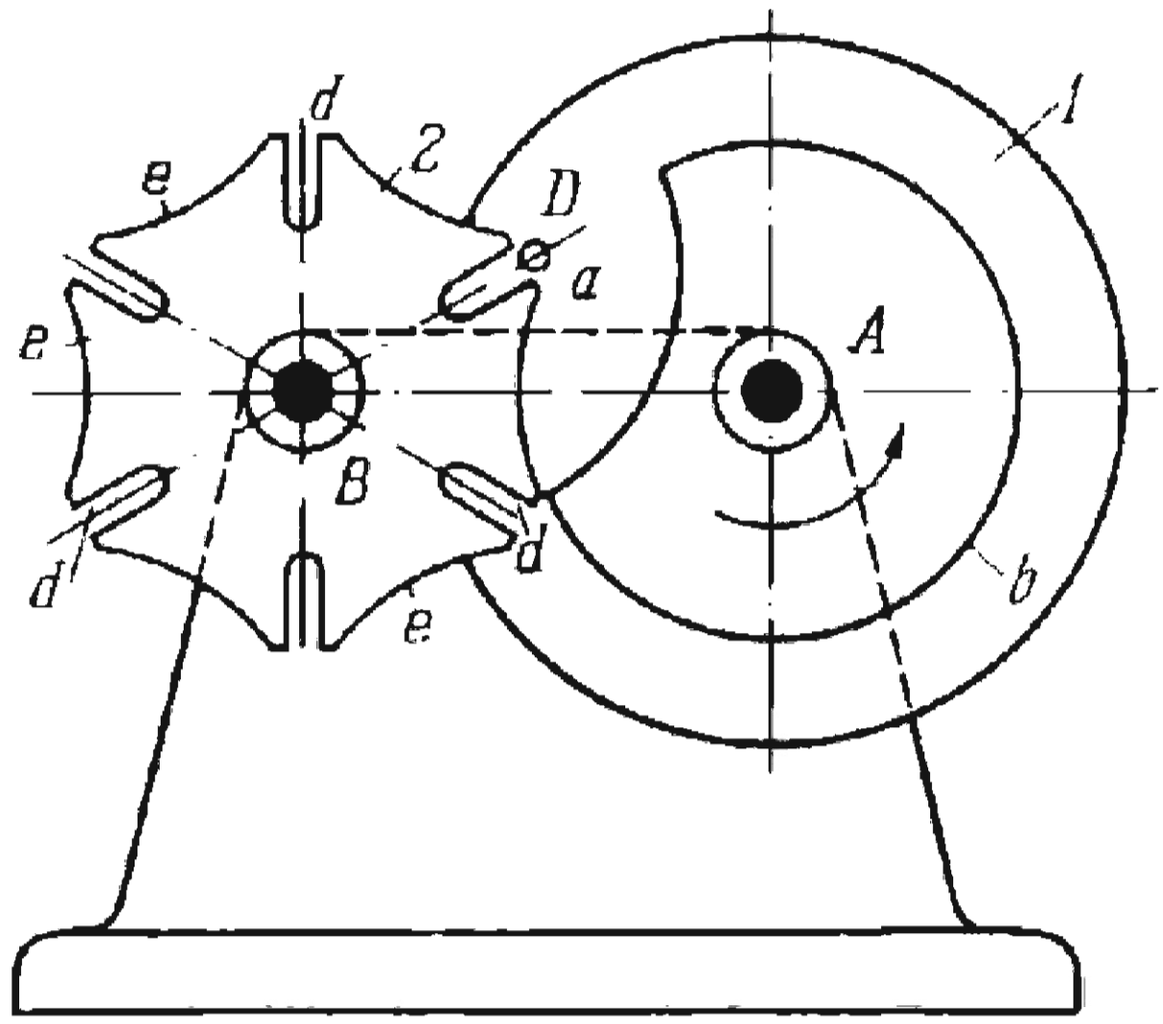

Pin wheel *1* rotates about fixed axis *A* and carries pin *a* which consecutively engages straight radial slots *d* of Geneva wheel *2*. Geneva wheel *2* rotates about fixed axis *B* and its slots *d* are located symmetrically at angles of 60° between the axes of adjacent slots. Pin wheel *1* has concentric locking surface *b* which engages concave locking surfaces *e* of Geneva wheel *2* during its idle periods. When driving pin wheel *1* rotates continuously at uniform velocity, driven Geneva wheel *2* rotates intermittently at nonuniform velocity and has six rotation periods t_r and six idle periods t_i. Locking surfaces *b* and *e* prevent unintentional rotation of Geneva wheel *2* during its idle periods. The time of one revolution of pin wheel *1* is

$$T = t_r + t_i.$$

The angles of rotation of pin wheel *1* corresponding to an idle and to a rotation period of Geneva wheel *2* equal $\varphi_i = 240°$ and $\varphi_r = 120°$. The angle of rotation of Geneva wheel *2* to each revolution of pin wheel *1* is $\varphi_G = 60°$. The rotation and idle factors are $p = t_r/T = 0.3333$ and $q = t_i/T = 0.6667$. The working time coefficient is $k = p/q = 0.5$. The transmission ratio from the Geneva wheel to the pin wheel is

$$i_{21} = \frac{\omega_2}{\omega_1} = \frac{\lambda(\cos\varphi_1 - \lambda)}{1 - 2\lambda\cos\varphi_1 + \lambda^2}$$

where $\lambda = R/L$, R is radius $\overline{AD}$, L is centre-to-centre distance $\overline{AB}$, φ_1 is the instantaneous angle of rotation of pin wheel *1* measured from line AB, and ω_1 and ω_2 are the angular velocities of pin wheel *1* and Geneva wheel *2*. The maximum value of the transmission ratio is

$$i_{21} = \frac{\omega_2}{\omega_1} = 1.$$

Coefficient χ characterizes angular acceleration ε_2 of Geneva wheel *2* at the instants when pin *a* begins and ends engagement with a slot *d*, and equals

$$\chi = \frac{\varepsilon_2}{\omega_1^2} = 0.577.$$

Pin wheel *1* and Geneva wheel *2* rotate in opposite directions.

2625	FOUR-SLOT INVERSE GENEVA WHEEL MECHANISM	PG GW

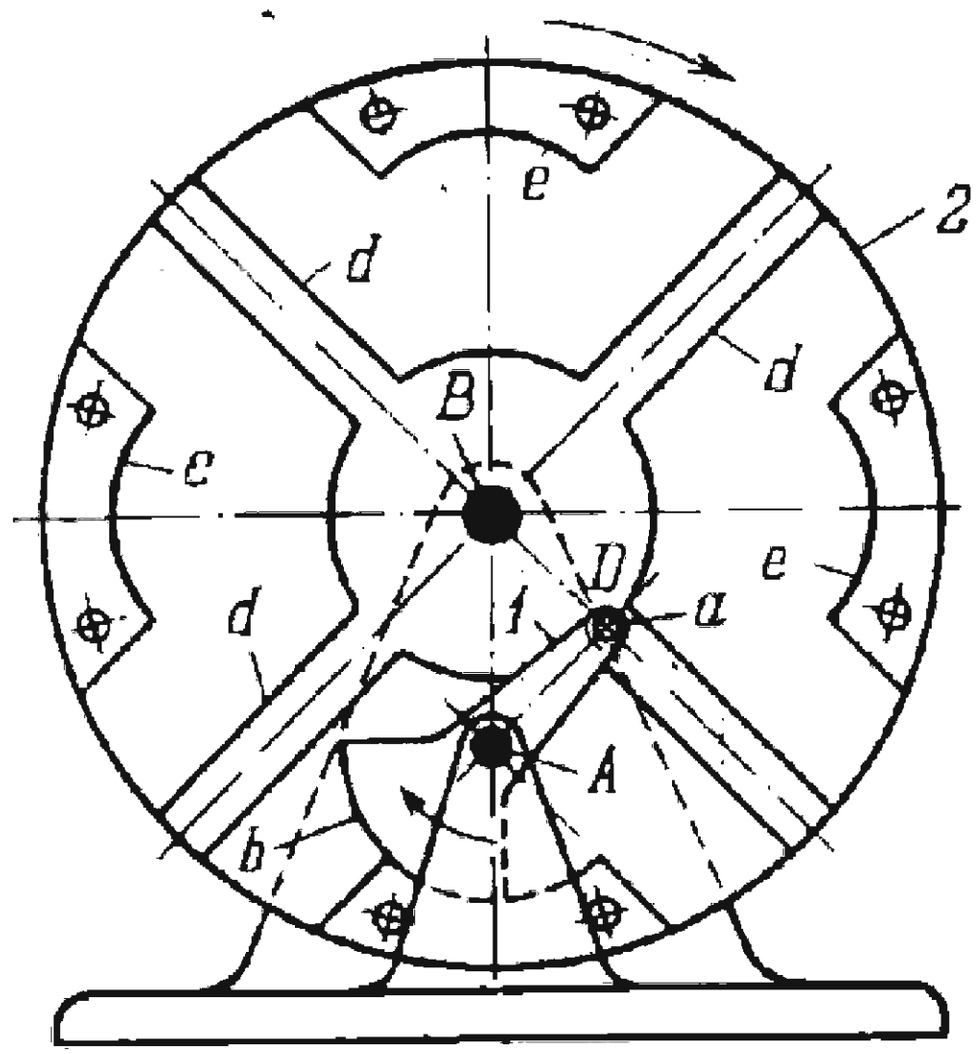

Driver *1* rotates about fixed axis *A* and carries pin *a* which consecutively engages straight radial slots *d* of Geneva wheel *2*. Geneva wheel *2* rotates about fixed axis *B* and its slots *d* are located symmetrically at angles of 90° between the axes of adjacent slots. Driver *1* has concentric locking surface *b* which engages concave locking surfaces *e* of Geneva wheel *2* during its idle periods. When driver *1* rotates continuously at uniform velocity, driven Geneva wheel *2* rotates intermittently at nonuniform velocity and has four rotation periods t_r and four idle periods t_i. Locking surfaces *b* and *e* prevent unintentional rotation of Geneva wheel *2* during its idle periods. The time of one revolution of driver *1* is

$$T = t_r + t_i.$$

The angles of rotation of driver *1* corresponding to an idle and to a rotation period of Geneva wheel *2* equal $\varphi_i = 90°$ and $\varphi_r = 270°$. The angle of rotation of Geneva wheel *2* to each revolution of driver *1* is $\varphi_G = 90°$. The rotation and idle factors are $p = t_r/T = 0.75$ and $q = t_i/T = 0.25$. The working time coefficient is $k = p/q = 3$. The transmission ratio from the Geneva wheel to the driver is

$$i_{21} = \frac{\omega_2}{\omega_1} = \frac{\lambda(\cos\varphi_1 - \lambda)}{1 - 2\lambda\cos\varphi_1 + \lambda^2}$$

where $\lambda = R/L$, R is radius $\overline{AD}$, L is centre-to-centre distance $\overline{AB}$, φ_1 is the instantaneous angle of rotation of driver *1* measured from line AB, and ω_1 and ω_2 are the angular velocities of driver *1* and Geneva wheel *2*. The maximum value of the transmission ratio is

$$i_{21} = \frac{\omega_2}{\omega_1} = 0.414.$$

Coefficient χ characterizes the angular acceleration ε_2 of Geneva wheel *2* at the instants when pin *a* begins and ends engagement with a slot *d*, and equals

$$\chi = \frac{\varepsilon_2}{\omega_1^2} = 1.$$

Driver *1* and Geneva wheel *2* rotate in the same direction.

2626	THREE-SLOT INVERSE GENEVA WHEEL MECHANISM	FG GW

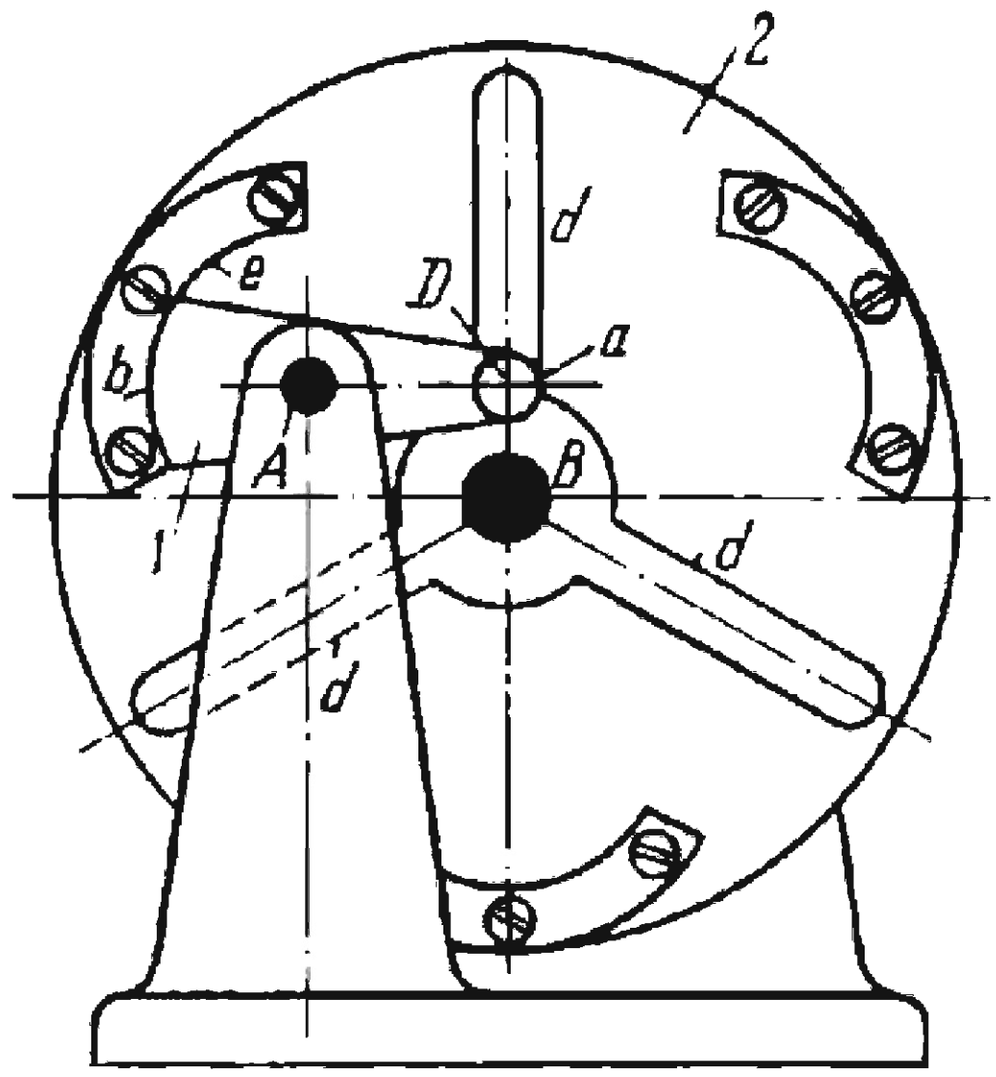

Driver *1* rotates about fixed axis *A* and carries pin *a* which consecutively engages straight radial slots *d* of Geneva wheel *2*. Geneva wheel *2* rotates about fixed axis *B* and its slots *d* are located symmetrically at angles of 120° between the axes of adjacent slots. Driver *1* has concentric locking surface *b* which engages concave locking surfaces *e* of Geneva wheel *2* during its idle periods. When driver *1* rotates continuously at uniform velocity, driven Geneva wheel *2* rotates intermittently at nonuniform velocity and has three rotation periods t_r and three idle periods t_i. Locking surfaces *b* and *e* prevent unintentional rotation of Geneva wheel *2* during its idle periods. The time of one revolution of driver *1* is

$$T = t_r + t_i.$$

The angles of rotation of driver *1* corresponding to an idle and to a rotation period of Geneva wheel *2* equal $\varphi_i = 60°$ and $\varphi_r = 300°$. The angle of rotation of Geneva wheel *2* to each revolution of driver *1* is $\varphi_G = 120°$. The rotation and idle factors are $p = t_r/T = 0.8333$ and $q = t_i/T = 0.1667$. The working time coefficient is $k = p/q = 5$. The transmission ratio from the Geneva wheel to the driver is

$$i_{21} = \frac{\omega_2}{\omega_1} = \frac{\lambda(\cos\varphi_1 - \lambda)}{1 - 2\lambda\cos\varphi_1 + \lambda^2}$$

where $\lambda = R/L$, R is radius $\overline{AD}$, L is centre-to-centre distance $\overline{AB}$, φ_1 is the instantaneous angle of rotation of driver *1* measured from line AB, and ω_1 and ω_2 are the angular velocities of driver *1* and Geneva wheel *2*. The maximum value of the transmission ratio is

$$i_{21} = \frac{\omega_2}{\omega_1} = 0.464.$$

Coefficient χ characterizes the angular acceleration ε_2 of Geneva wheel *2* at the instants when pin *a* begins and ends engagement with slot *d*, and equals

$$\chi = \frac{\varepsilon_2}{\omega_1^2} = 1.729.$$

Driver *1* and Geneva wheel *2* rotate in the same direction.

2627	FOUR-SLOT GENEVA WHEEL MECHANISM WITH UNEQUAL IDLE PERIODS	PG GW

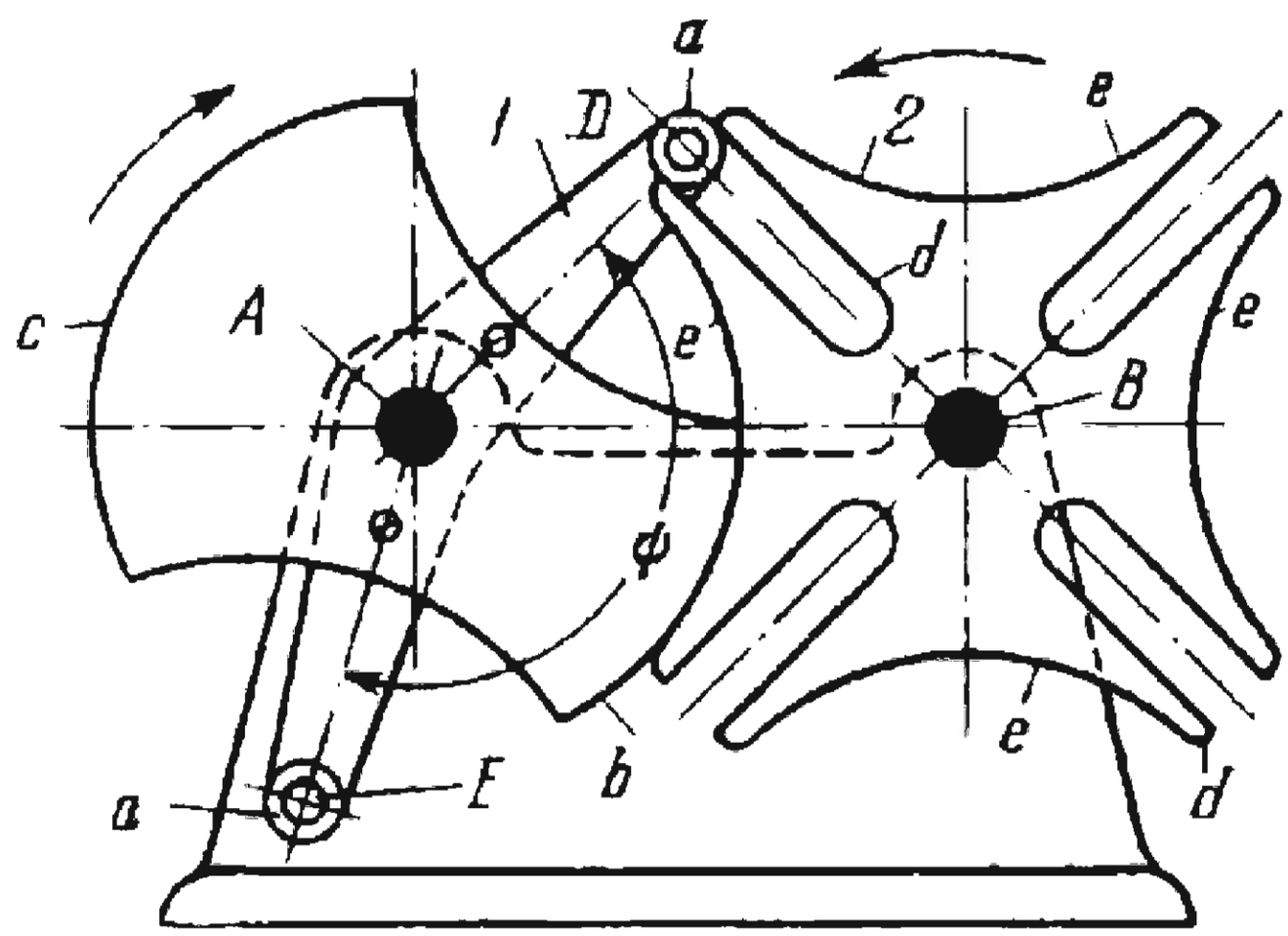

Driver *1* rotates about fixed axis *A* and carries two pins *a* which consecutively engage straight radial slots *d* of Geneva wheel *2*. Geneva wheel *2* rotates about fixed axis *B* and its slots are located symmetrically at angles of 90° between the axes of adjacent slots. Driver *1* has concentric locking surfaces *b* and *c* which engage concave locking surfaces *e* of Geneva wheel *2* during its idle periods. The radii of pins *a* are equal ($\overline{AD} = \overline{AE}$). When driver *1* rotates continuously at uniform velocity, Geneva wheel *2* rotates intermittently at nonuniform velocity and has four rotation periods and four idle periods. Locking surfaces *b*, *c* and *e* prevent unintentional rotation of Geneva wheel *2* during its idle periods. Geneva wheel *2* has two different idle periods. One corresponds to rotation of driver *1* through the angle $\varphi_1' = \psi - 90°$ and the other to its rotation through the angle $\varphi_1'' = 270° - \psi$, where ψ is the angle between lines *AD* and *AE*. Driver *1* and Geneva wheel *2* rotate in opposite directions.

2628	FOUR-SLOT GENEVA WHEEL MECHANISM WITH UNEQUAL IDLE PERIODS AND UNEQUAL ROTATION PERIODS	PG GW

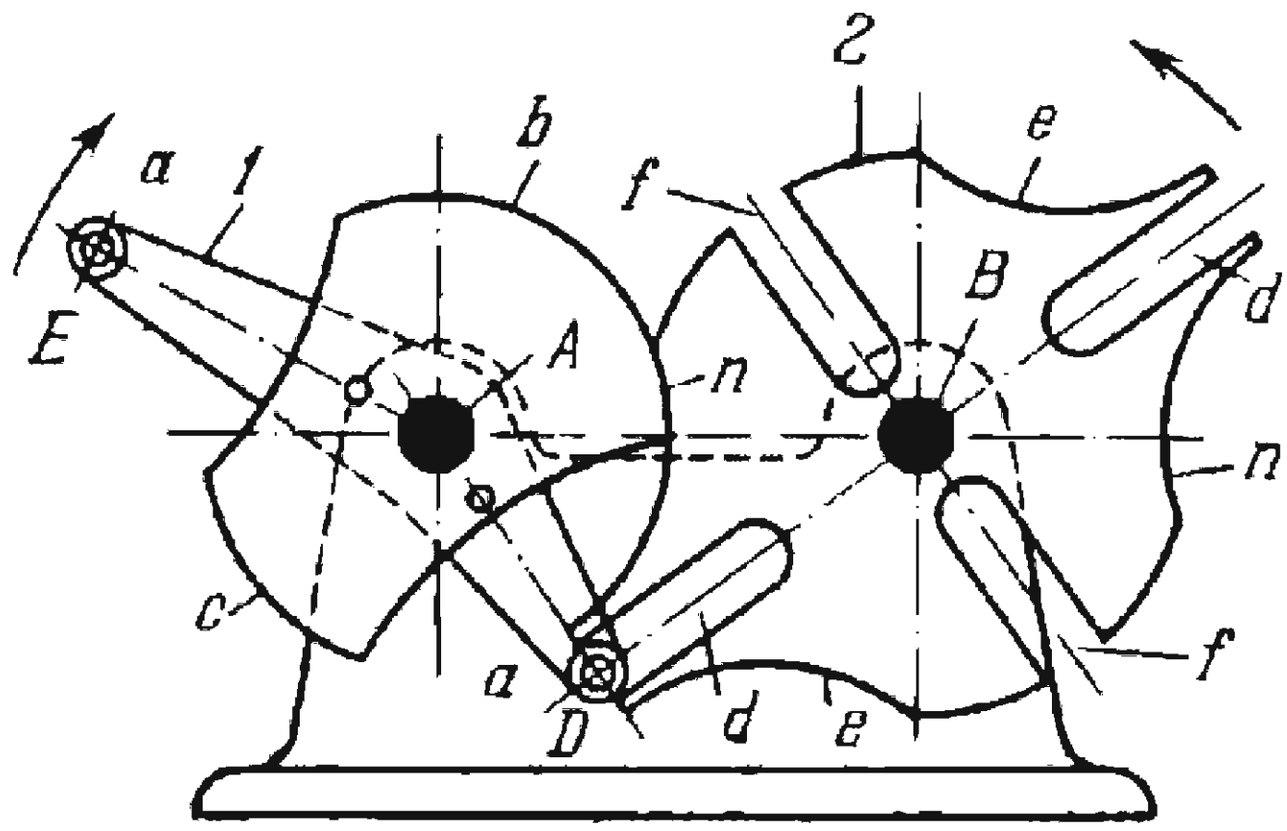

Driver *1* rotates about fixed axis *A* and carries two pins *a* which consecutively engage straight radial slots *d* and *f* of Geneva wheel *2*. Geneva wheel *2* rotates about fixed axis *B* and its slots *d* and *f* are located symmetrically at angles of 90° between the axes of adjacent slots *d* and *f*. Driver *1* has concentric locking surfaces *b* and *c* which engage concave locking surfaces *e* and *n* of Geneva wheel *2* to prevent its unintentional rotation during its idle periods. The radii of pins *a* are not equal ($\overline{AD} \neq \overline{AE}$). When driver *1* rotates continuously at uniform velocity, Geneva wheel *2* rotates intermittently at nonuniform velocity and has four rotation periods and four idle periods. The rotation periods, as well as the idle periods, change after each half revolution of driver *1*. Driver *1* and Geneva wheel *2* rotate in opposite directions.

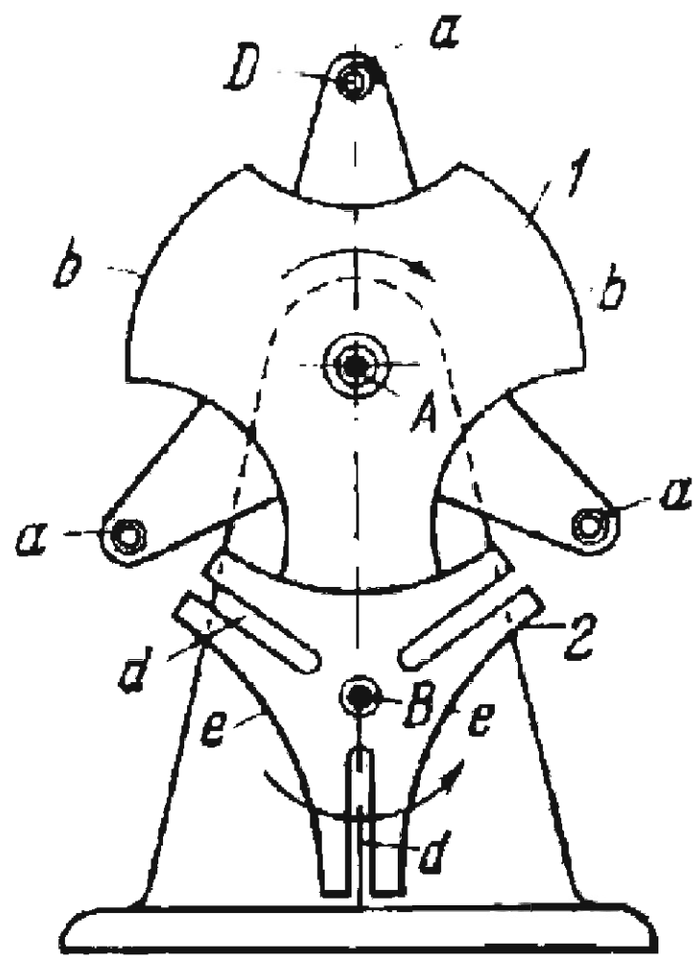

Pin wheel *1* rotates about fixed axis *A* and carries three pins *a* which consecutively engage straight radial slots *d* of Geneva wheel *2*. Geneva wheel *2* rotates about fixed axis *B*. Pins *a* are located at the same radius from point *A* with angles of 120° between lines joining their centres to point *A*. Slots *d* of Geneva wheel *2* are located symmetrically, also at angles of 120° between the axes of adjacent slots. Pin wheel *1* has three concentric locking surfaces *b* which engage concave locking surfaces *e* of Geneva wheel *2* to prevent its unintentional rotation during its idle periods. When pin wheel *1* rotates continuously at uniform velocity, Geneva wheel *2* rotates intermittently at nonuniform velocity and has three rotation periods t_r and three idle periods t_i. The time of one revolution of pin wheel *1* is

$$T = 3t_r + 3t_i.$$

The angles of rotation of pin wheel *1* corresponding to an idle and to a rotation period of Geneva wheel *2* are $\varphi_i = 60°$ and $\varphi_r = 60°$. The angle of rotation of Geneva wheel *2* to each third of a revolution of pin wheel *1* is $\varphi_G = 120°$. The rotation and idle factors are $p = t_r/T = 0.1677$ and $q = t_i/T = 0.1677$. The working time coefficient is $k = p/q = 1$. The transmission ratio from the Geneva wheel to the pin wheel is

$$i_{21} = \frac{\omega_2}{\omega_1} = \frac{\lambda(\cos\varphi_1 - \lambda)}{1 - 2\lambda\cos\varphi_1 + \lambda^2}$$

where $\lambda = R/L$, R is radius $\overline{AD}$, L is centre-to-centre distance $\overline{AB}$, φ_1 is the instantaneous angle of rotation of pin wheel *1*, and ω_1 and ω_2 are the angular velocities of pin wheel *1* and Geneva wheel *2*. Pin wheel *1* and Geneva wheel *2* rotate in opposite directions.

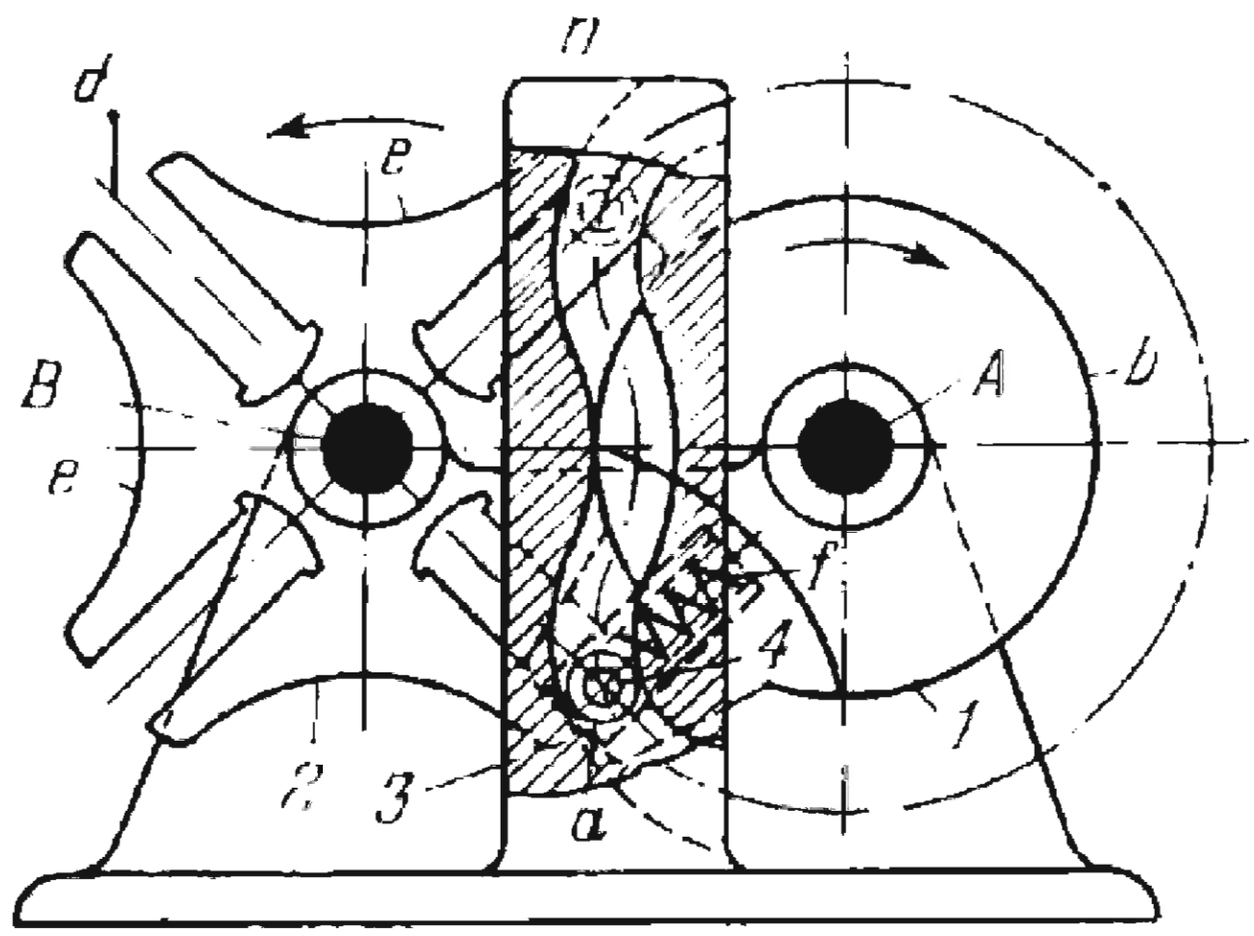

Driver *1* rotates about fixed axis *A* and carries pin *a* mounted on slider *4* which moves along a slot of driver *1*. Slider *4* is connected to driver *1* by spring *f*. Pin *a* consecutively engages straight radial slots *d* of Geneva wheel *2* which rotates about fixed axis *B*. Pin *a* simultaneously slides along curvilinear slot *n* of upright *3*. Slots *d* are located symmetrically at angles of 90° between the axes of adjacent slots. Driver *1* has concentric locking surface *b* which engages concave locking surfaces *e* of Geneva wheel *2* to prevent its unintentional rotation during its idle periods. The shape of slot *n* is designed so that for rotation of driver *1* at uniform velocity, Geneva wheel *2* also rotates at uniform velocity during its rotation periods t_r. Geneva wheel *2* has four rotation periods t_r and four idle periods t_i. The time of one revolution of driver *1* is

$$T = t_r + t_i.$$

The angles of rotation of driver *1* corresponding to an idle and to a rotation period of Geneva wheel *2* are $\varphi_i = 270°$ and $\varphi_r = 90°$. The angle of rotation of Geneva wheel *2* to each revolution of driver *1* is $\varphi_G = 90°$. The rotation and idle factors are $p = t_r/T = 0.25$ and $q = t_i/T = 0.75$. The working time coefficient is $k = p/q = 0.33$. Driver *1* and Geneva wheel *2* rotate in opposite directions.

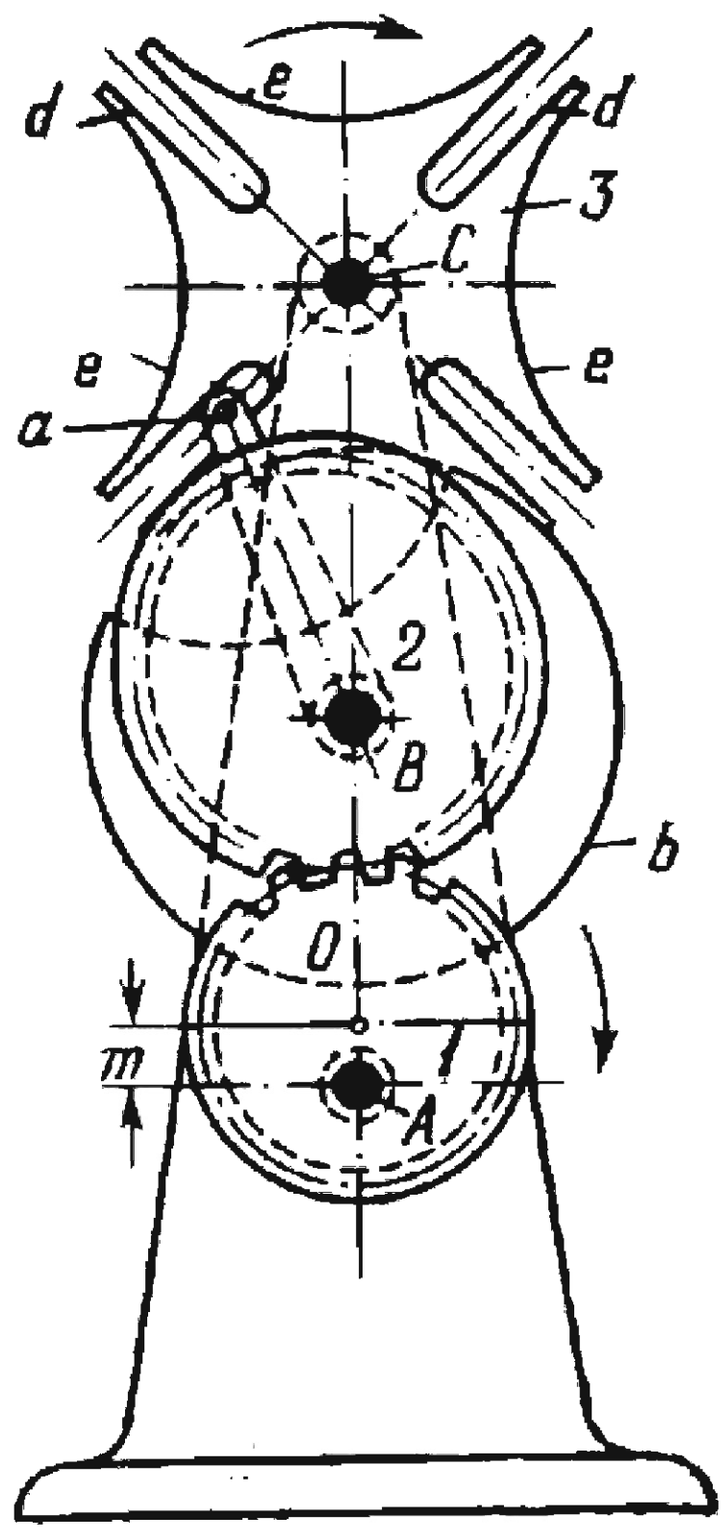

Circular gear *1* rotates about eccentrically located fixed axis *A* and meshes with oval gear *2* which rotates about fixed axis *B*. Gear *2* carries pin *a* which consecutively engages straight radial slots *d* of Geneva wheel *3*. Geneva wheel *3* rotates about fixed axis *C* and its slots *d* are located symmetrically at angles of 90° between the axes of adjacent slots. Gear *2* has concentric locking surface *b* which engages concave locking surfaces *e* of Geneva wheel *3* to prevent its unintentional rotation during its idle periods. Geneva wheel *3* has four rotation periods t_r and four idle periods t_i. The time of one revolution of gear *2* is

$$T = t_r + t_i.$$

The angles of rotation of gear *2* corresponding to an idle and to a rotation period of Geneva wheel *3* are $\varphi_i = 270°$ and $\varphi_r = 90°$. The angle of rotation of Geneva wheel *3* to each revolution of gear *2* is $\varphi_G = 90°$. When gear *1* rotates at uniform velocity, gear *2* rotates at nonuniform velocity and transmits nonuniform rotation to Geneva wheel *3* with reduced rotation periods t_r. The rotation periods of Geneva wheel *3* can be varied by changing eccentricity *m* of gear *1*. Gear *1* and Geneva wheel *3* rotate in the same direction.

2632	SIX-SLOT GENEVA WHEEL MECHANISM WITH A LOCKING LEVER	PG GW

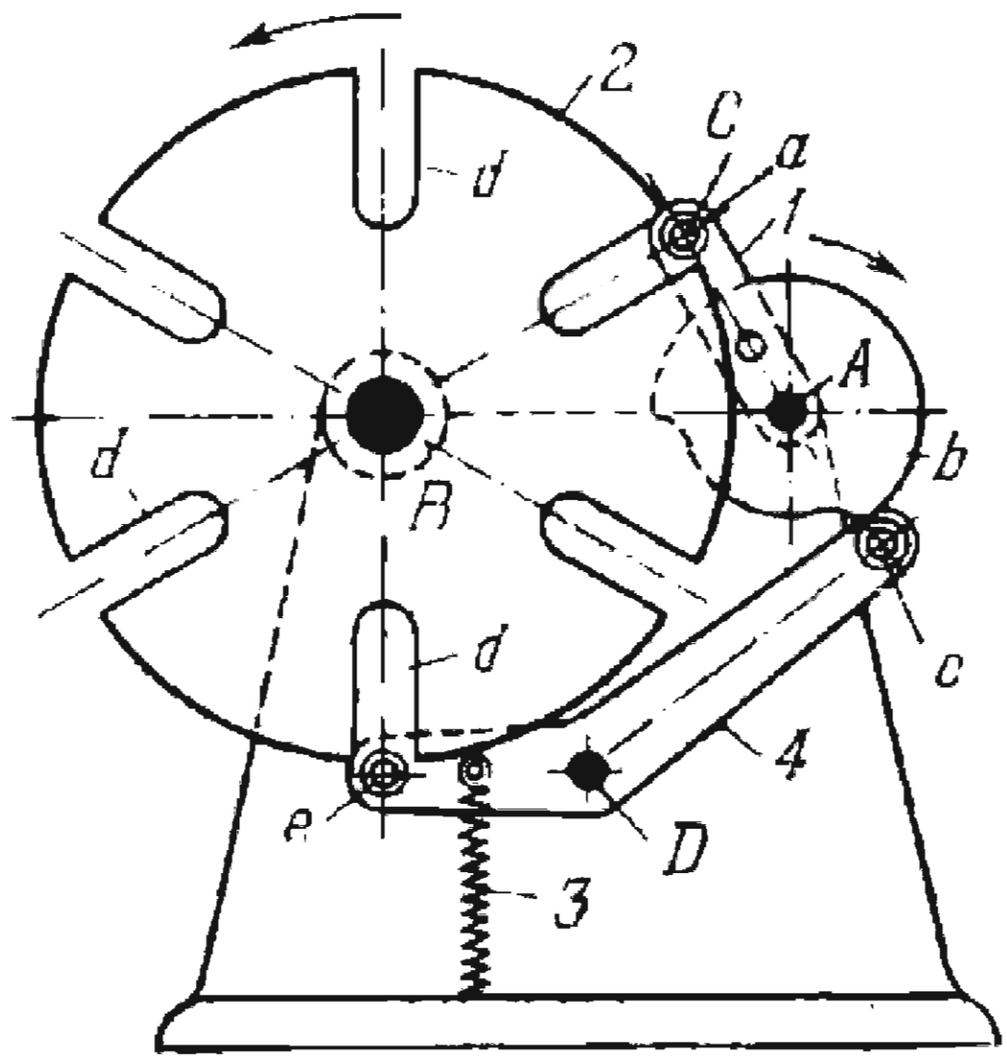

Driver *1* rotates about fixed axis *A* and carries pin *a* which consecutively engages straight radial slots *d* of Geneva wheel *2*. Geneva wheel *2* rotates about fixed axis *B* and its slots are located symmetrically at angles of 60° between the axes of adjacent slots. Driver *1* is rigidly attached to cam *b* which actuates roller *c*, periodically turning two-arm lever *4* about fixed axis *D*. At this, roller *e* enters a slot *d* of Geneva wheel *2* to prevent its unintentional rotation during its idle periods. Lever *4* is held with its roller *c* contacting cam *b* by spring *3*. When driver *1* rotates continuously at uniform velocity, Geneva wheel *2* rotates intermittently at nonuniform velocity with six rotation periods t_r and six idle periods t_i. The time of one revolution of driver *1* is

$$T = t_r + t_i.$$

The angles of rotation of driver *1* corresponding to an idle and to a rotation period of Geneva wheel *2* are $\varphi_i = 240°$ and $\varphi_r = 120°$. The angle of rotation of Geneva wheel *2* to each revolution of driver *1* is $\varphi_G = 60°$. The rotation and idle factors are $p = t_r/T = 0.3333$ and $q = t_i/T = 0.6667$. The working time coefficient is $k = p/q = 0.5$. The transmission ratio from the Geneva wheel to the driver is

$$i_{21} = \frac{\omega_2}{\omega_1} = \frac{\lambda(\cos\varphi_1 - \lambda)}{1 - 2\lambda\cos\varphi_1 + \lambda^2}$$

where $\lambda = R/L$, R is radius $\overline{AC}$, L is centre-to-centre distance $\overline{AB}$, φ_1 is the instantaneous angle of rotation of driver *1*, and ω_1 and ω_2 are the angular velocities of driver *1* and Geneva wheel *2*. Driver *1* and Geneva wheel *2* rotate in opposite directions. Owing to the symmetric profile on cam *b*, Geneva wheel *2* can rotate in either direction.

2633	SIX-SLOT GENEVA WHEEL MECHANISM WITH A LOCKING LEVER	PG GW

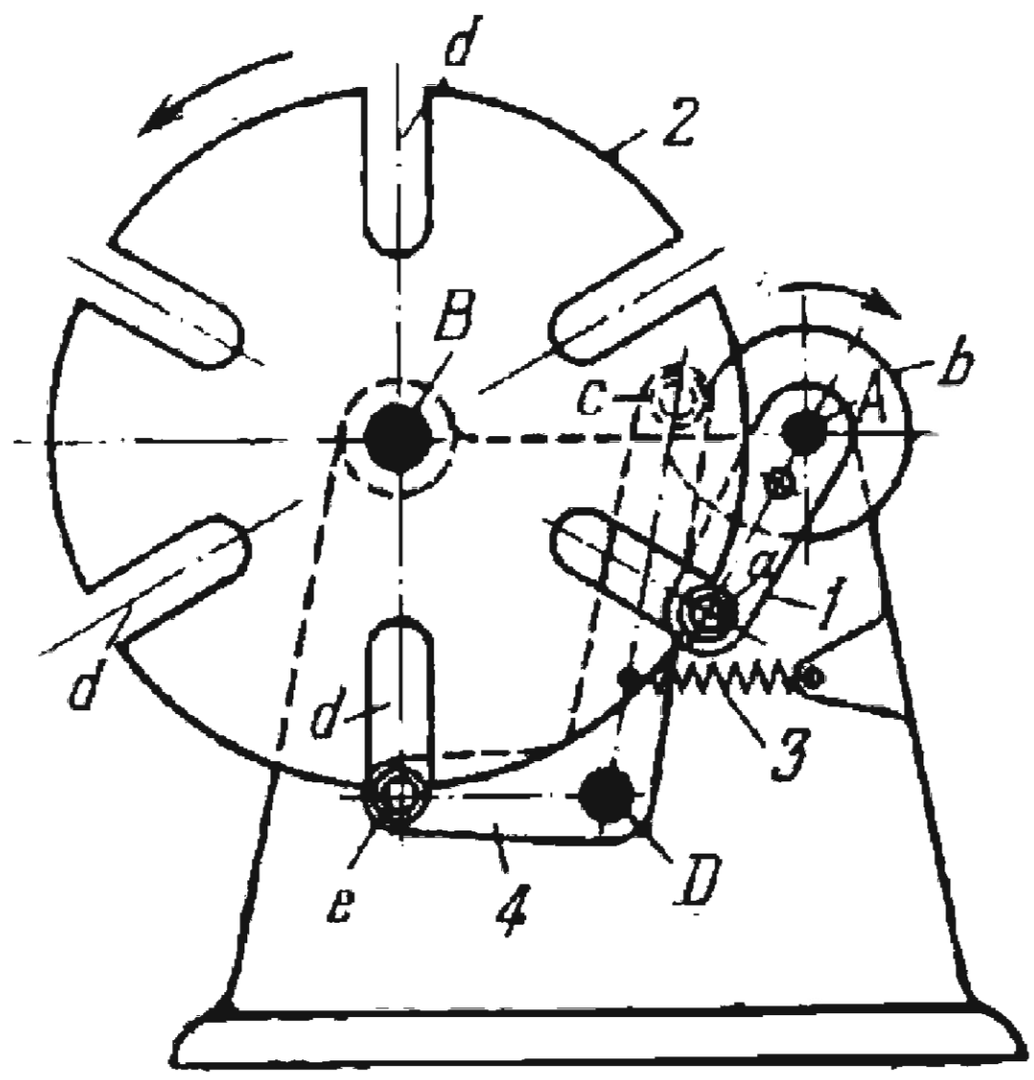

Driver *1* rotates about fixed axis *A* and carries pin *a* which consecutively engages straight radial slots *d* of Geneva wheel *2*. Geneva wheel *2* rotates about fixed axis *B* and its slots *d* are located symmetrically at angles of 60° between the axes of adjacent slots. Driver *1* is rigidly attached to cam *b* which actuates roller *c*, periodically turning two-arm lever *4* about fixed axis *D*. When driver *1* turns clockwise from the position shown, cam *b* turns lever *4* counterclockwise, withdrawing roller *e* from a slot *d* of Geneva wheel *2*. Then driver *1* turns Geneva wheel *2* when its pin *a* engages the next slot *d* of the wheel whose rotation continues until roller *e* enters the following slot *d* and pin *a* of driver *1* turns out of engagement with Geneva wheel *2*. After this, Geneva wheel *2* remains stationary until driver *1* reaches the initial (shown) position again.

2634	TWELVE-SLOT EXTERNAL GENEVA WHEEL MECHANISM	PG GW

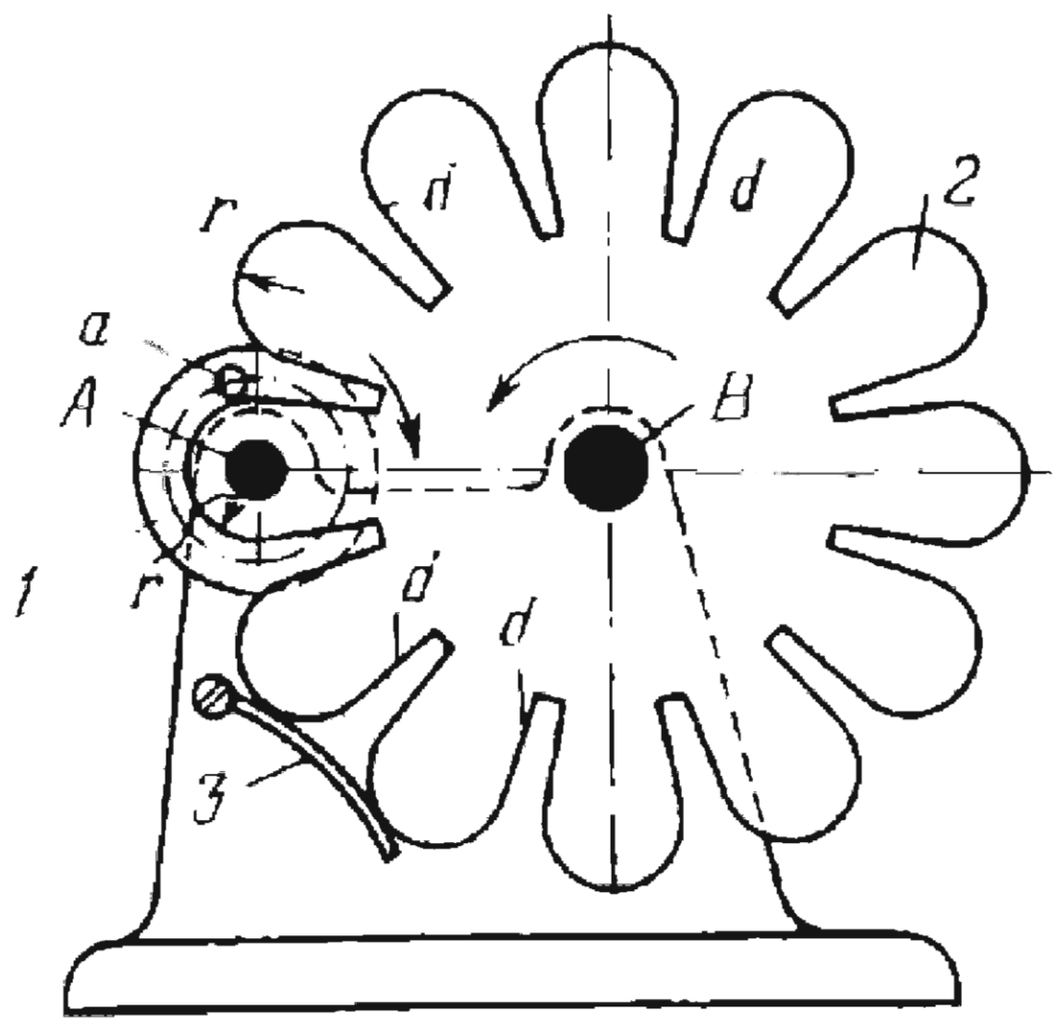

Pin wheel *1* rotates about fixed axis *A* and carries pin *a* which consecutively engages symmetrically located radial slots *d* of Geneva wheel *2*. Geneva wheel *2* rotates about fixed axis *B* and its slots *d* have a profile consisting of straight radial portions connected by semicircles of radius *r* to adjacent slots. Pin *a* engages only one side of slot *d*. The side engaged depends upon the direction of rotation of pin wheel *1*. Flat spring *3* holds pin *a* and Geneva wheel *2* in contact. It also prevents unintentional rotation of Geneva wheel *2* during its idle periods. Slots *d* are located at angles of 30° between the axes of adjacent slots. When pin wheel *1* rotates continuously at uniform velocity, Geneva wheel *2* rotates intermittently at nonuniform velocity with twelve rotation periods t_r and twelve idle periods t_i. The time of one revolution of pin wheel *1* is

$$T = t_r + t_i.$$

The angles of rotation of pin wheel *1* corresponding to an idle and to a rotation period of Geneva wheel *2* are $\varphi_i = 210°$ and $\varphi_r = 150°$. The angle of rotation of Geneva wheel *2* to each revolution of pin wheel *1* is $\varphi_G = 30°$. The rotation and idle factors are $p = t_r/T = 0.4167$ and $q = t_i/T = 0.5833$. The working time coefficient is $k = p/q = 0.71$. Pin wheel *1* and Geneva wheel 2 rotate in opposite directions.

2635	LEVER-DRIVE FOUR-SLOT GENEVA WHEEL MECHANISM	PG GW

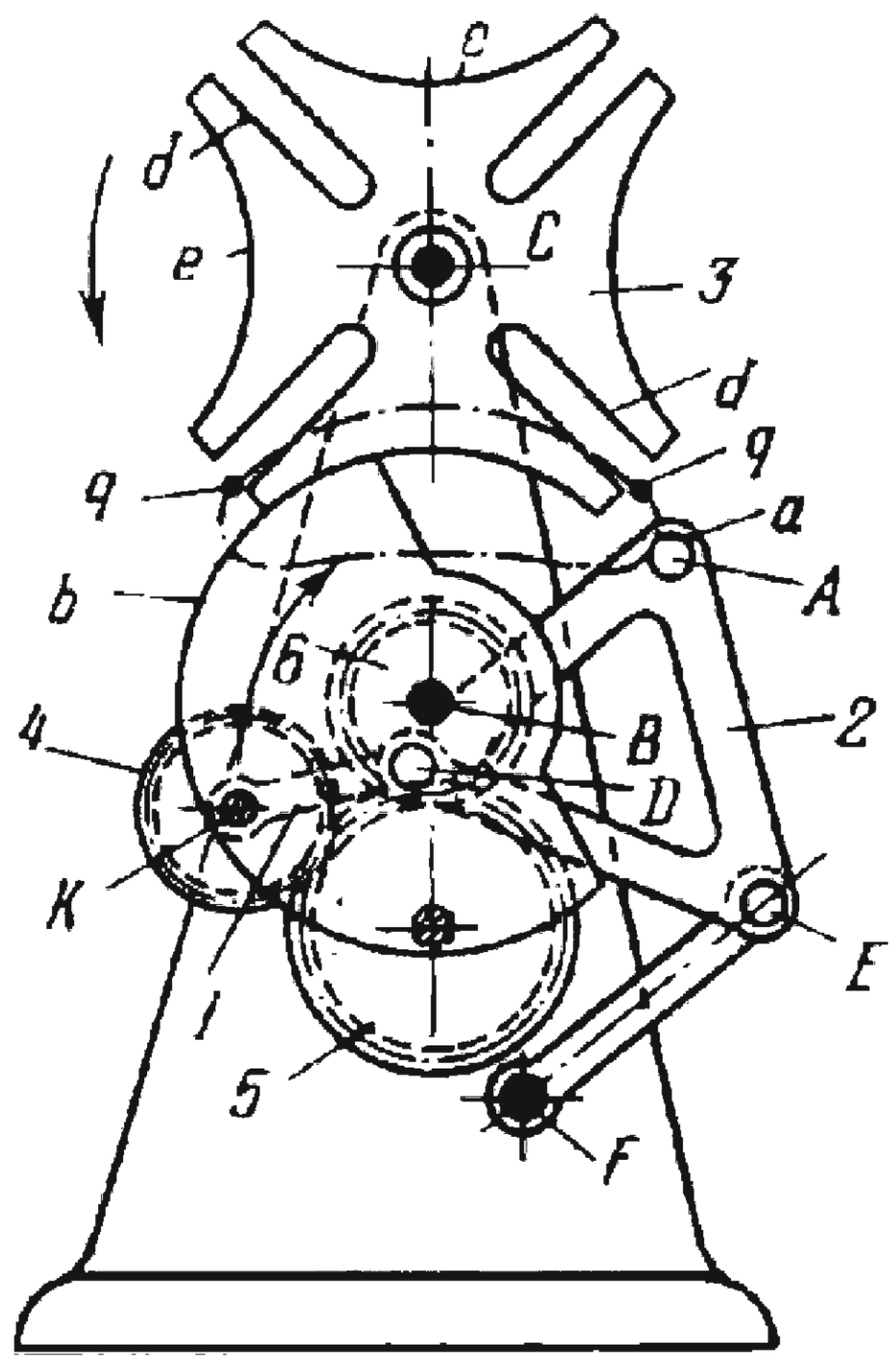

Crank *1* of four-bar linkage *KDEF* rotates about fixed axis *K*. Point *A* of pin *a* on connecting rod *2* describes a connecting-rod curve of which portion *q-q* is used for the entrance of pin *a* into slot *d* and for turning Geneva wheel *3* about fixed axis *C*. Straight radial slots *d* are located symmetrically with angles of 90° between the axes of adjacent slots. Gear *4* is rigidly attached to crank *1* and, through intermediate gear *5*, drives gear *6* which rotates about fixed axis *B* and is rigidly attached to a member having concentric locking surface *b*. Surface *b* engages concave locking surfaces *e* of Geneva wheel *3* to prevent its unintentional rotation during its idle periods. When crank *1* rotates continuously at uniform velocity, Geneva wheel *3* rotates intermittently at nonuniform velocity with four rotation periods t_r and four idle periods t_i. The time of one revolution of crank *1* is

$$T = t_r + t_i.$$

Geneva wheel *3* turns through an angle of 90° to each revolution of crank *1*. By properly selecting the lengths of the links of four-bar linkage *KDEF* a connecting-rod curve can be obtained providing for sufficiently uniform velocity of rotation of Geneva wheel *3* during its rotation periods t_r.

2636	PLANETARY-DRIVE FOUR-SLOT GENEVA WHEEL MECHANISM	PG GW

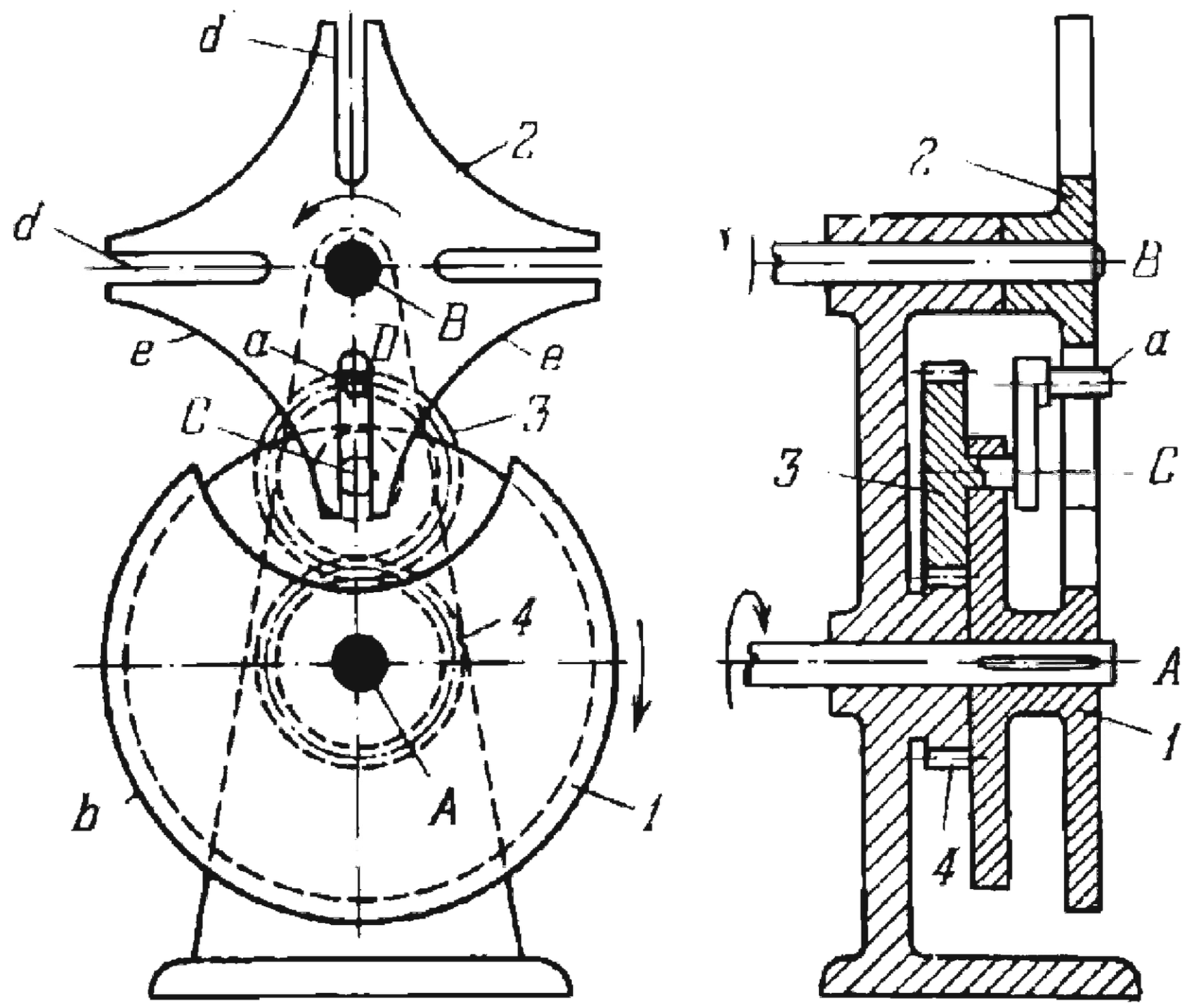

Link *1* rotates about fixed axis *A* and is the carrier of planet gear *3* which meshes with fixed sun gear *4*. Planet gear *3* carries pin *a* which consecutively engages straight radial slots *d* of Geneva wheel *2*. Geneva wheel *2* rotates about fixed axis *B* and its slots *d* are located symmetrically at angles of 90° between the axes of adjacent slots. Carrier *1* has concentric locking surface *b* which engages concave locking surfaces *e* of Geneva wheel *2* to prevent its unintentional rotation during its idle periods. When carrier *1* rotates continuously at uniform velocity, Geneva wheel *2* rotates intermittently at nonuniform velocity with four rotation periods t_r and four idle periods t_i. The time of one revolution of planet gear *3* about axis *A* is

$$T = t_r + t_i.$$

Gears *3* and *4* have equal pitch radii and therefore point *D* of pin *a* describes a cardioid. In the position shown, point *D* is at the point of the cardioid most distant from axis *A*. To each revolution of driving carrier *1*, planet gear *3* rolls around sun gear *4* and pin *a* turns Geneva wheel *2* through 90°. Carrier *1* and Geneva wheel *2* rotate in opposite directions.

2637	LEVER-DRIVE FOUR-SLOT GENEVA WHEEL MECHANISM	PG: GW

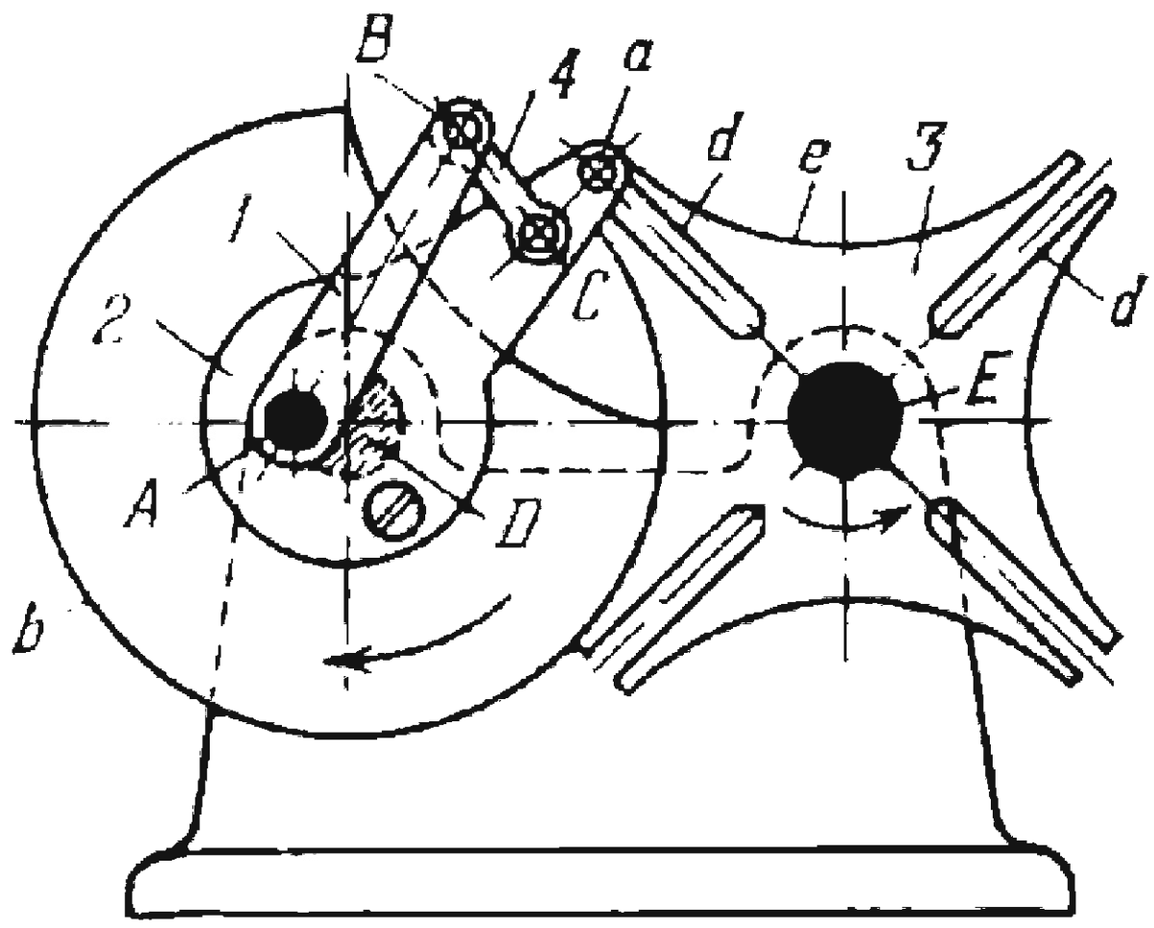

Crank *1* of four-bar drag-link mechanism *ABCD* rotates about fixed axis *A*, imparting rotation to crank *2* about fixed axis *D*. Connecting rod *4* is connected by turning pairs *B* and *C* to cranks *1* and *2*. Crank *2* carries pin *a* which consecutively engages straight radial slots *d* of Geneva wheel *3*. Geneva wheel *3* rotates about fixed axis *E* and its slots *d* are located symmetrically at angles of 90° between the axes of adjacent slots. Rigidly attached to crank *2* is a member having concentric locking surface *b* which engages concave locking surfaces *e* of Geneva wheel *3* to prevent its unintentional rotation during its idle periods. When crank *1* rotates continuously at uniform velocity, Geneva wheel *3* rotates intermittently at nonuniform velocity with four rotation periods t_r and four idle periods t_i. The time of one revolution of crank *1* is

$$T = t_r + t_i.$$

To each revolution of driving crank *1*, crank *2* rotates at nonuniform velocity and turns Geneva wheel *3* through 90°. By properly selecting the lengths of the links of four-bar drag-link mechanism *ABCD*, sufficiently uniform velocity of rotation of Geneva wheel *3* can be obtained during its rotation periods t_r.

2638	QUADRUPLE SIX-SLOT GENEVA WHEEL MECHANISM	PG GW

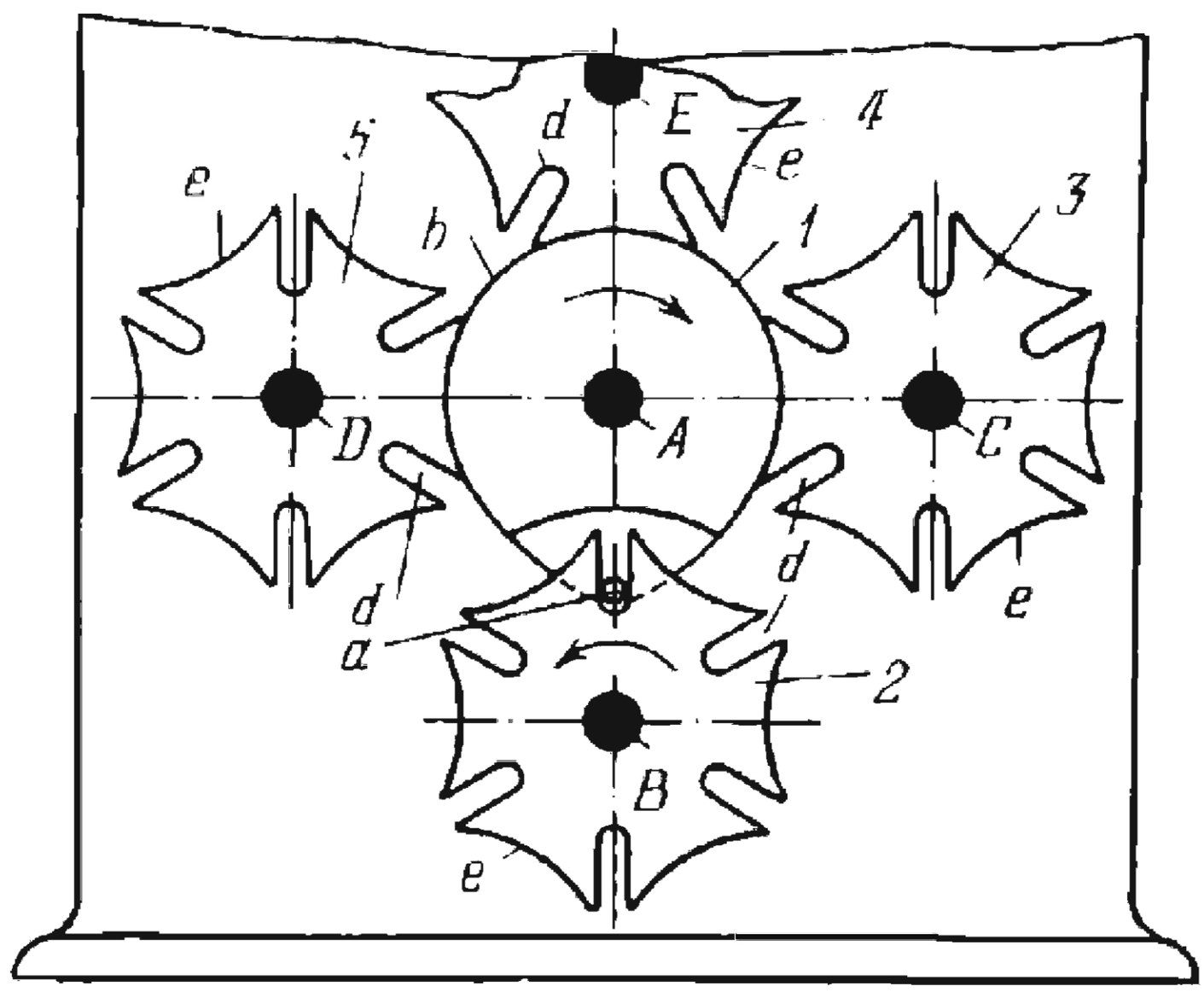

Pin wheel *1* rotates about fixed axis *A* and carries pin *a* which consecutively engages straight radial slots *d* of four identical and symmetrically located Geneva wheels *2*, *3*, *4* and *5*. Geneva wheels *2*, *3*, *4* and *5* rotate about fixed axes *B*, *C*, *E* and *D*, and their slots *d* are located symmetrically at angles of 60° between the axes of adjacent slots. Pin wheel *1* has concentric locking surface *b* which engages concave locking surfaces *e* of the corresponding Geneva wheels to prevent their unintentional rotation during their idle periods. When pin wheel *1* rotates continuously at uniform velocity, each Geneva wheel rotates intermittently at nonuniform velocity with six rotation periods t_r and six idle periods t_i. The time of one revolution of pin wheel *1* for each Geneva wheel is

$$T = t_r + t_i.$$

The angles of rotation of pin wheel *1* corresponding to an idle and to a rotation period of each Geneva wheel are $\varphi_i = 240°$ and $\varphi_r = 120°$. The angle of rotation of each Geneva wheel to each revolution of pin wheel *1* is $\varphi_G = 60°$. The rotation and idle factors for each Geneva wheel are $p = t_r/T = 0.3333$ and $q = t_i/T = 0.6667$. The working time coefficient for each Geneva wheel is $k = p/q = 0.5$. Geneva wheels *2*, *3*, *4* and *5* rotate in the direction opposite to that of pin wheel *1*. During the rotation period of each Geneva wheel, the other three Geneva wheels have idle periods.

2639	LINK-GEAR-DRIVE THREE-SLOT GENEVA WHEEL MECHANISM	PG GW

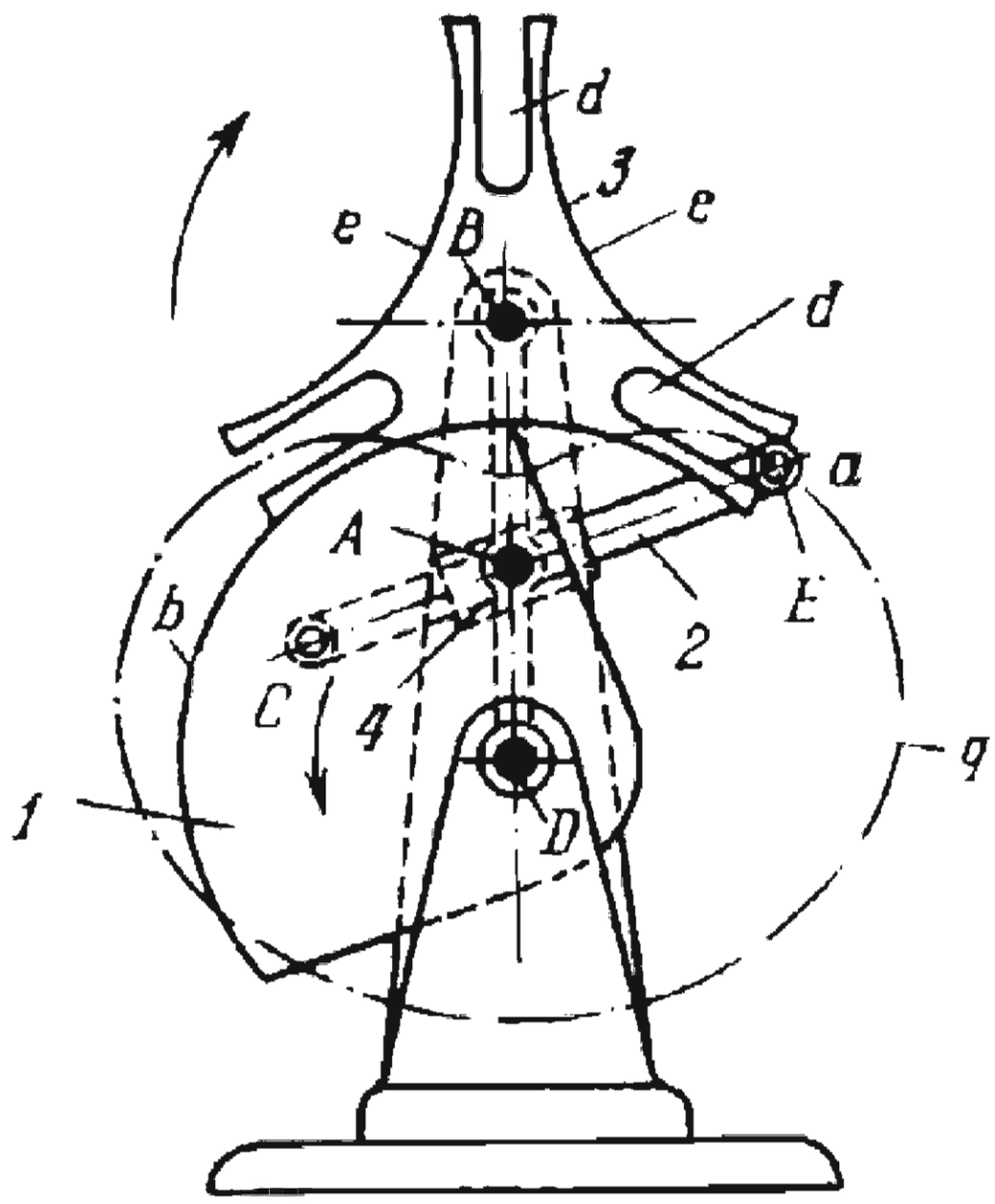

Link *1* rotates about fixed axis *D* and is connected by turning pair *C* to link *2* which moves in slider *4*. Slider *4* turns about fixed axis *A* which is located between axes *D* and *B*. Link *2* carries pin *a* which consecutively engages straight radial slots *d* of Geneva wheel *3*. Geneva wheel *3* rotates about fixed axis *B* and its slots *d* are located symmetrically at angles of 120° between the axes of adjacent slots. Link *1* has concentric locking surface *b* which engages concave locking surfaces *e* of Geneva wheel *3* to prevent its unintentional rotation during its idle periods. The time of one revolution of link *1* is

$$T = t_r + t_i.$$

The angles of rotation of link *1* corresponding to an idle and to a rotation period of Geneva wheel *3* are $\varphi_i = 300°$ and $\varphi_r = 60°$. The angle of rotation of Geneva wheel *3* to each revolution of link *1* is $\varphi_G = 120°$. Point *E* of link *2* describes limacon *q*. Therefore, when link *1* rotates at uniform velocity, Geneva wheel *3* rotates at variable velocity with minimum velocity in the position in which the axis of slot *d* coincides with line *BD*. By changing length $\overline{CE}$ of link *2*, different kinds of motion of Geneva wheel *3* can be obtained. Link *1* and Geneva wheel *3* rotate in opposite directions.

2640	EIGHT-SLOT INVERSE GENEVA WHEEL MECHANISM	PG GW

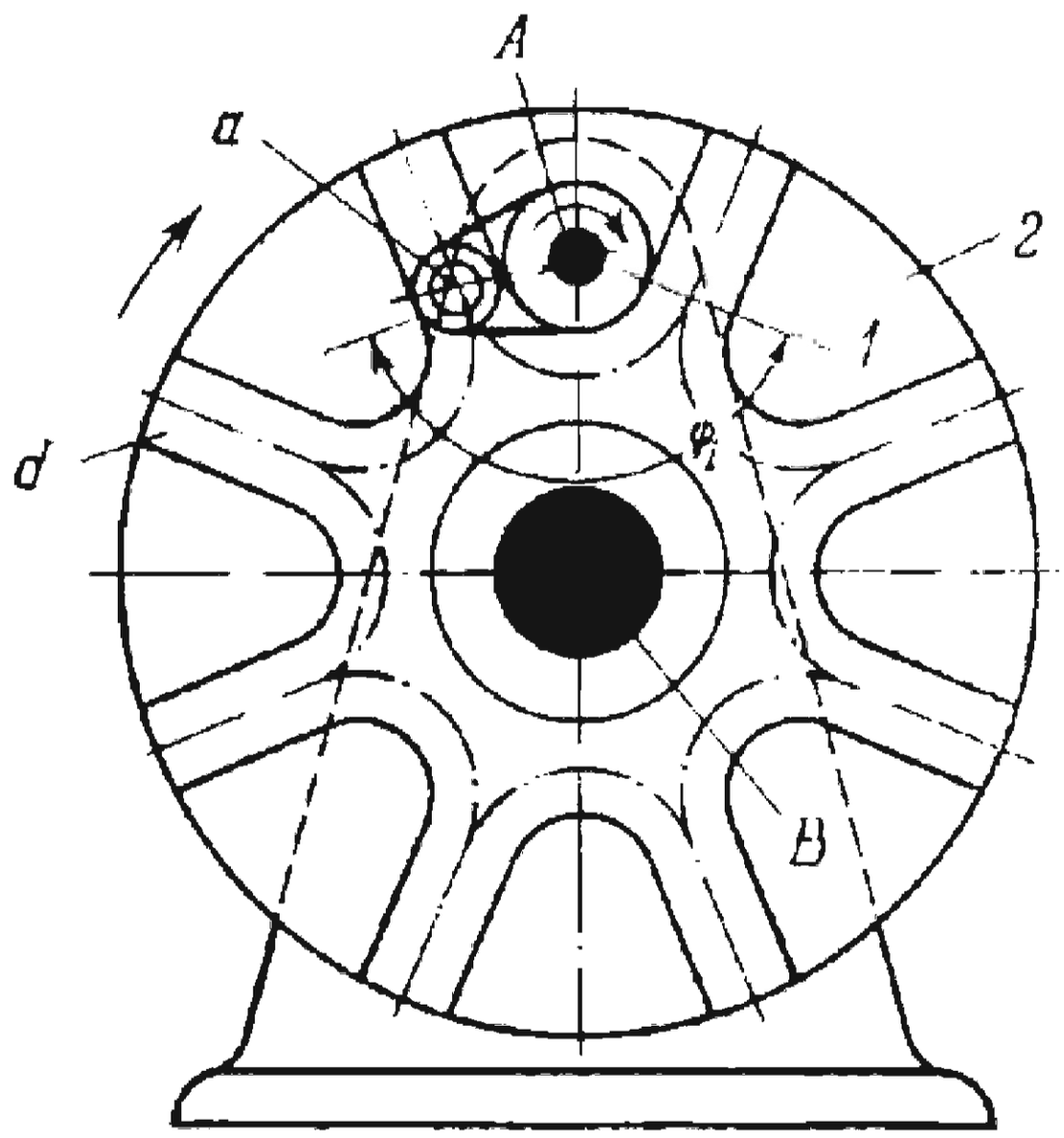

Driver *1* rotates about fixed axis *A* and carries pin *a* which consecutively engages straight radial slots *d* of Geneva wheel (plate) *2*. Geneva wheel *2* rotates about fixed axis *B* and its slots *d* are located symmetrically at angles of 45° between the axes of adjacent slots. When driver *1* rotates continuously at uniform velocity, Geneva wheel *2* rotates intermittently at nonuniform velocity with eight rotation periods t_r and eight idle periods t_i. The time of one revolution of driver *1* is

$$T = t_r + t_i.$$

The angles of rotation of driver *1* corresponding to an idle and to a rotation period of Geneva wheel *2* are $\varphi_i = 135°$ and $\varphi_r = 225°$. The angle of rotation of Geneva wheel *2* to each revolution of driver *1* is $\varphi_G = 45°$. The rotation and idle factors are $p = t_r/T = 0.625$ and $q = t_i/T = 0.375$. The working time coefficient is $k = p/q = 1.67$. Driver *1* and Geneva wheel *2* rotate in the same direction.

2641	THREE-SLOT INVERSE GENEVA WHEEL MECHANISM	PG GW

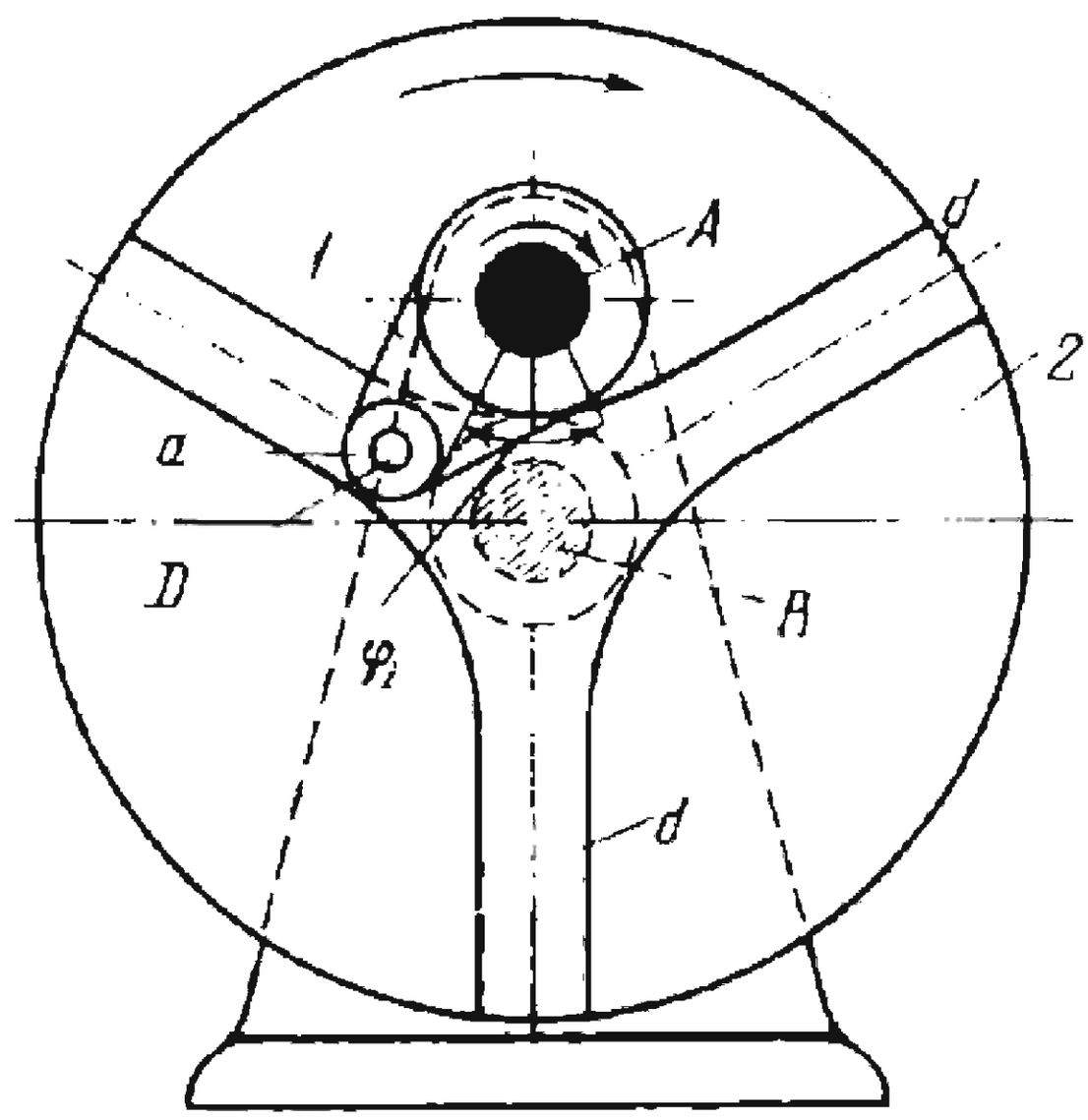

Driver *1* rotates about fixed axis *A* and carries pin *a* which consecutively engages straight radial slots *d* of Geneva wheel (plate) *2*. Geneva wheel *2* rotates about fixed axis *B* and its slots *d* are located symmetrically at angles of 120° between the axes of adjacent slots. When driver *1* rotates continuously at uniform velocity, Geneva wheel *2* rotates intermittently at nonuniform velocity with three rotation periods t_r and three idle periods t_i. The time of one revolution of driver *1* is

$$T = t_r + t_i.$$

The angles of rotation of driver *1* corresponding to an idle and to a rotation period of Geneva wheel *2* are $\varphi_i = 60°$ and $\varphi_r = 300°$. The angle of rotation of Geneva wheel *2* to each revolution of driver *1* is $\varphi_G = 120°$. The rotation and idle factors are $p = t_r/T = 0.8333$ and $q = t_i/T = 0.1667$. The working time coefficient is $k = p/q = 5$. The transmission ratio from the Geneva wheel to the driver is

$$i_{21} = \frac{\omega_2}{\omega_1} = \frac{\lambda(\cos\varphi_1 - \lambda)}{1 - 2\lambda\cos\varphi_1 + \lambda^2}$$

where $\lambda = R/L$, R is radius $\overline{AD}$, L is centre-to-centre distance $\overline{AB}$, φ_1 is the instantaneous angle of rotation of driver *1*, and ω_1 and ω_2 are the angular velocities of driver *1* and Geneva wheel *2*. The maximum value of the transmission ratio is

$$i_{21} = 0.464.$$

Coefficient χ characterizes angular acceleration ε_2 of Geneva wheel *2* at the instants when pin *a* begins and ends engagement with slot *d*, and equals

$$\chi = \frac{\varepsilon_2}{\omega_1^2} = 1.729.$$

Driver *1* and Geneva wheel *2* rotate in the same direction.

2642	TWO-PIN SIX-SLOT EXTERNAL GENEVA WHEEL MECHANISM	PG GW

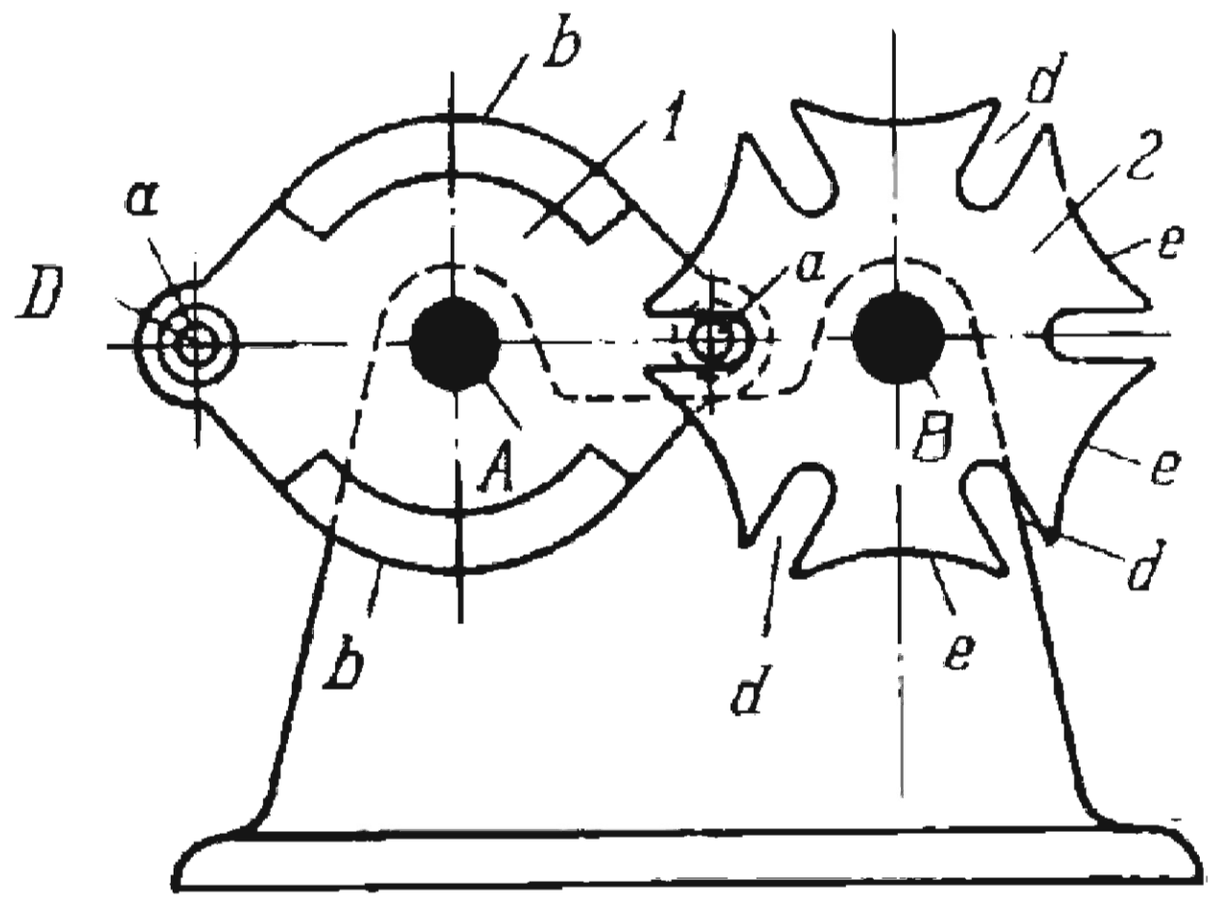

Pin wheel *1* rotates about fixed axis *A* and carries two pins *a* which consecutively engage straight radial slots *d* of Geneva wheel *2*. Geneva wheel *2* rotates about fixed axis *B* and its slots *d* are located symmetrically at angles of 60° between the axes of adjacent slots. Pins *a* are located opposite each other at equal distances from axis *A*. Pin wheel *1* has concentric locking surfaces *b* which engage concave locking surfaces *e* of Geneva wheel *2* to prevent its unintentional rotation during its idle periods. When pin wheel *1* rotates continuously at uniform velocity, Geneva wheel *2* rotates intermittently at nonuniform velocity with six rotation periods t_r and six idle periods t_i. The time of one revolution of pin wheel *1* is

$$T = 2t_r + 2t_i.$$

The angles of rotation of pin wheel *1* corresponding to an idle and a rotation period of Geneva wheel *2* are $\varphi_i = 60°$ and $\varphi_r = 120°$. The angle of rotation of Geneva wheel *2* to one half revolution of pin wheel *1* is $\varphi_G = 60°$. The rotation and idle factors are $p = t_r/T = 0.3333$ and $q = t_i/T = 0.1667$. The working time coefficient is $k = p/q = 2$. The transmission ratio from the Geneva wheel to the driver is

$$i_{21} = \frac{\omega_2}{\omega_1} = \frac{\lambda(\cos\varphi_1 - \lambda)}{1 - 2\lambda\cos\varphi_1 + \lambda^2}$$

where $\lambda = R/L$, R is radius $\overline{AD}$, L is centre-to-centre distance $\overline{AB}$, φ_1 is the instantaneous angle of rotation of pin wheel *1*, and ω_1 and ω_2 are the angular velocities of pin wheel *1* and Geneva wheel *2*. Pin wheel *1* and Geneva wheel *2* rotate in opposite directions.

2643	OVAL-PIN FOUR-SLOT EXTERNAL GENEVA WHEEL MECHANISM	PG GW

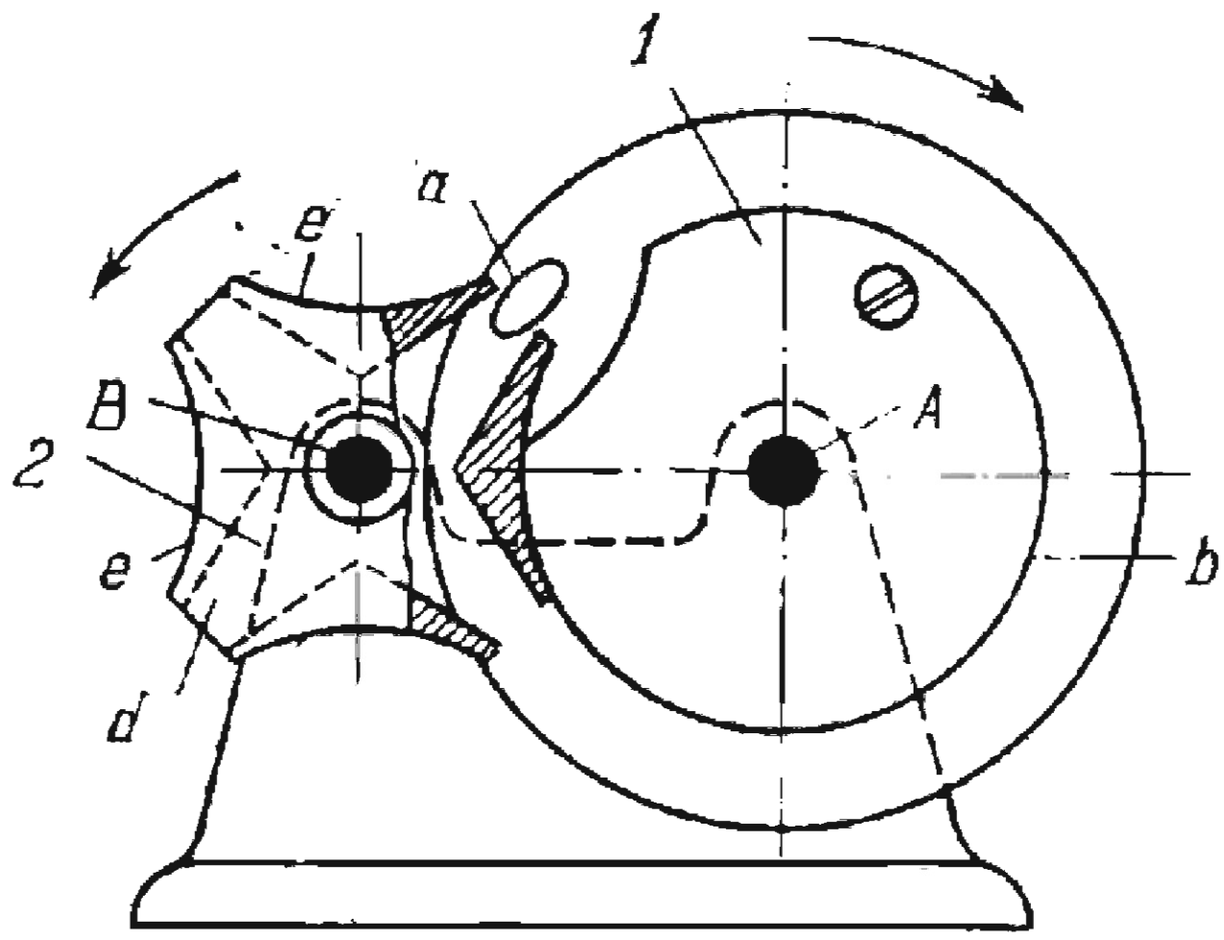

Pin wheel *1* rotates about fixed axis *A* and carries pin *a* of oval cross section which consecutively engages radial slots *d* of Geneva wheel *2*. Geneva wheel *2* rotates about fixed axis *B* and its slots are located symmetrically at angles of 90° between the axes of adjacent slots. The side walls of each slot are not parallel to each other. Pin wheel *1* has concentric locking surface *b* which engages concave locking surfaces *e* of Geneva wheel *2* to prevent its unintentional rotation during its idle periods. When pin wheel *1* rotates continuously at uniform velocity, Geneva wheel *2* rotates intermittently at nonuniform velocity with four rotation periods t_r and four idle periods t_i. The time of one revolution of pin wheel *1* is

$$T = t_r + t_i.$$

Pin *a* contacts one side of slot *d*, turning Geneva wheel *2* through an angle of 90°. At the same time, pin wheel *1* turns through an angle of 60°. The mechanism operates without impact, in the same way as if slots *d* were not radial. Pin wheel *1* and Geneva wheel *2* rotate in opposite directions.

2644	FOUR-SLOT EXTERNAL GENEVA WHEEL MECHANISM WITH A LOCKING SLOT	PG GW

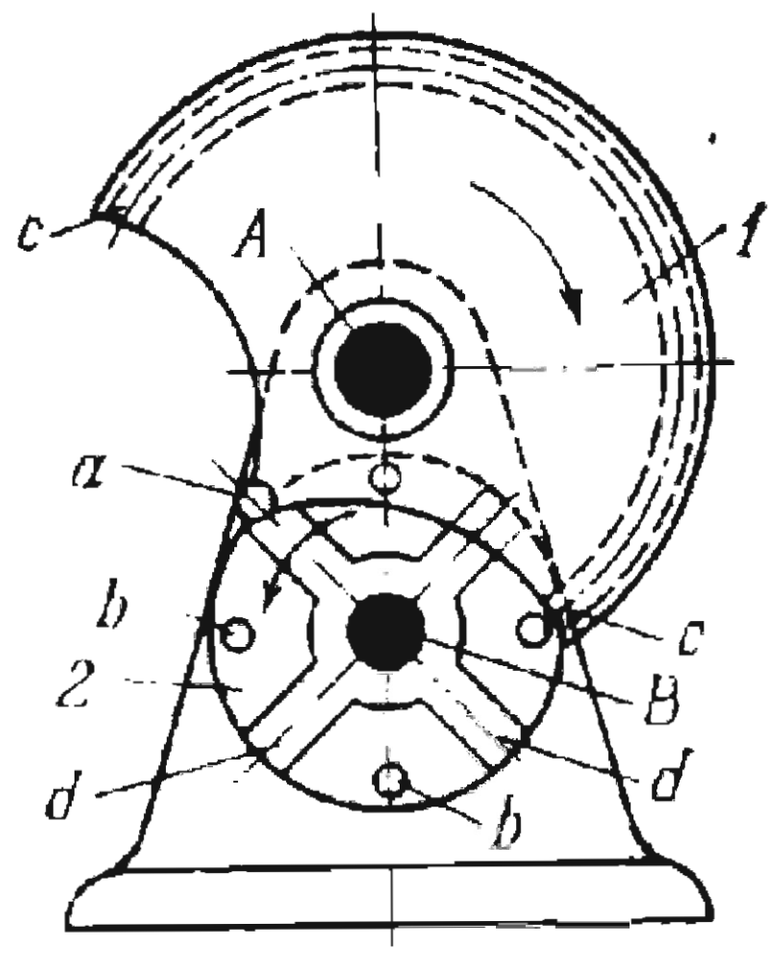

Pin wheel *1* rotates about fixed axis *A* and carries pin *a* which consecutively engages straight radial slots *d* of Geneva wheel *2*. Geneva wheel *2* rotates about fixed axis *B* and its slots are located symmetrically at angles of 90° between the axes of adjacent slots. Pin wheel *1* has annular locking slot *c* which engages two oppositely located pins *b* on Geneva wheel *2* to prevent its unintentional rotation during its idle periods. Pins *b* are located at equal distances from axis *B* and symmetrically with respect to slots *d*. When pin wheel *1* rotates continuously at uniform velocity, Geneva wheel *2* rotates intermittently at nonuniform velocity with four rotation periods and four idle periods. The angle of rotation of Geneva wheel *2* to each revolution of pin wheel *1* is $\varphi_G = 90°$. Pin wheel *1* and Geneva wheel *2* rotate in opposite directions.

2645	TWO-PIN FOUR-SLOT EXTERNAL GENEVA WHEEL MECHANISM	PG GW

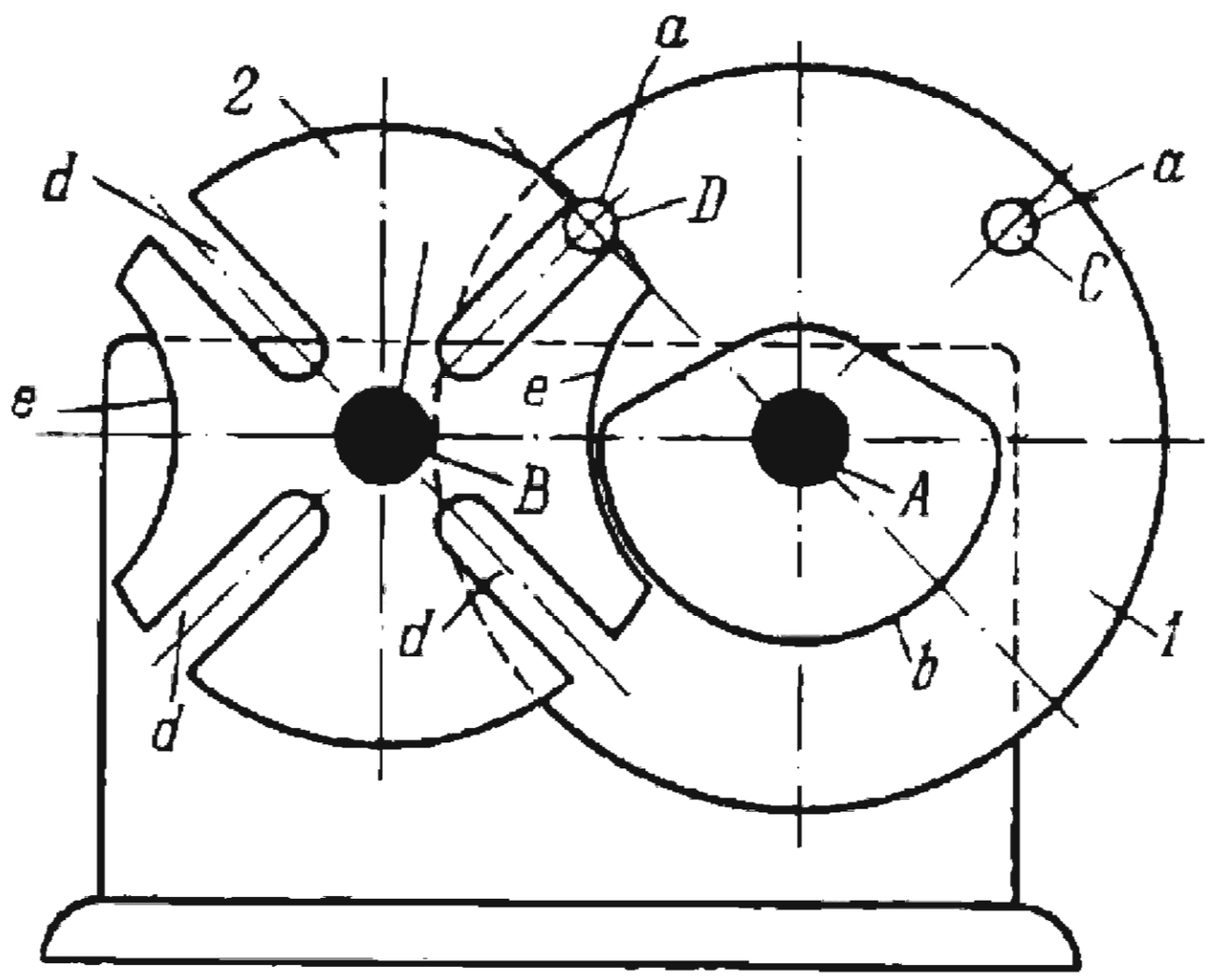

Pin wheel *1* rotates about fixed axis *A* and carries two pins *a* which consecutively engage straight radial slots *d* of Geneva wheel *2*. Geneva wheel *2* rotates about fixed axis *B* and its slots are located symmetrically at angles of 90° between the axes of adjacent slots. Pins *a* are located at equal distances from axis *A* and lines *AC* and *AD* make an angle of 90°. Pin wheel *1* has concentric locking surface *b* which engages the corresponding concave locking surface *e* of Geneva wheel *2* to prevent its unintentional rotation during its idle periods. When pin wheel *1* rotates continuously at uniform velocity, Geneva wheel *2* rotates intermittently at nonuniform velocity. Geneva wheel *2* makes one revolution to two revolutions of pin wheel *1* and has two rotation periods and two idle periods.

2646	COMBINED GENEVA WHEEL AND INTERMITTENT GEAR MECHANISM WITH PERIODS OF UNIFORM ROTATION	PG GW

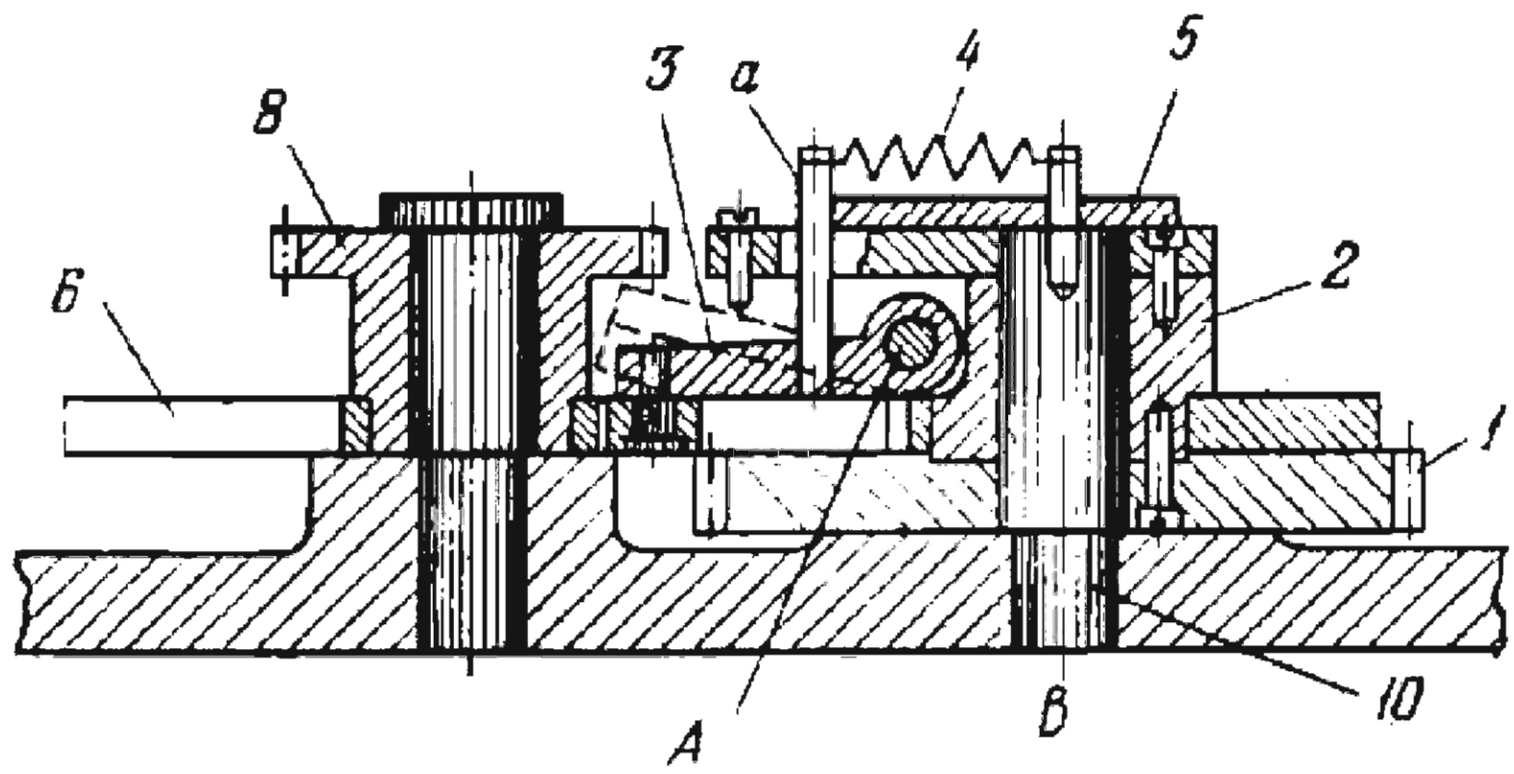

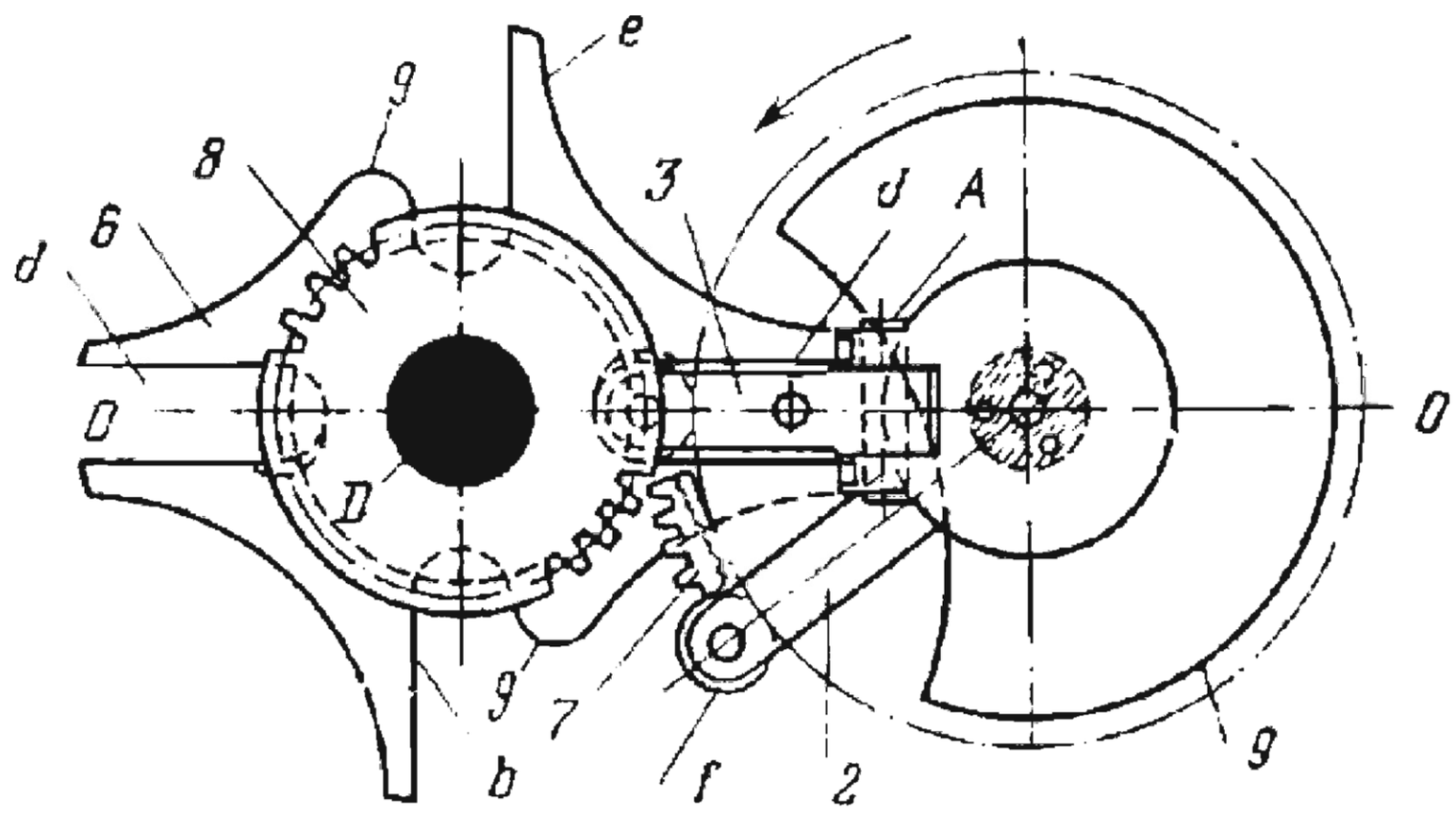

Gear *1* is free y mounted on fixed stud *10* and is driven at uniform velocity about fixed axis *B* of stud *10*. First driving arm *2* is rigidly attached to (or integral with) gear *1*, while second arm *3* is pivoted to gear *1* and is held in its raised position (shown by the dash lines) by spring *4* attached to pin *a* of arm *3*. Spring-loaded pin *a* slides around fixed cam *5* (not shown in the top view). Geneva wheel (spider) *6* rotates about fixed axis *D* and has two slots *d* and two slots *b*, symmetrically located. When pin *f* of arm *2* engages a slot *b* of Geneva wheel *6* it imparts acceleration to the wheel until arm *2* reaches centre line *BD*. At this point gear segment *7* meshes with its mating segment *8* which is rigidly attached to Geneva wheel *6*. This rotates the latter at uniform velocity. The rear wall of slot *b* is shortened and rounded off at *g* so that pin *f* cannot interfere with the uniform motion imparted by the gears. At the instant the gear segments *7* and *8* pass out of engagement, arm *3* is turned about axis *A* into engagement with a slot *d* of Geneva wheel *6*. This is accomplished by cam *5* whose lobe actuates pin *a* of arm *3*. This instant is the one shown. Upon further rotation of arm *3* it decelerates Geneva wheel *6* to a stop. At this point arm *3* passes out of engagement with slot *d* of Geneva wheel *6* and the concentric outside locking surface of link *9*, rigidly attached to gear *1*, engages a concave locking surface *e* of Geneva wheel *6* to prevent its unintentional rotation during its idle periods.

2647	COMBINED GENEVA WHEEL AND SEGMENT GEAR MECHANISM FOR INTERMITTENT TABLE ROTATION	PG GW

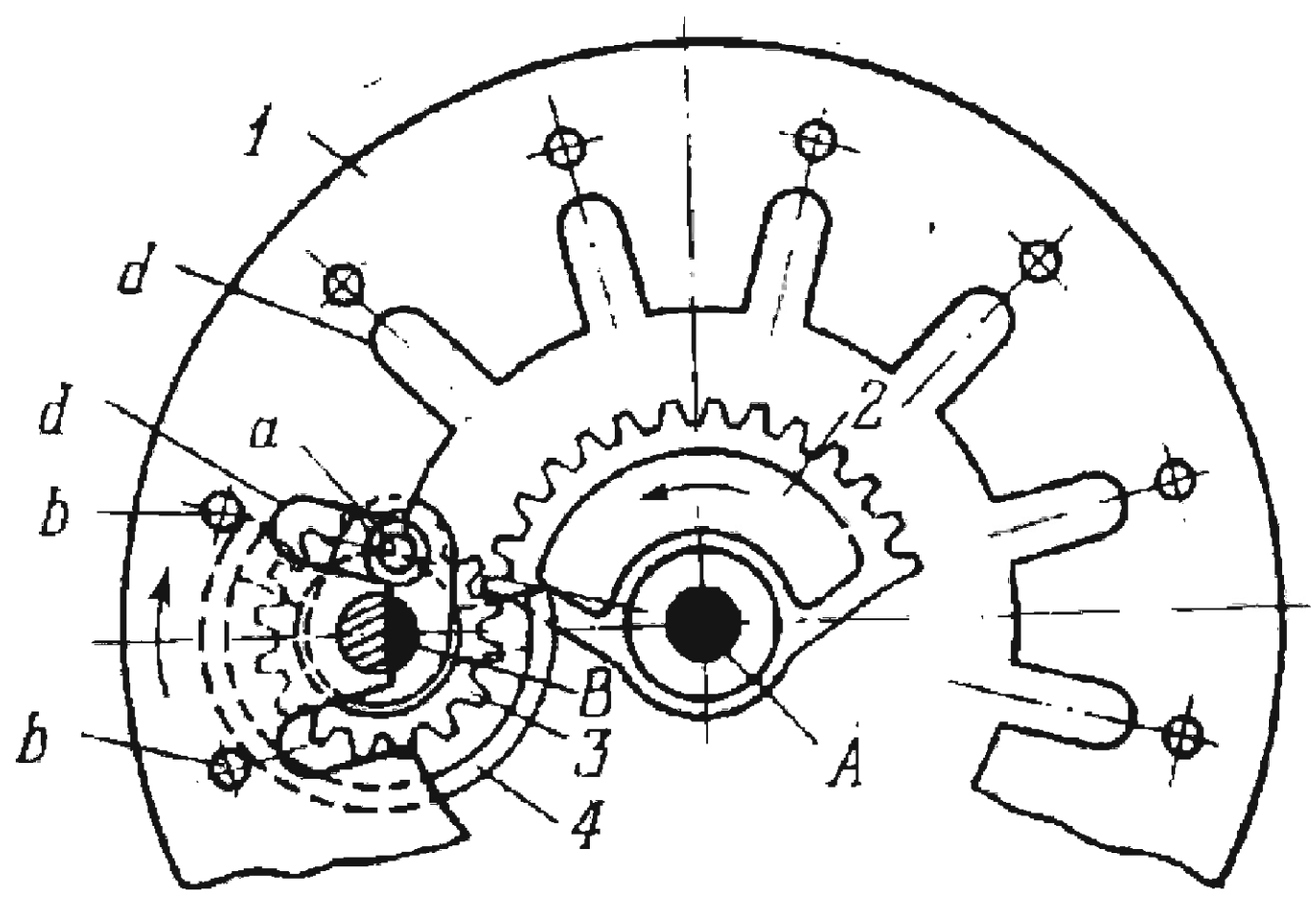

Segment gear *2* rotates about fixed axis *A* and meshes with pinion *3* which rotates about fixed axis *B*. Segment gear *2* and pinion *3* have the same number of teeth so that pinion *3* makes one revolution to each revolution of segment gear *2*. Pin *a* of pinion *3* consecutively engages straight, radial, symmetrically located slots *d* of table *1* which rotates about axis *A*. To each revolution of segment gear *2* (and pinion *3*), table *1* turns through an angle equal to that between the axes of adjacent slots *d*. Table *1* is locked during its idle periods against unintentional rotation by concentric member *4* which engages two pins *b* of the table. Pinion *3* and table *1* rotate in the same direction.

2648	FIVE-SLOT GENEVA WHEEL MECHANISM WITH A REVERSIBLE DRIVEN GEAR	PG GW

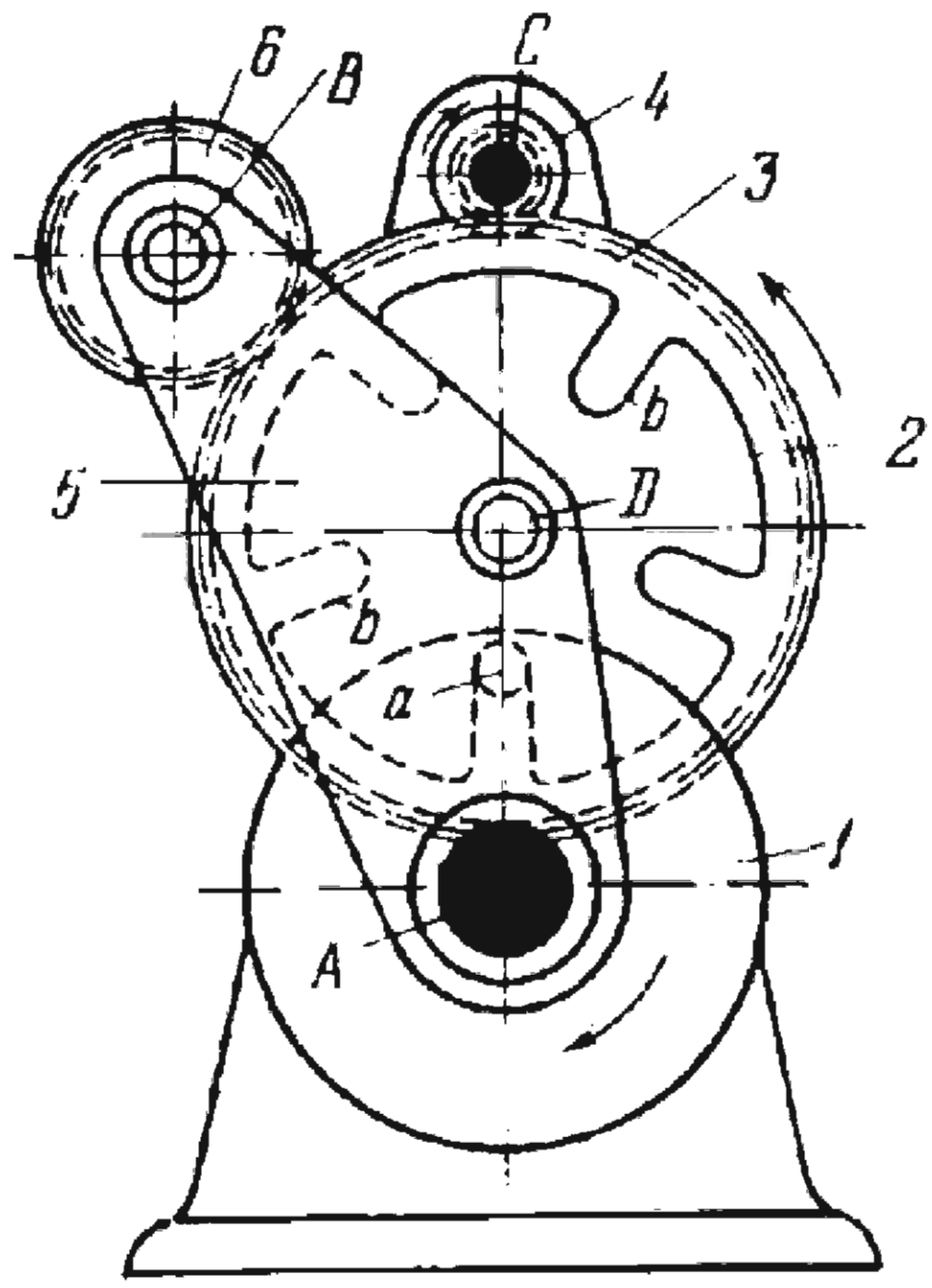

Pin wheel *1* rotates about fixed axis *A* and carries pin *a* which consecutively engages straight radial slots *b* of Geneva wheel *2*. Geneva wheel *2* rotates about axis *D* of arm *5* and its five slots *b* are symmetrically located. Geneva wheel *2* turns 1/5 revolution to each revolution of pin wheel *1*. Geneva wheel *2* is rigidly attached to gear *3* which meshes with gear *4* and transmits intermittent rotation to it about fixed axis *C*. Gear *3* also meshes with gear *6* which rotates about axis *B* of arm *5*. Gear *4* can be reversed by turning arm *5* about axis *A* so that gear *3* is taken out of engagement with gear *4* and gear *6* is brought into engagement with gear *4*.

2649	FOUR-SLOT EXTERNAL GENEVA WHEEL MECHANISM WITH A LOCKING SLOT	PG GW

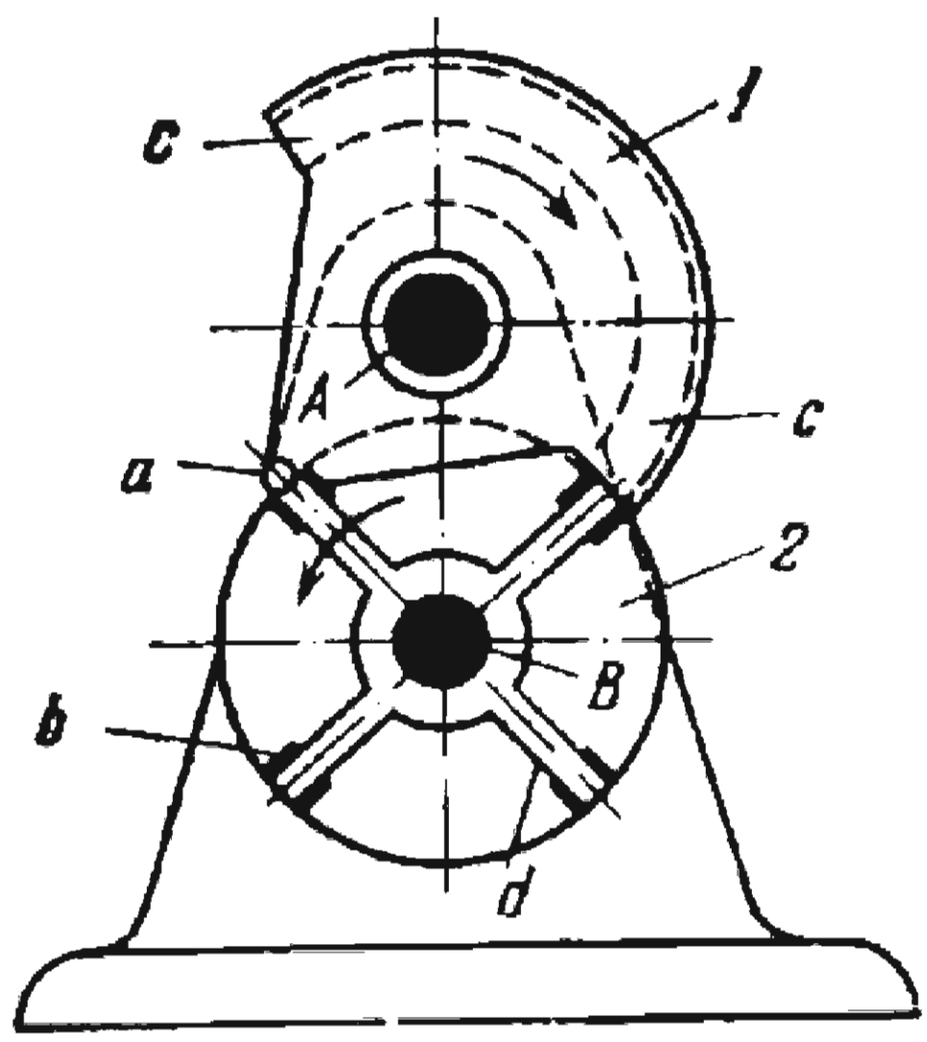

Pin wheel *1* rotates about fixed axis *A* and carries pin *a* which consecutively engages straight radial slots *d* of Geneva wheel *2*. Geneva wheel *2* rotates about fixed axis *B* and its slots *d* are located symmetrically at angles of 90° between the axes of adjacent slots. Pin wheel *1* has annular locking slot *c* which engages two adjacent pairs of lugs *b* on Geneva wheel *2* to prevent its unintentional rotation during its idle periods. When pin wheel *1* rotates continuously at uniform velocity, Geneva wheel *2* rotates intermittently at nonuniform velocity with four rotation periods and four idle periods. The angle of rotation of Geneva wheel *2* to each revolution of pin wheel *1* is $\varphi_G = 90°$. Pin wheel *1* and Geneva wheel *2* rotate in opposite directions.

2650	FOUR-SLOT SPHERICAL GENEVA WHEEL MECHANISM	PG GW

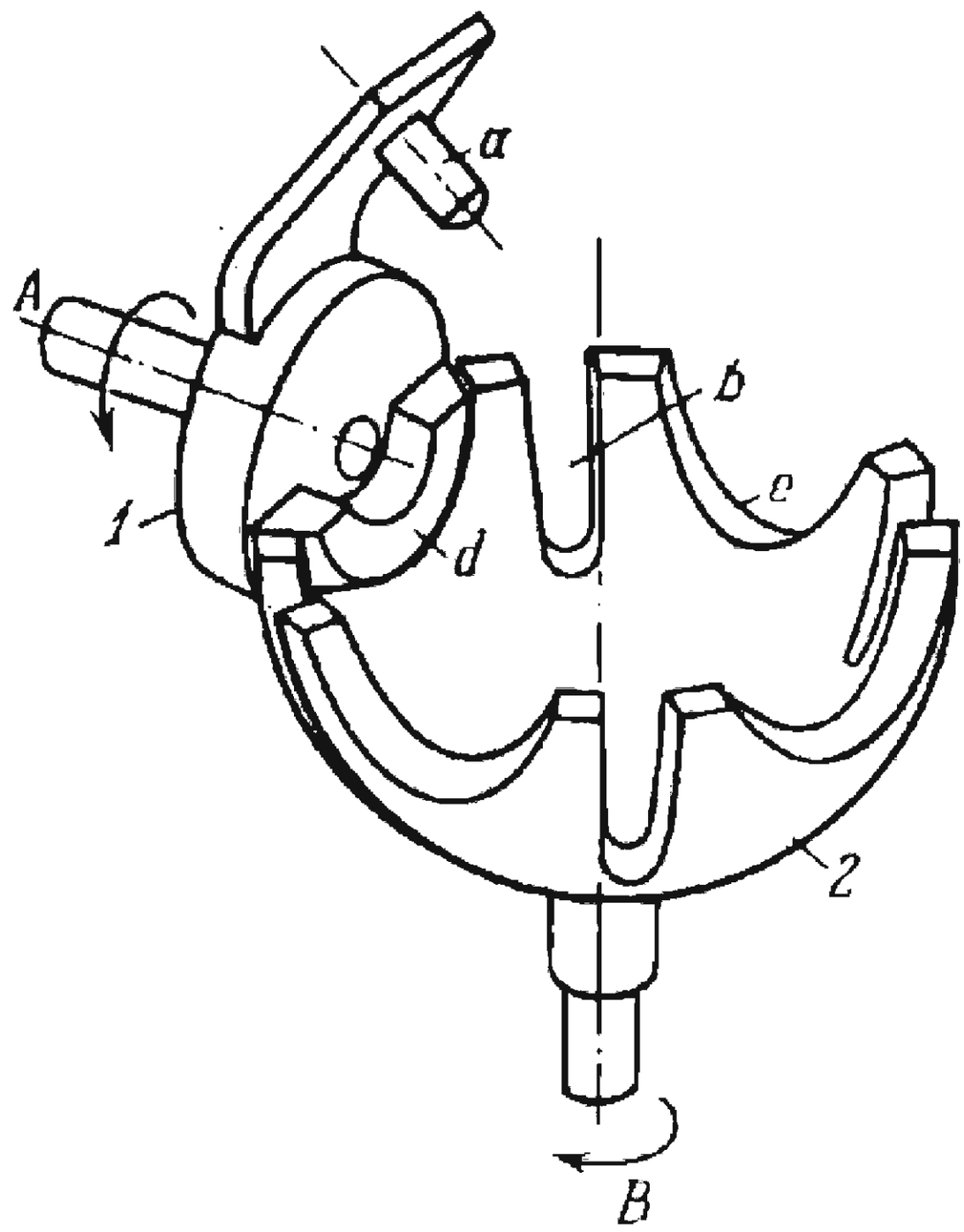

Driver *1* rotates about fixed axis *A* and carries pin *a* which consecutively engages slots *b* in spherical Geneva wheel *2*. Geneva wheel *2* rotates about fixed axis *B* and its slots *b* are located symmetrically at angles of 90° between adjacent slots. Driver *1* has concentric member *d* which engages concave surfaces *e* of Geneva wheel *2* to prevent its unintentional rotation during its idle periods. When driver *1* rotates continuously at uniform velocity, Geneva wheel *2* rotates intermittently at nonuniform velocity.

2651	TEN-SLOT SPATIAL GENEVA WHEEL MECHANISM	PG GW

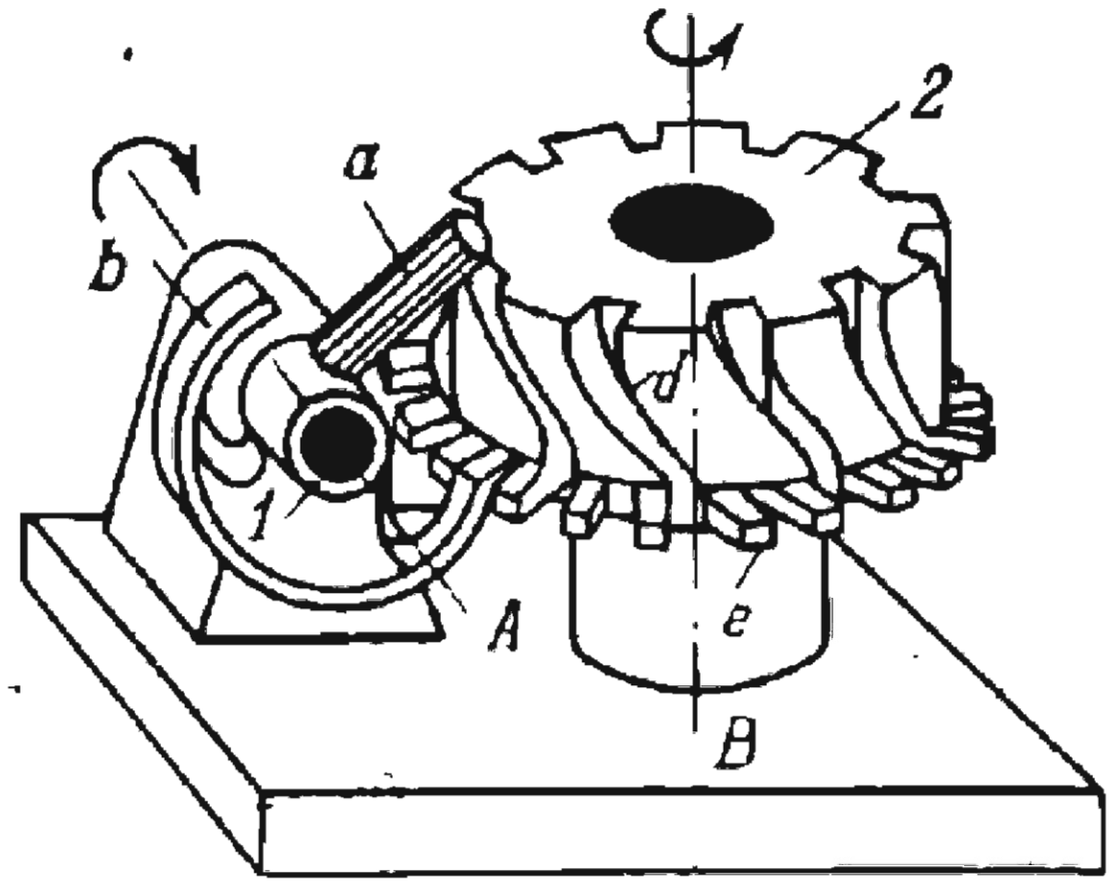

Driver *1* rotates about fixed axis *A* and carries pin *a* which consecutively engages slots *d* of Geneva wheel *2*. Geneva wheel *2* rotates about fixed axis *B* and its slots *d* are helical and located symmetrically at angles of 36° between the axes of adjacent slots. Driver *1* carries concentric locking member *b* which engages the spaces between fingers *e* on Geneva wheel *2* to prevent its unintentional rotation during its idle periods. Axes *A* and *B* do not intersect and are perpendicular to each other. When driver *1* rotates continuously at uniform velocity, Geneva wheel 2 rotates intermittently at nonuniform velocity with ten rotation periods t_r and ten idle periods t_i. The time of one revolution of driver *1* is

$$T = t_r + t_i.$$

The angle of rotation of Geneva wheel *2* to each revolution of driver *1* is $\varphi_G = 36°$.

2652	PIN-WHEEL SPATIAL INTERMITTENT ROTATION MECHANISM	PG GW

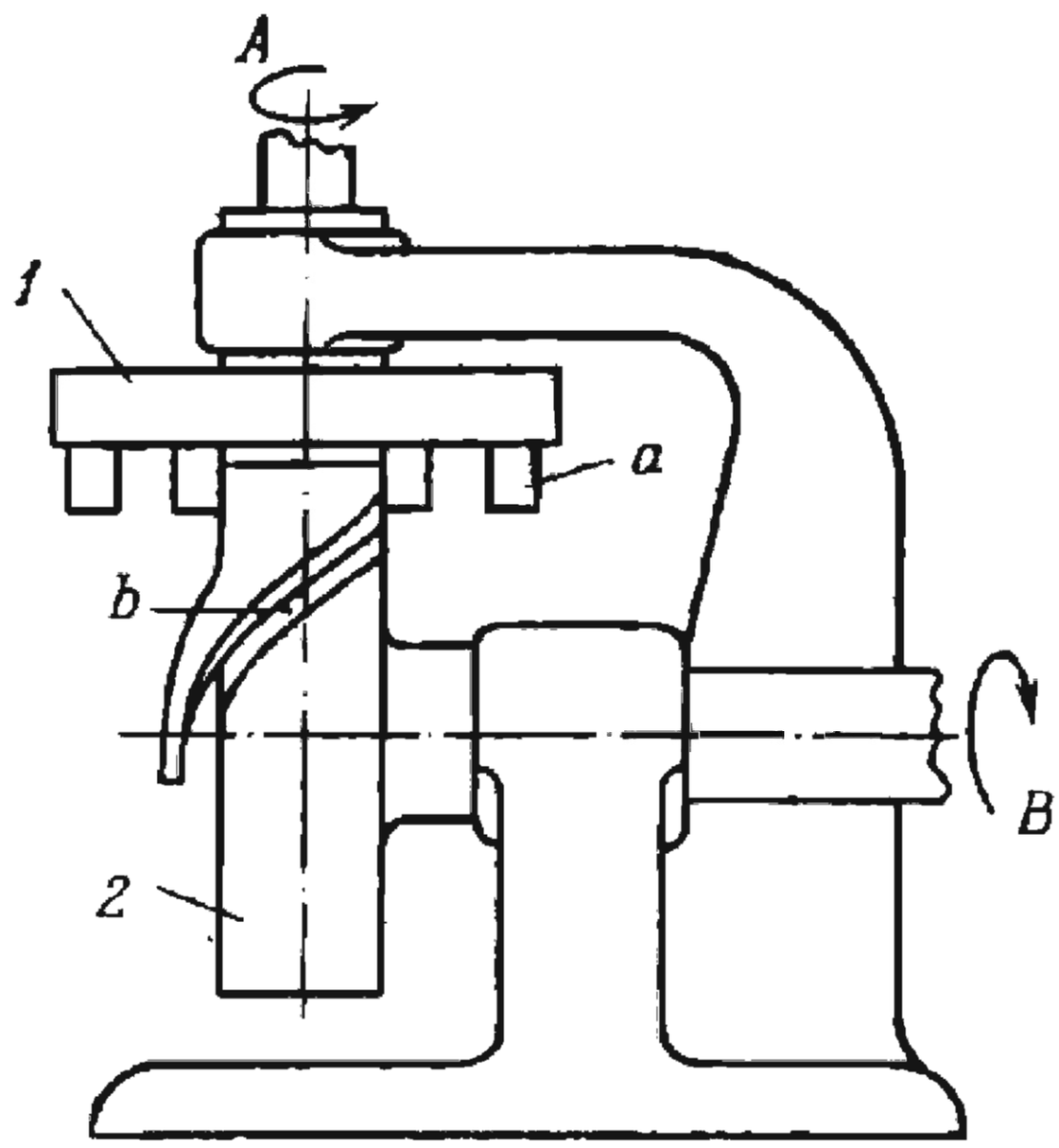

Pin wheel *1* rotates about fixed axis *A* and carries pins *a* which consecutively engage helical slot *b* of link *2*. Link *2* rotates about fixed axis *B* which crosses axis *A*. When link *2* rotates continuously, pin wheel *1* rotates intermittently with dwells. The law by which the angular velocity of link *1* varies depends upon the shape of helical slot *b*.

2653	INTERMITTENT GEARING FEEDING MECHANISM	PG SF

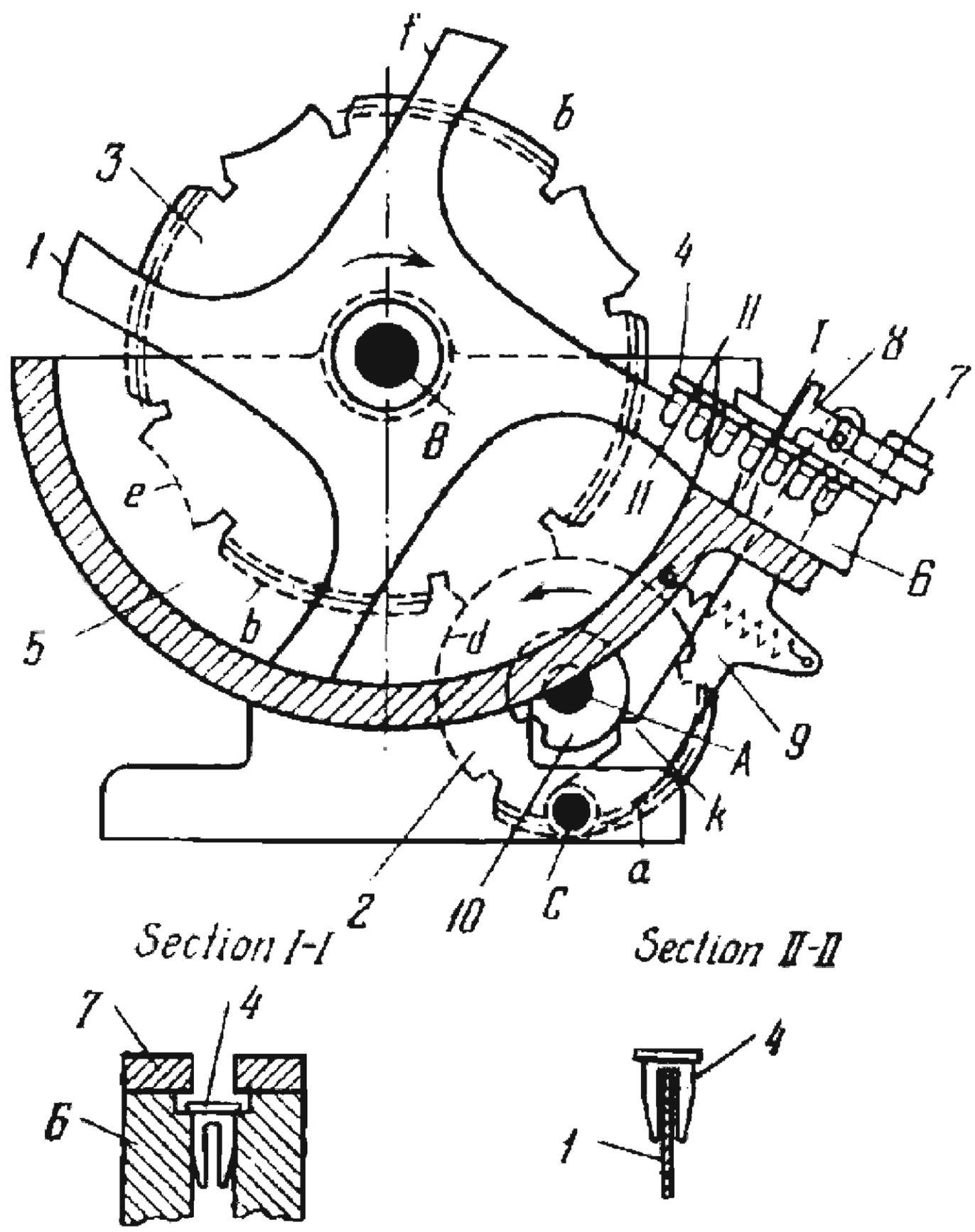

Link *2* rotates about fixed axis *A* and its gear segment *a* meshes intermittently with gear segments *b* of gear *3* which rotates about fixed axis *B*. Link *2* has concentric locking surface *d* which engages the corresponding concave locking surface *e* of gear *3* to prevent its unintentional rotation during its idle periods. Gear *3* turns through an angle of 90° to each revolution of link *2*. Four-bladed member *1* is rigidly attached to gear *3*. As member *1* rotates clockwise, some of the parts to be fed (split rivets *4* in the version shown), placed in hopper *5*, straddle blades *f*, as shown in cross section *II-II*. As member *1* continues to turn, split rivets *4* slide along the curved edge of blade *f* until they reach the position shown at the tip of the blade. Each blade *f* dwells in this position to enable the rivets to slide off and into chute *6*. In chute *6* the rivets are supported under their heads (see cross section *I-I*) and strips *7* are provided to prevent them from piling up in the inclined chute. Sliding finger *8* keeps the top of chute *6* clear of incorrectly delivered rivets *4*. Finger *8* is actuated by lever *9* which turns about fixed axis *C* and has lug *k*. Lug *k* is actuated by cam *10* which is rigidly attached to link *2*. A spring pulls lever *9* toward the hopper while the motion in the other direction is from cam *10*.

2654	GENEVA WHEEL WORK FEEDING MECHANISM	PG SF

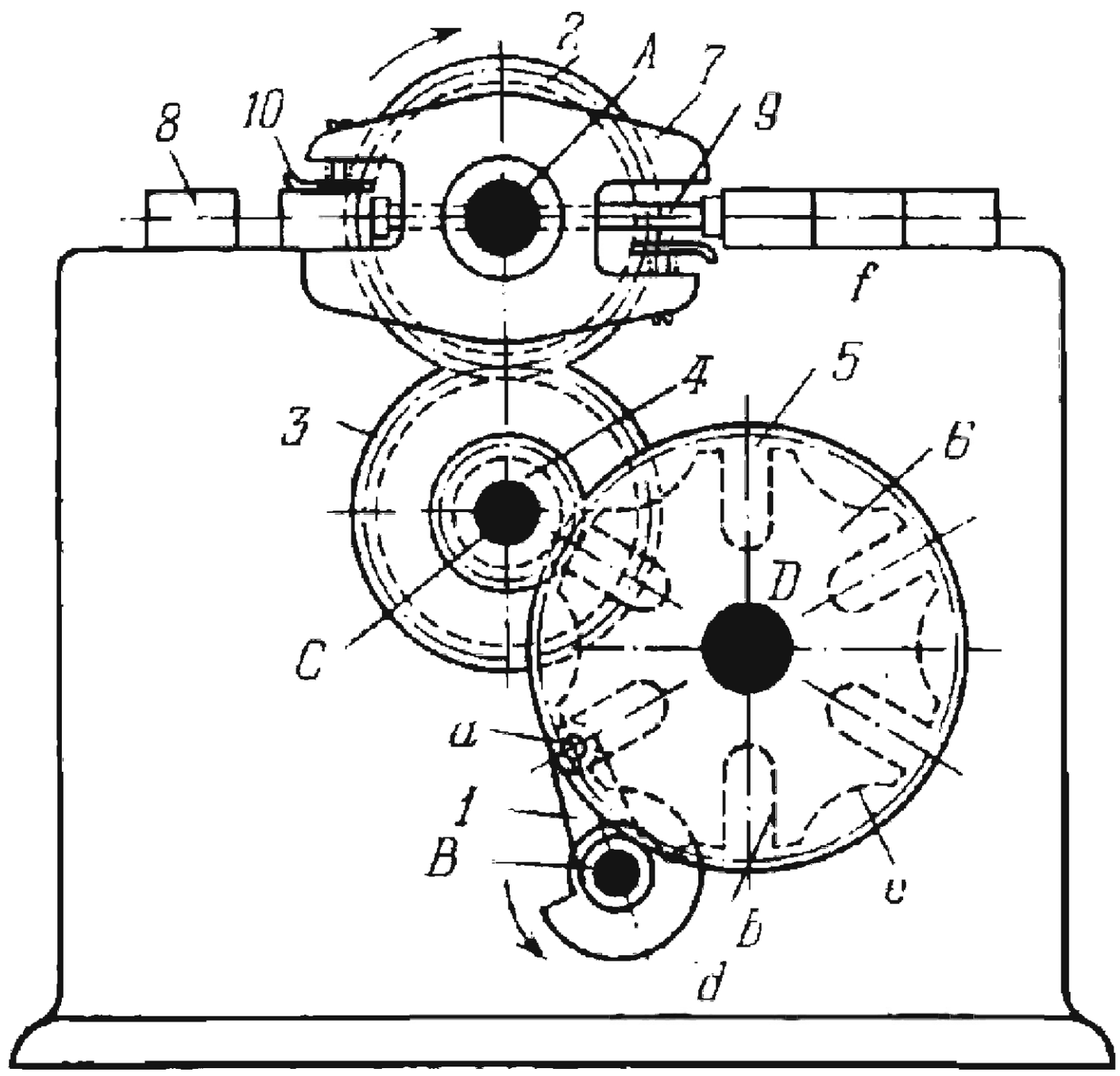

Driver *1* rotates about fixed axis *B* and carries pin *a* which consecutively engages straight radial slots *b* of Geneva wheel *6*. Geneva wheel *6* rotates about fixed axis *D* and its slots *b* are located symmetrically at angles of 60° between the axes of adjacent slots. Driver *1* has concentric locking surface *d* which engages the corresponding concave locking surface *e* of Geneva wheel *6* to prevent its unintentional rotation during its idle periods. When driver *1* rotates continuously, Geneva wheel *6* rotates intermittently with six rotation and six idle periods, turning through an angle of 60° to each revolution of driver *1*. Gear *5* is rigidly attached to Geneva wheel *6* and meshes with gear *4* which rotates about fixed axis *C*. Gear *3* is rigidly attached to gear *4* and meshes with gear *2* which rotates about fixed axis *A*. The transmission ratios from gear *2* to gear *3* and from gear *4* to gear *5* are $i_{23} = -1$ and $i_{45} = -3$. To each revolution of driver *1*, gear *2* turns through 180°. Rigidly attached to gear *2* is gripping and reversing member *7*. During an idle period a workpiece *8* is pushed into member *7* where it is held by spring-loaded plate *10*. In the subsequent rotation period, workpiece *8* is carried from the left- to the right-hand position, being reversed in this motion. In the following idle period, a new workpiece *8* is pushed from the left into member *7* where it contacts plunger *9*, pushing it to the right so that the plunger pushes the preceding workpiece *8* out of member *7* and onto conveyer *f*.

2655	PIN-WHEEL SPATIAL GEARING OF A FLOUR MILL	PG FD

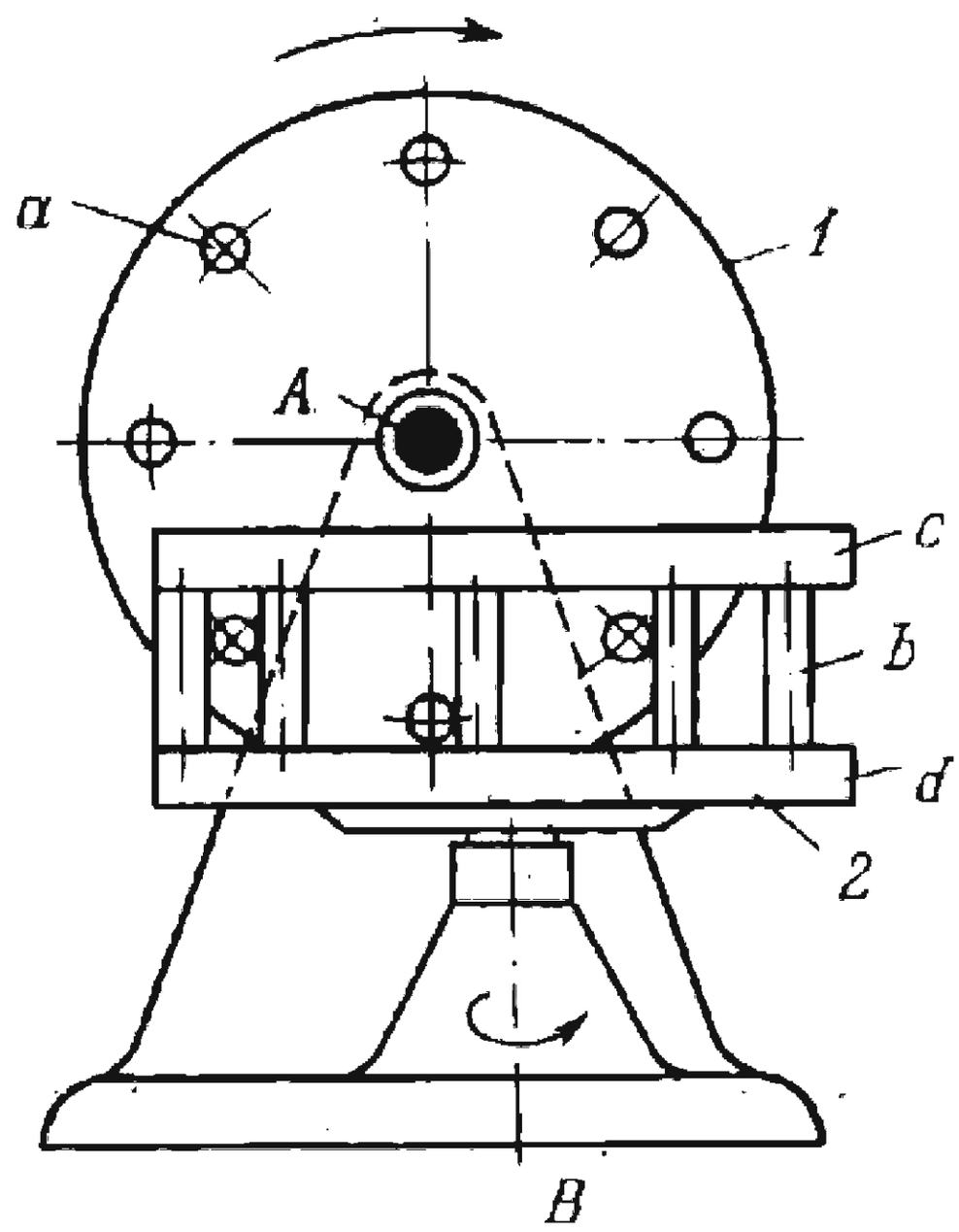

Pin wheel *1* rotates about fixed axis *A* and carries pins *a* which engage pins *b* of lantern wheel *2*. Lantern wheel *2* rotates about fixed axis *B* and consists of two disks *c* and *d*, connected together by round pins *b*. The gearing transmits rotation between nonintersecting axes which are perpendicular to each other.

2656	PIN-WHEEL FIXTURE FOR CUTTING SPROCKETS	PG FD

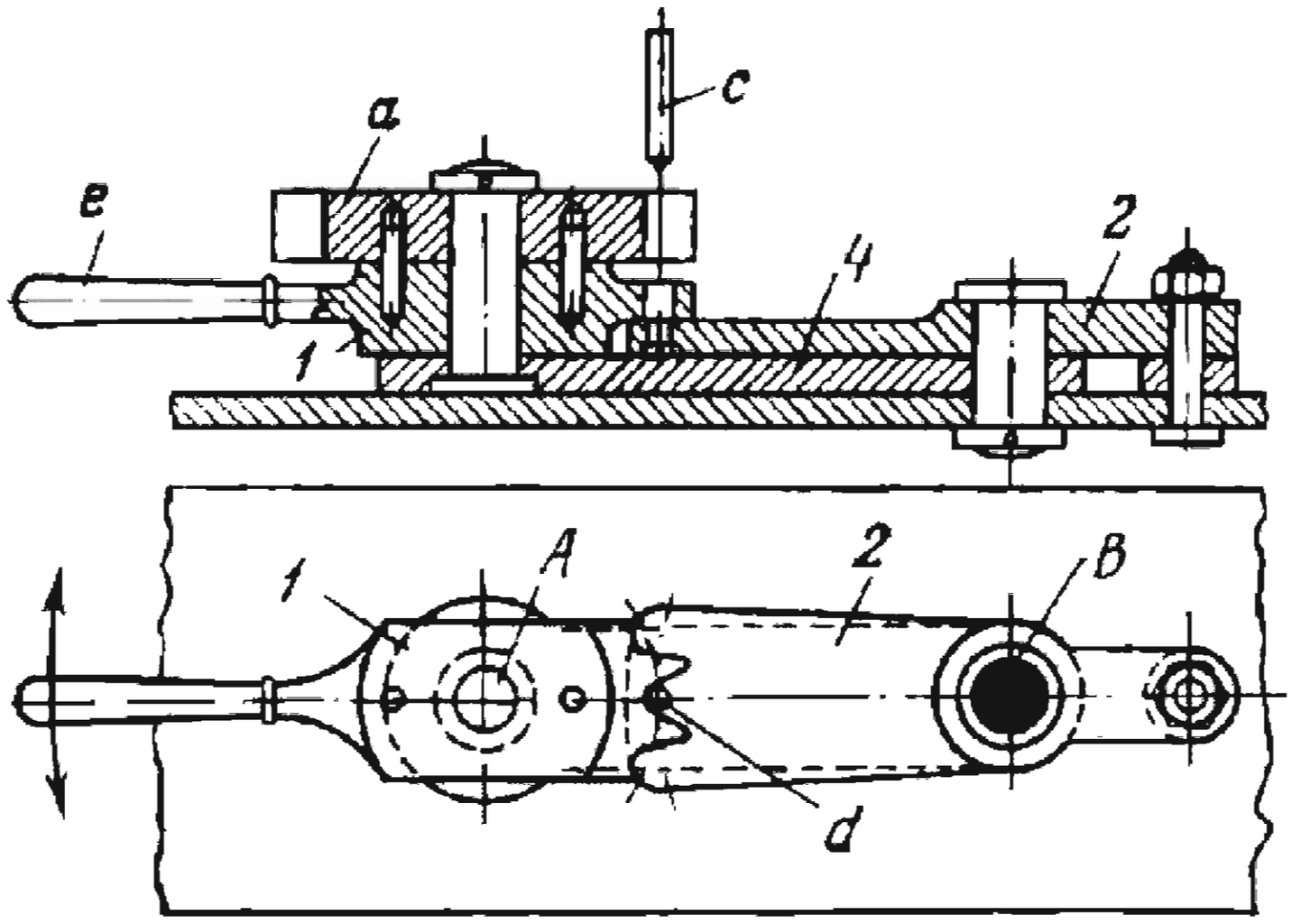

Sprocket blank *a* is clamped coaxially on link *1* which is a segment with teeth exactly like those to be cut on the sprocket blank. Link *2* is clamped rigidly on the milling machine table, and carries pin *d* which engages the teeth of sprocket segment *1*. Link *1* with sprocket blank *a* turns about axis *A* of link *4* which, in turn, turns about fixed axis *B*. The axis of end mill *c* coincides with that of pin *d*. When handle *e* is turned first in one direction and then in the other, link *1* rolls about pin *d* of link *2* and end mill *c* mills the required tooth space profile on sprocket blank *a*. Then blank *a* is indexed on link *1* by a device (not shown) and the next tooth space is milled, etc.

2657	PIN-WHEEL MECHANISM FOR FEEDING THE WARP FROM THE WARP BEAM TO THE HARNESS	PG FD

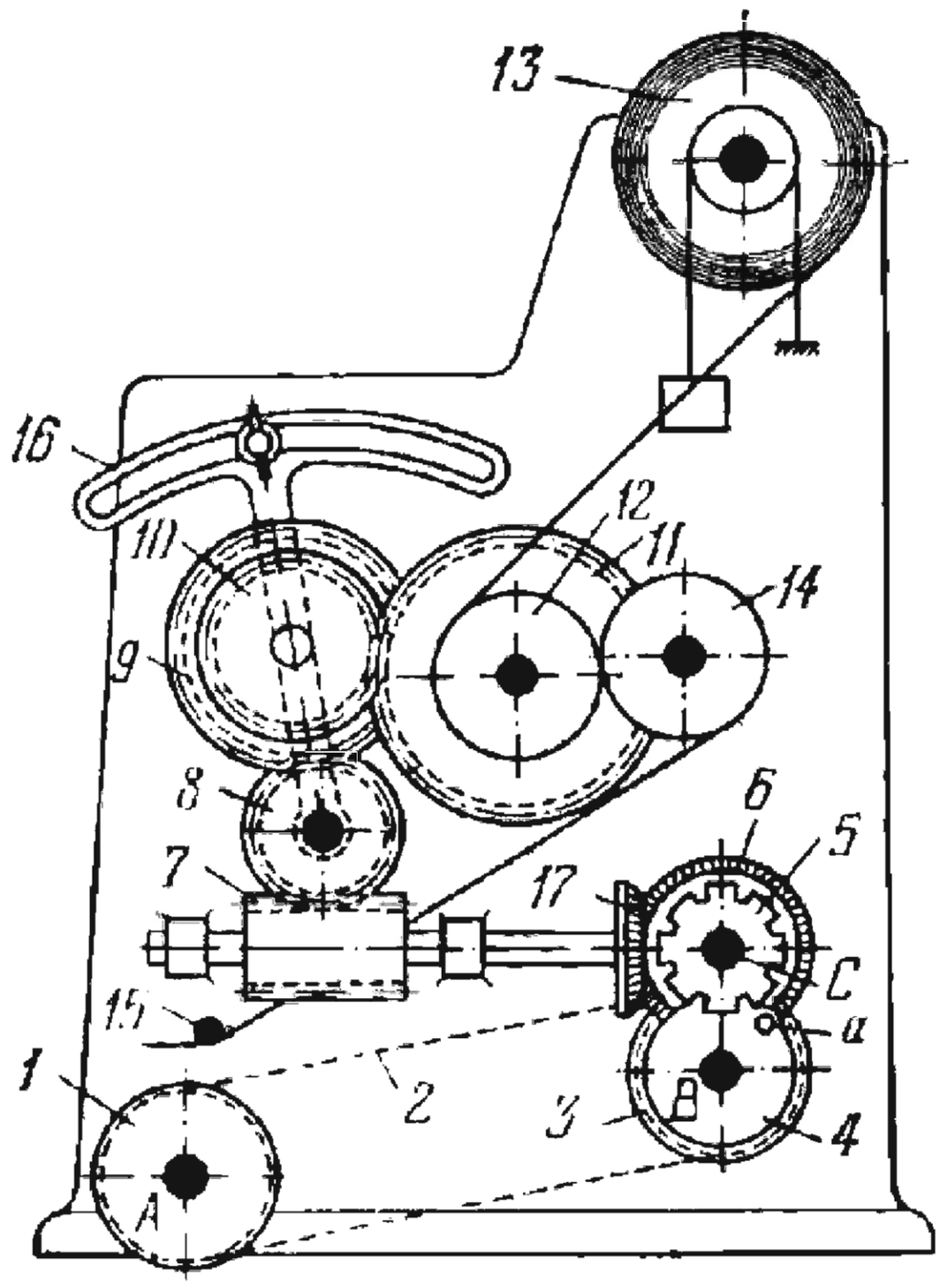

Chain sprocket *1* rotates about a fixed axis and is keyed on main shaft *A*. Rotation is transmitted from sprocket *1* through chain *2* to sprocket *3* which rotates about a fixed axis and is keyed, together with pin wheel *4*, on shaft *B*. Pin wheel *4* carries pin *a* which consecutively engages the slots of Geneva wheel *5*. Geneva wheel *5* rotates intermittently about a fixed axis and is keyed, together with bevel gear *6*, on shaft *C*. This intermittent rotation is transmitted through bevel gear *17*, meshing with gear *6*, worm *7*, worm wheel *8* and gears *9*, *10* and *11*, to feed roller *12*, rigidly attached to gear *11*. When roller *12* rotates, the warp is unwound from warp beam *13* with a small tension produced by the rope brake. The warp runs over roller *12*, auxiliary roller *14* and member *15* to the harness (not shown). The rate of feed is varied by changing gear *10*. The stud on which gears *9* and *10* are keyed is carried by quadrant *16* which can be swung when required about the axis of gear *8* so that the new gear *10* (after changing) engages gear *11*.

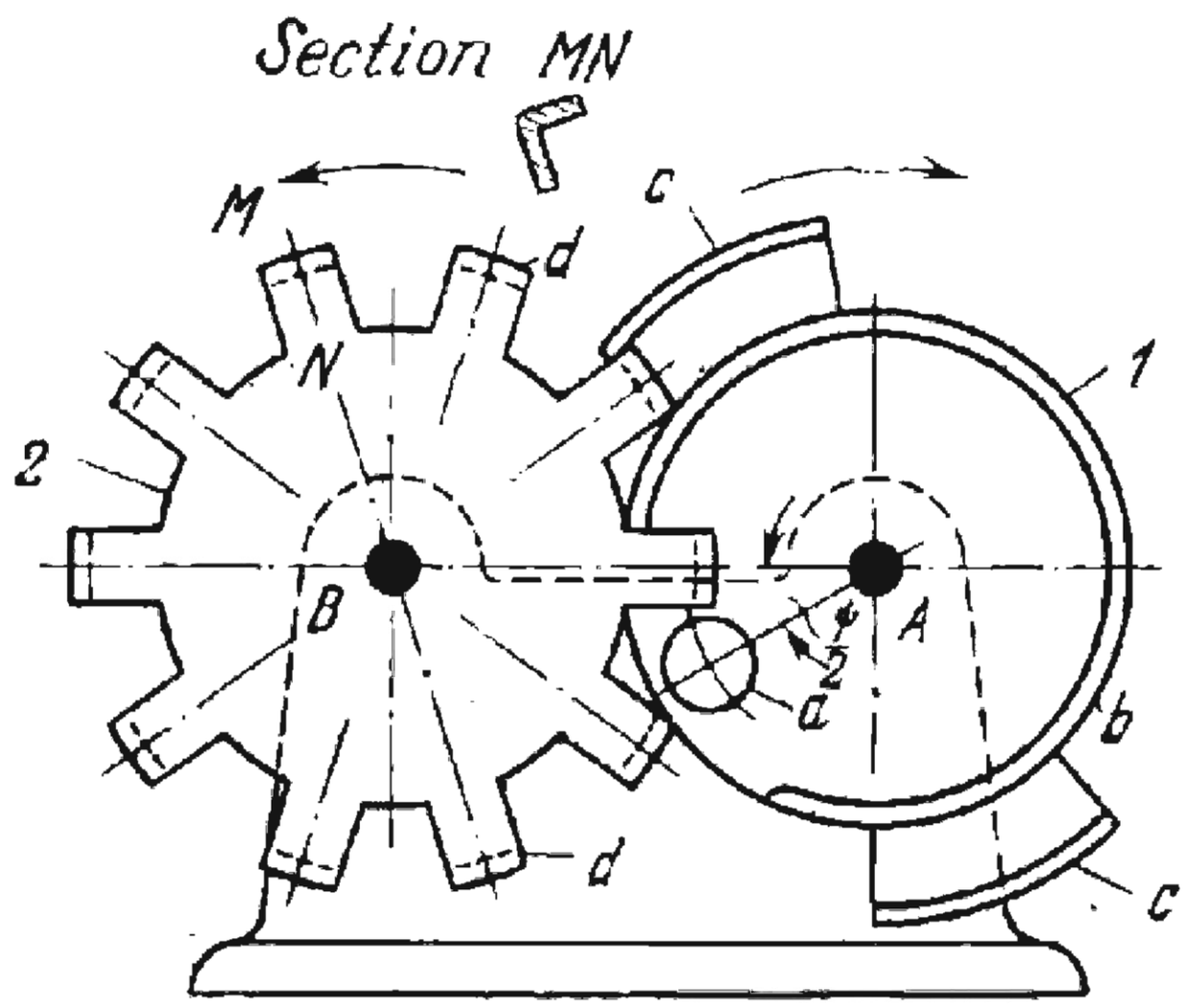

Pin wheel *1* rotates about fixed axis *A* and carries pin *a* which consecutively engages teeth *d* of wheel *2*. Wheel *2* rotates about fixed axis *B* and has ten symmetrically located teeth *d*. When driving pin wheel *1* turns through the angle ψ, wheel *2* is turned through one tenth of a revolution. Unintentional rotation of wheel *2* during its idle periods is prevented by concentric surfaces *b* and *c* of pin wheel *1* which engage a tooth *d* of wheel *2* just before and just after its rotation period, and, in subsequent rotation, by surface *b* which engages two teeth *d* of wheel *2*.

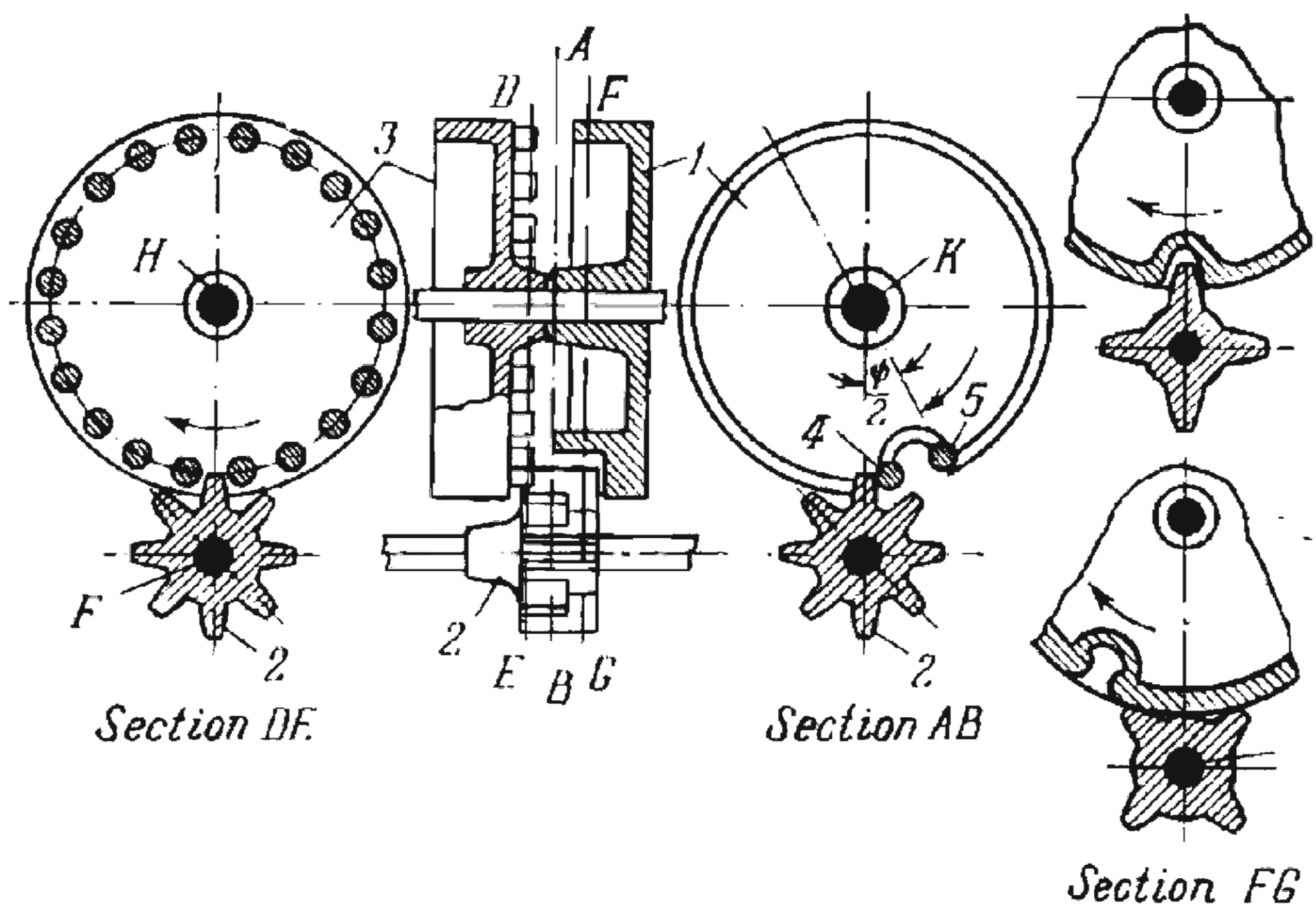

When driving pin wheel *1*, carrying two pins, *4* and *5*, turns through angle ψ about fixed axis *K*, intermediate sprocket *2* and pin wheel *3*, constantly engaged to sprocket *2*, turn about fixed axes *F* and *H* through an angle of two teeth. Thus pin wheel *3*, carrying 20 pins, turns through one tenth of a revolution. Alternate teeth of sprocket *2* have a shorter face width. During each idle period of pin wheel *3*, two full width teeth of sprocket *2* engage the outer circumference of driving pin wheel *1*, thereby preventing unitentional rotation of pin wheel *3*.

SECTION SIXTEEN

Ratchet-Gear Mechanisms

RG

1. General-Purpose Three-Link Mechanisms 3L (2660 through 2697)
2. General-Purpose Four-Link Mechanisms 4L (2698 through 2709)
3. General-Purpose Multiple-Link Mechanisms ML (2710 through 2740)
4. Dwell Mechanisms D (2741 through 2745)
5. Governor Mechanisms G (2746 through 2752)
6. Mechanisms of Measuring and Testing Devices M (2753)
7. Stop, Detent and Locking Mechanisms SD (2754 through 2763)
8. Brake Mechanisms Br (2764 and 2765)
9. Mechanisms of Materials Handling Equipment MH (2766 through 2775)
10. Sorting and Feeding Mechanisms SF (2776 through 2780)
11. Switching, Engaging and Disengaging Mechanisms SE (2781)
12. Mechanisms of Other Functional Devices FD (2782 through 2790)

2660	SPRING-PAWL RATCHET MECHANISM	RG 3L

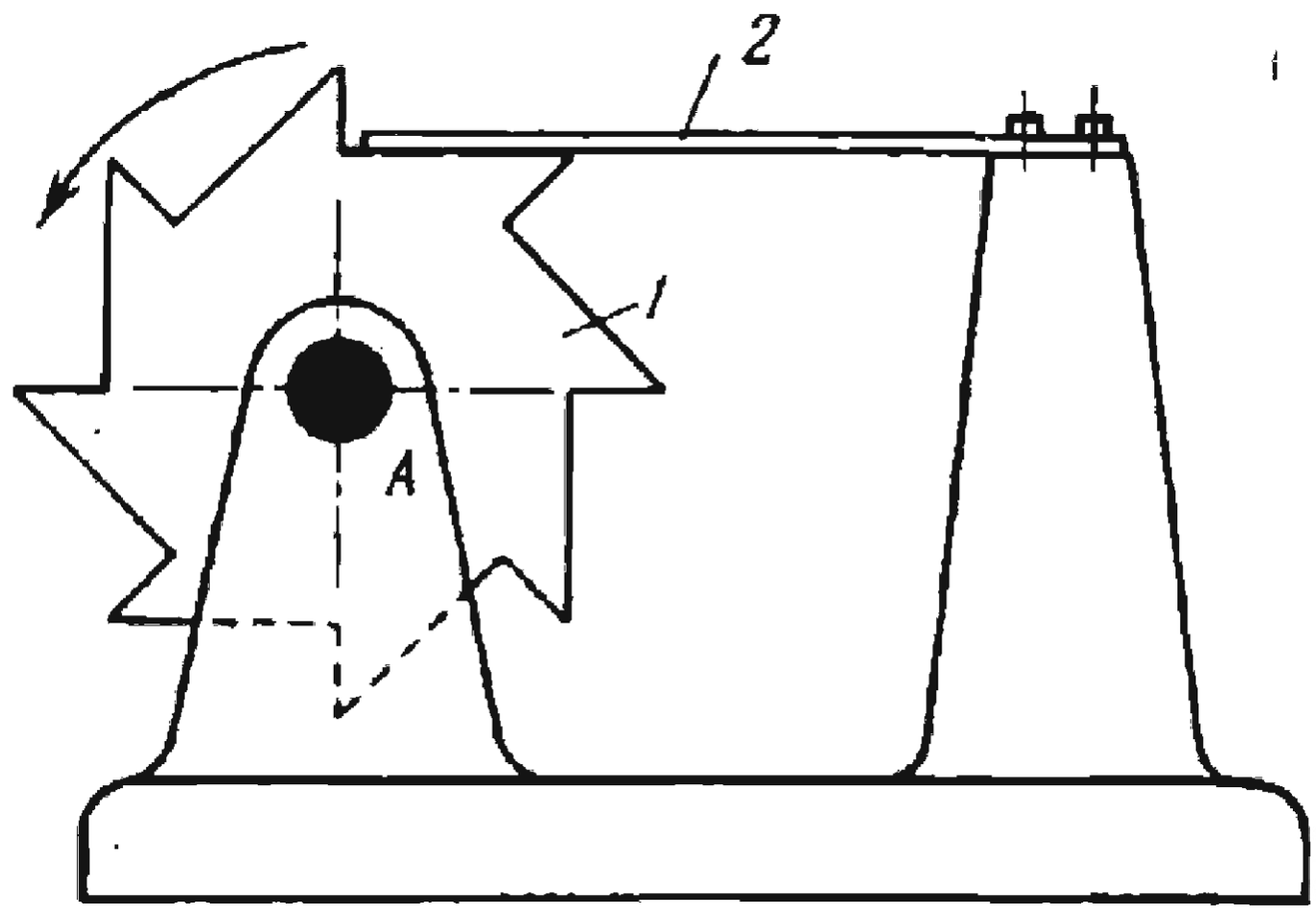

Ratchet wheel *1* rotates counterclockwise about fixed axis *A*. Spring pawl *2* prevents reverse rotation of wheel *1*.

2661	INTERNAL-TOOTH REVERSIBLE-PAWL RATCHET MECHANISM	RG 3L

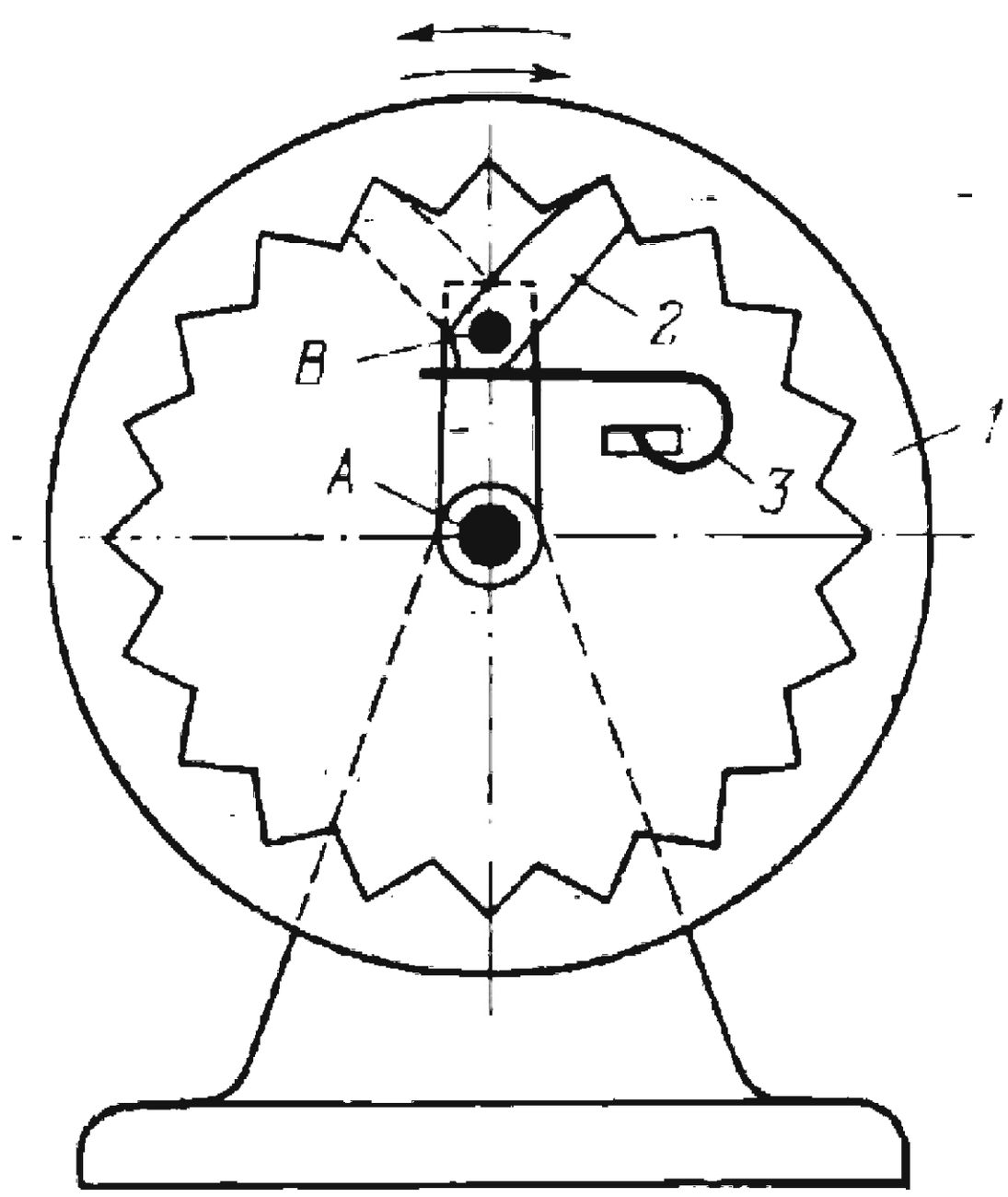

Internal-tooth ratchet wheel *1* rotates about fixed axis *A*. Reversible pawl *2* can be turned about fixed axis *B* and is held in either position by flat spring *3*. The direction in which wheel *1* can rotate depends upon the position of pawl *2*.

2662	PIN-TYPE RATCHET ESCAPEMENT MECHANISM	RG 3L

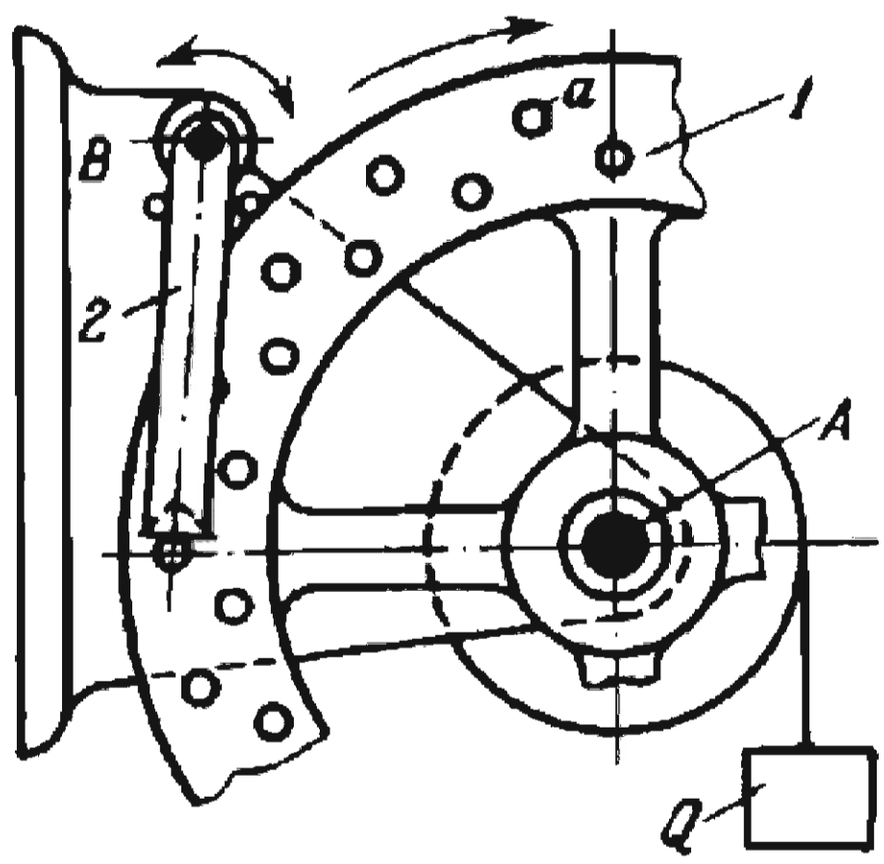

Weight *Q* applies a torque that tends to rotate pin-type ratchet wheel *1* clockwise about fixed axis *A*. Wheel *1* carries pins *a* located in two concentric circles. There are the same number of pins in each circle; they are equally spaced around each circle; and the pins of one circle are displaced from those of the other circle by one half pitch. Pawl *2* oscillates about fixed axis *B* and alternately engages pins *a* of the two circles so that wheel *1* has intermittent rotation.

2663	RATCHET-TOOTH RACK MECHANISM	RG 3L

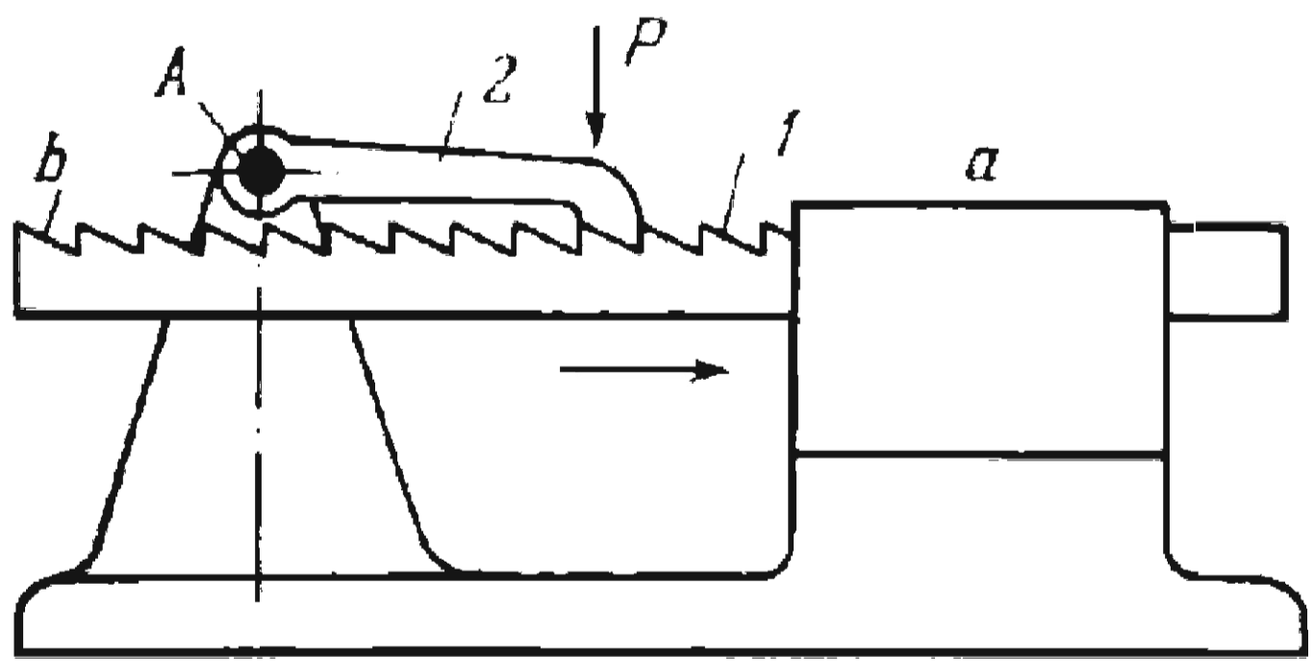

Ratchet-tooth rack *1* with teeth *b* can slide in fixed guide *a* to the right. Pawl *2* turns about fixed axis *A* and is held in engagement with rack *1* by force *P*. The pawl prevents motion of the rack in the reverse direction.

2664	FRICTION-RACK RATCHET MECHANISM	RG 3L

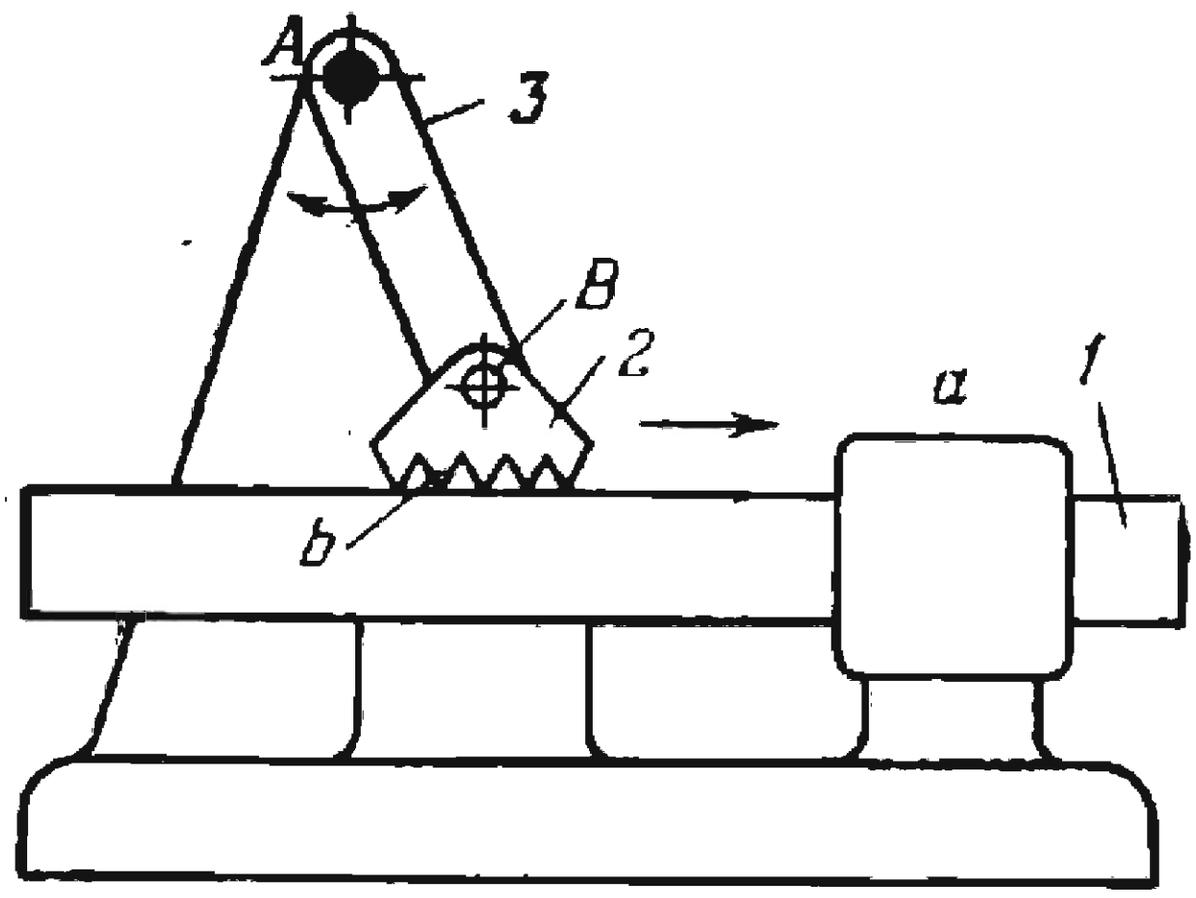

Toothless rack *1* can slide in fixed guide *a* to the right. Link (pawl) *3* turns about fixed axis *A* and is connected by turning pair *B* to shoe *2* with serrations *b*. With sufficient friction between the serrated surface of shoe *2* and the top surface of rack *1* the shoe prevents motion of the rack in the reverse direction.

2665	RATCHET-GEAR CLOCK SPRING WINDING MECHANISM	RG 3L

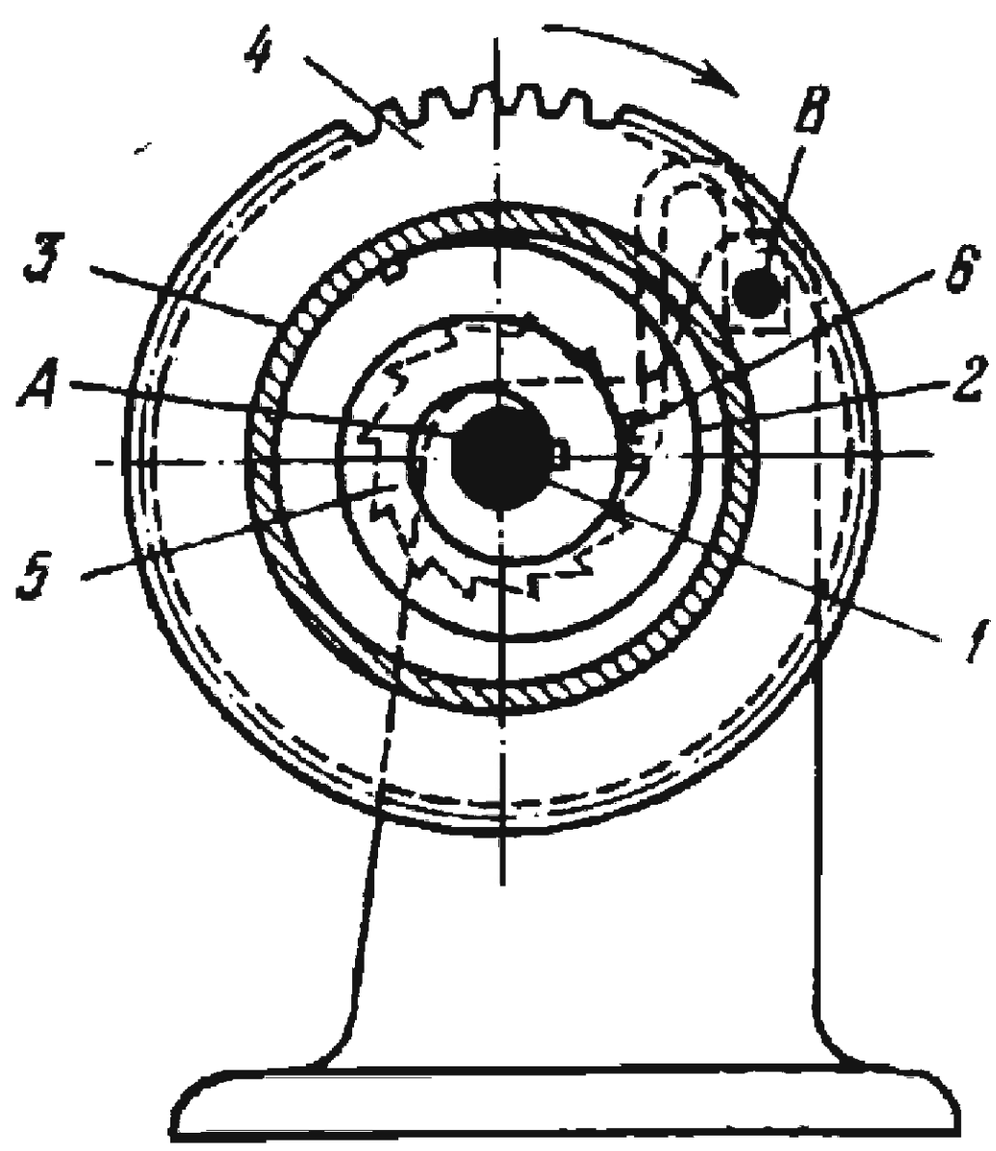

Freely mounted on shaft *1* is gear *4* to which drum *3* is rigidly attached. Flat spiral spring *2* is fastened at one end to the inside wall of drum *3* and at the other to shaft *1*. The spring is wound by turning shaft *1* clockwise about fixed axis *A*. Spring *2* is held in the wound position by ratchet wheel *5*, keyed on shaft *1*, and pawl *6* which turns about fixed axis *B*. As it unwinds, spring *2* rotates drum *3* and gear *4* clockwise.

2666	ESCAPEMENT MECHANISM	RG 3L

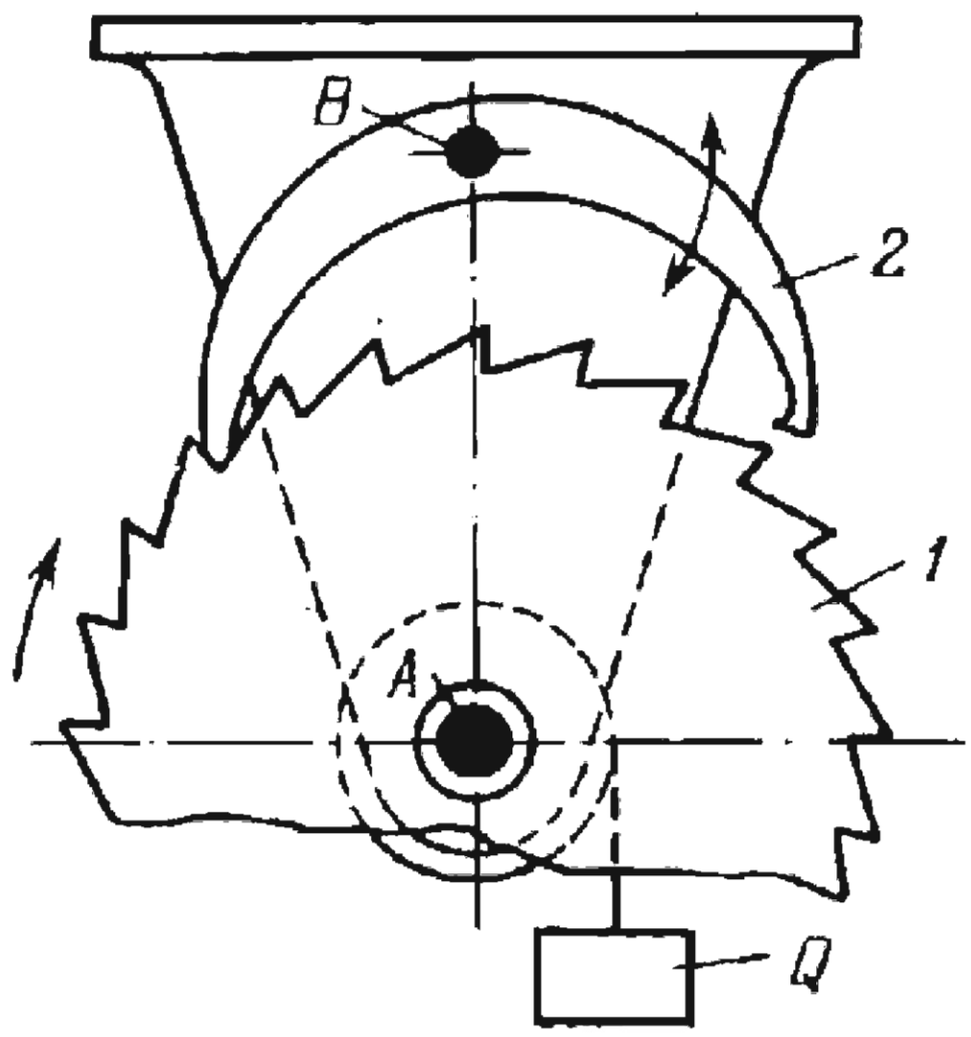

When double-ended pawl (anchor) *2* oscillates about fixed axis *B*, ratchet (escape) wheel *1*, to which a torque is applied by weight *Q*, rotates intermittently about fixed axis *A*.

2667	ESCAPEMENT MECHANISM	RG 3L

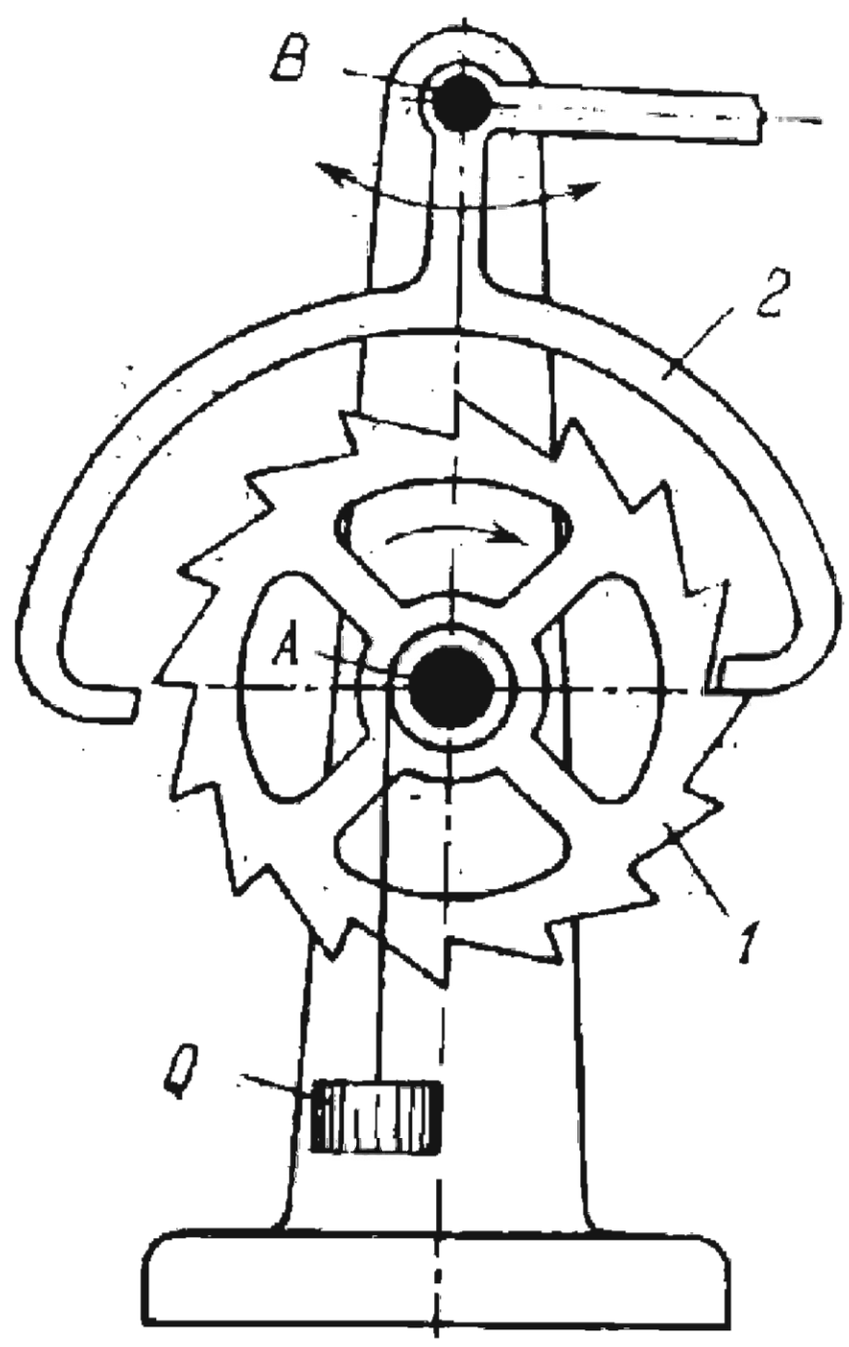

When double-ended pawl (anchor) *2* oscillates about fixed axis *B*, ratchet (escape) wheel *1*, to which a torque is applied by weight *Q*, rotates intermittently about fixed axis *A*.

2668	ESCAPEMENT MECHANISM	RG 3L

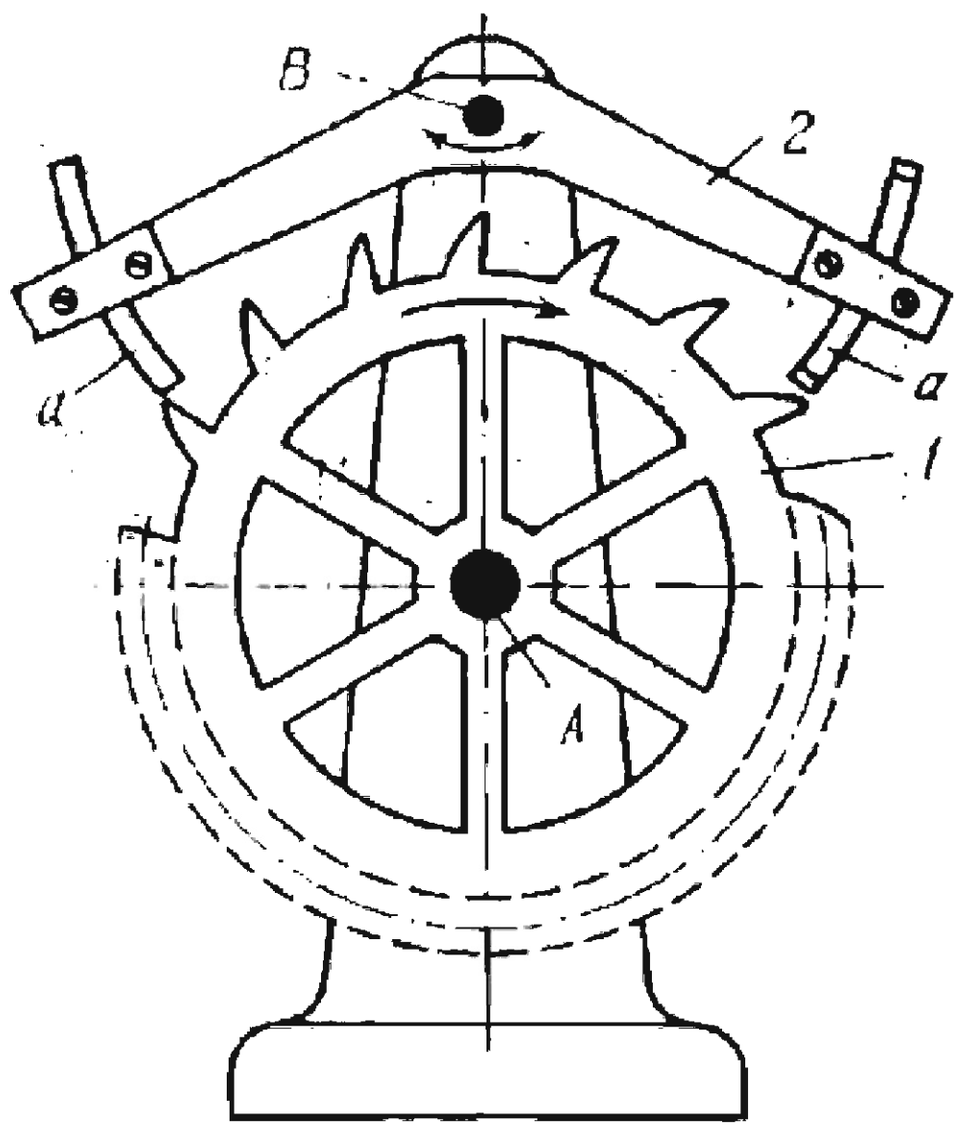

When double-ended pawl (anchor) *2*, carrying pallets *a*, oscillates about fixed axis *B*, ratchet (escape) wheel *1*, to which a constant torque is applied, rotates intermittently about fixed axis *A*.

2669	ESCAPEMENT MECHANISM	RG 3L

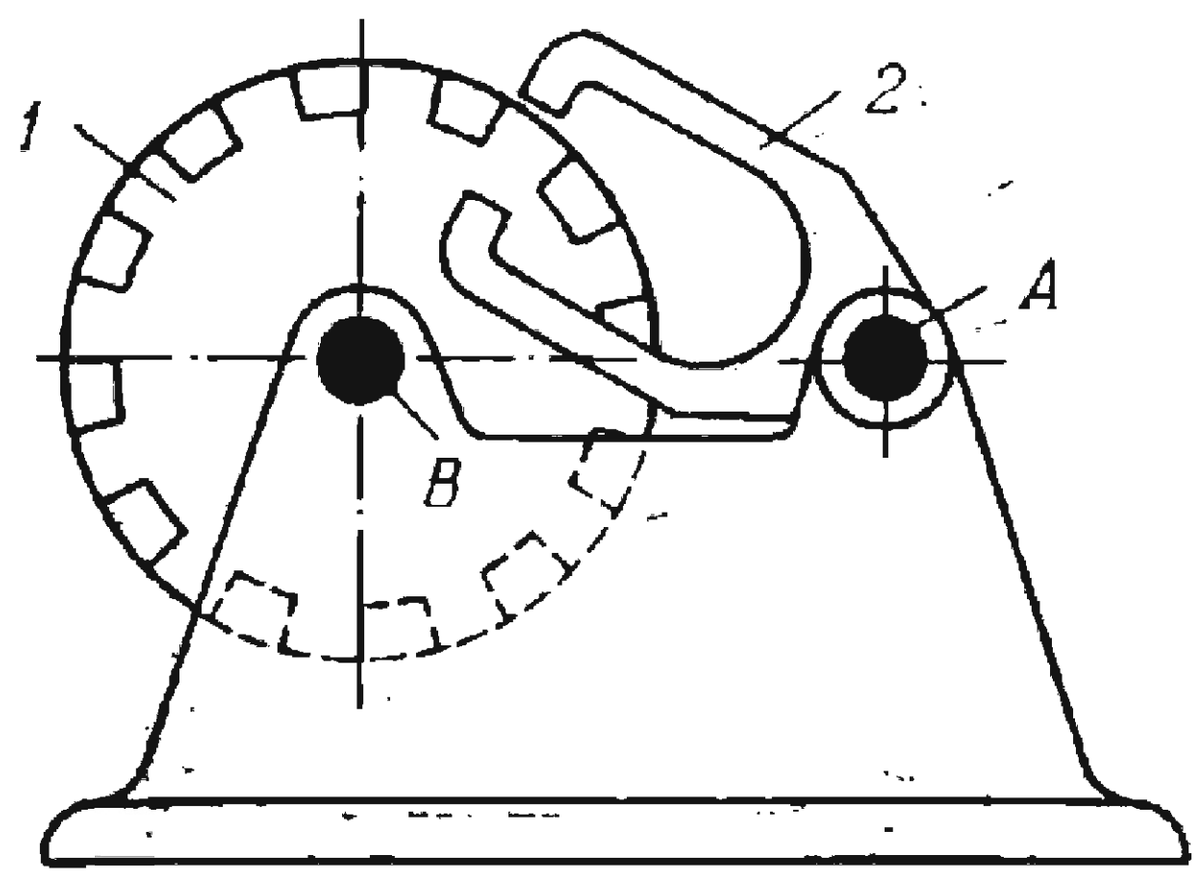

When double-ended pawl (anchor) *2* oscillates about fixed axis *A*, ratchet (escape) wheel *1*, to which a constant torque is applied, rotates intermittently about fixed axis *B*.

2670	SLIDING-PAWL RATCHET MECHANISM	RG 3L

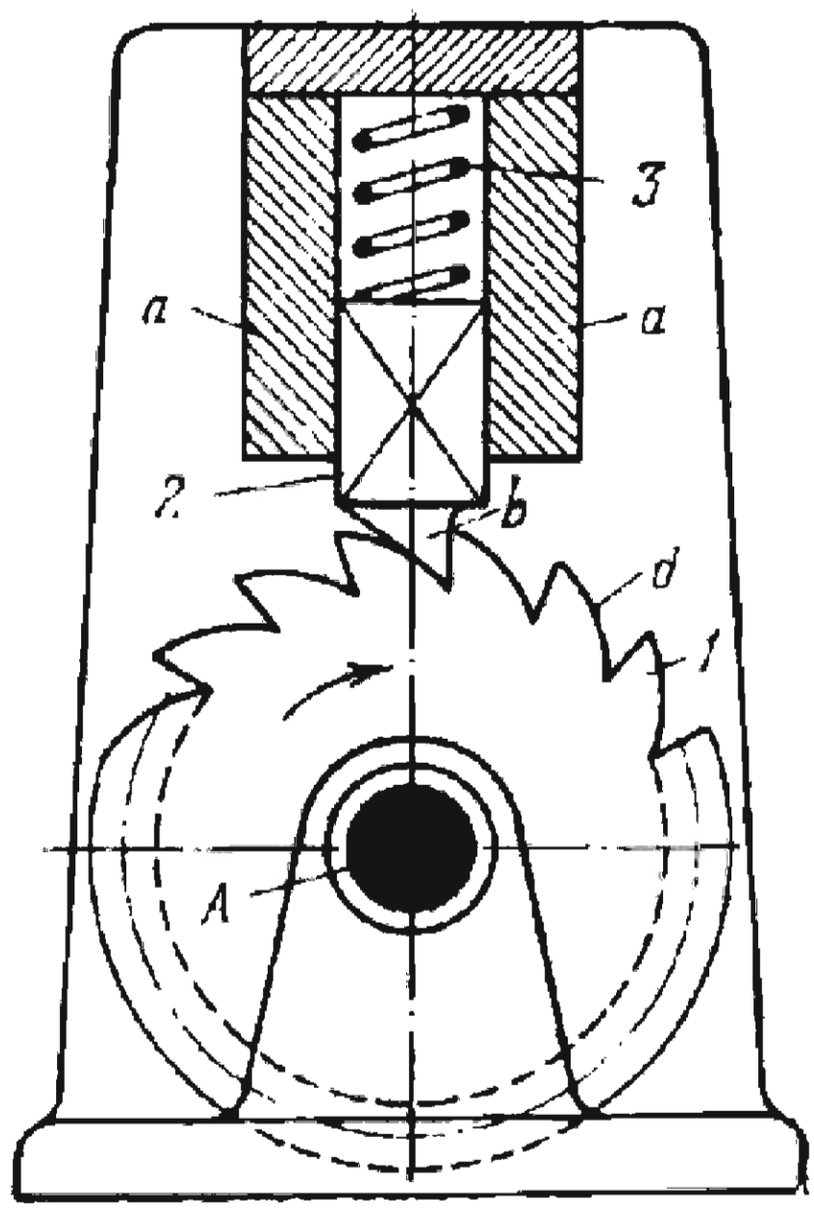

Ratchet wheel *1* rotates about fixed axis *A*. Prismatic pawl *2* slides in fixed guides *a-a* and its tooth *b* engages teeth *d* of wheel *1*. Spring *3* holds pawl *2* in constant engagement with ratchet wheel *1*, allowing it to rotate only clockwise.

2671	STEPPED-PAWL RATCHET MECHANISM	RG 3L

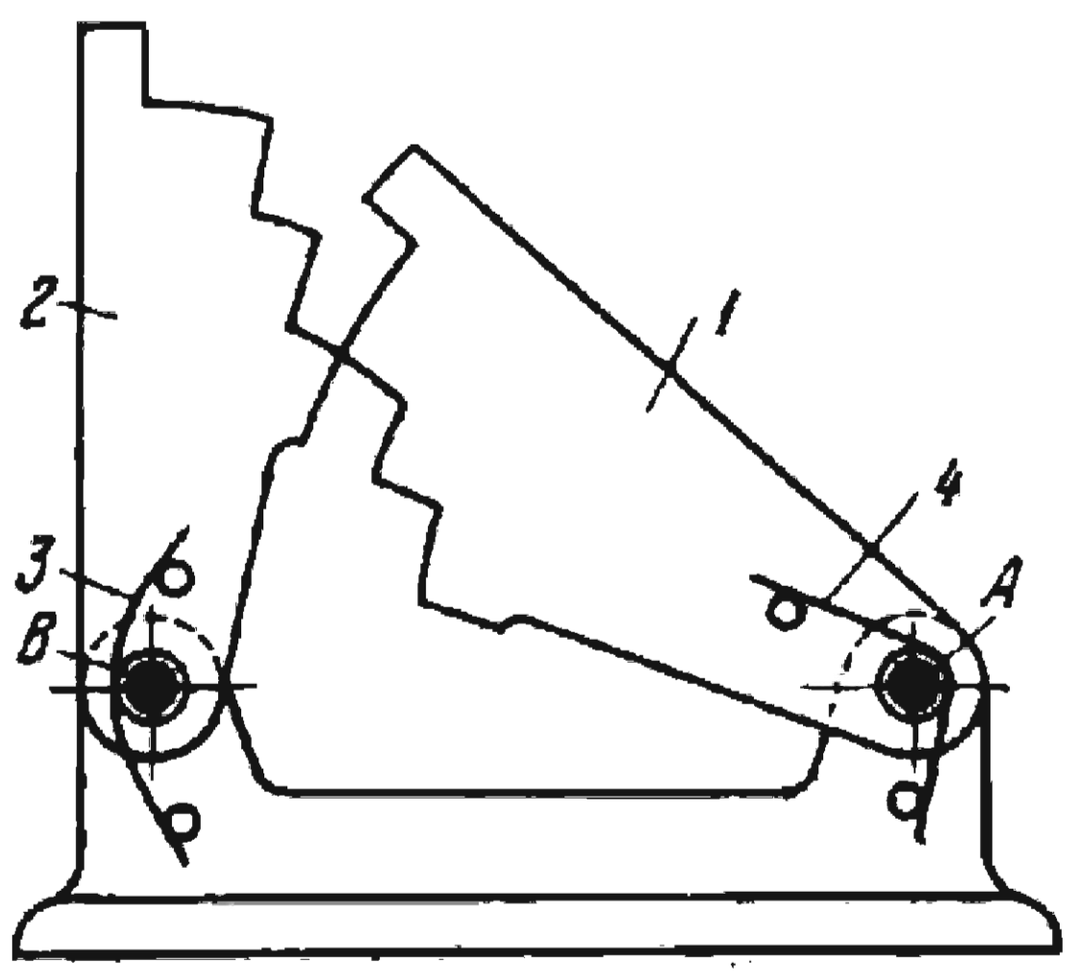

Toothed (stepped) segments *1* and *2* turn about fixed axes *A* and *B*, and have flat springs *4* and *3* which hold the segments in engagement. Each segment can operate as either a ratchet wheel or a pawl.

2672	RATCHET-TOOTH SAFETY CLUTCH MECHANISM	RG 3L

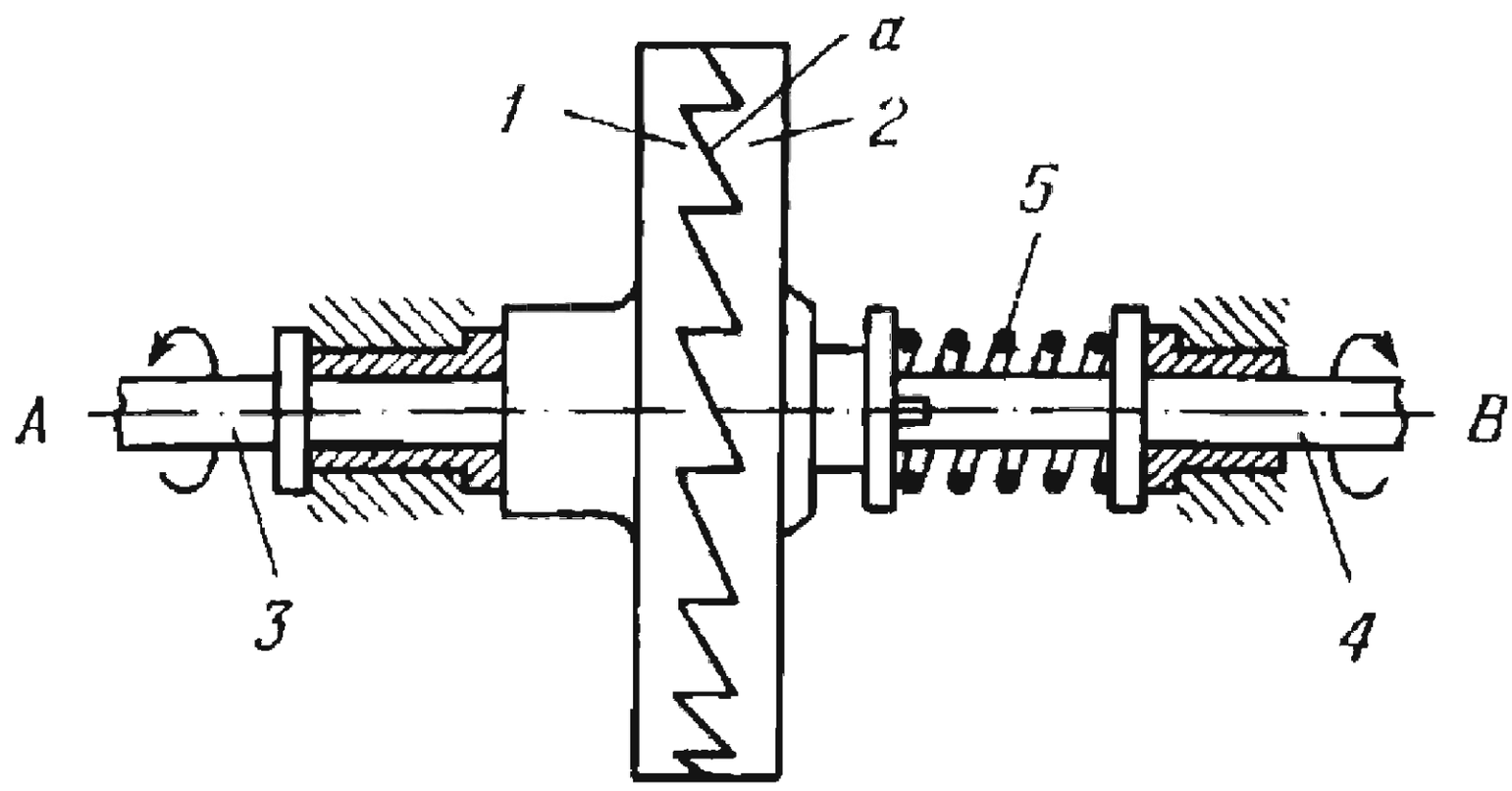

Disks *1* and *2* rotate about fixed axes *A* and *B* and have identical ratchet-type teeth *a* on their mating faces. Rotation can be transmitted from shaft *3* to shaft *4* only in the direction shown by the arrows. If the direction of the driving disk *1* is reversed, it will slide over stationary disk *2*. Spring *5* tends to hold the disks in engagement.

2673	REVERSIBLE-PAWL RATCHET MECHANISM	RG 3L

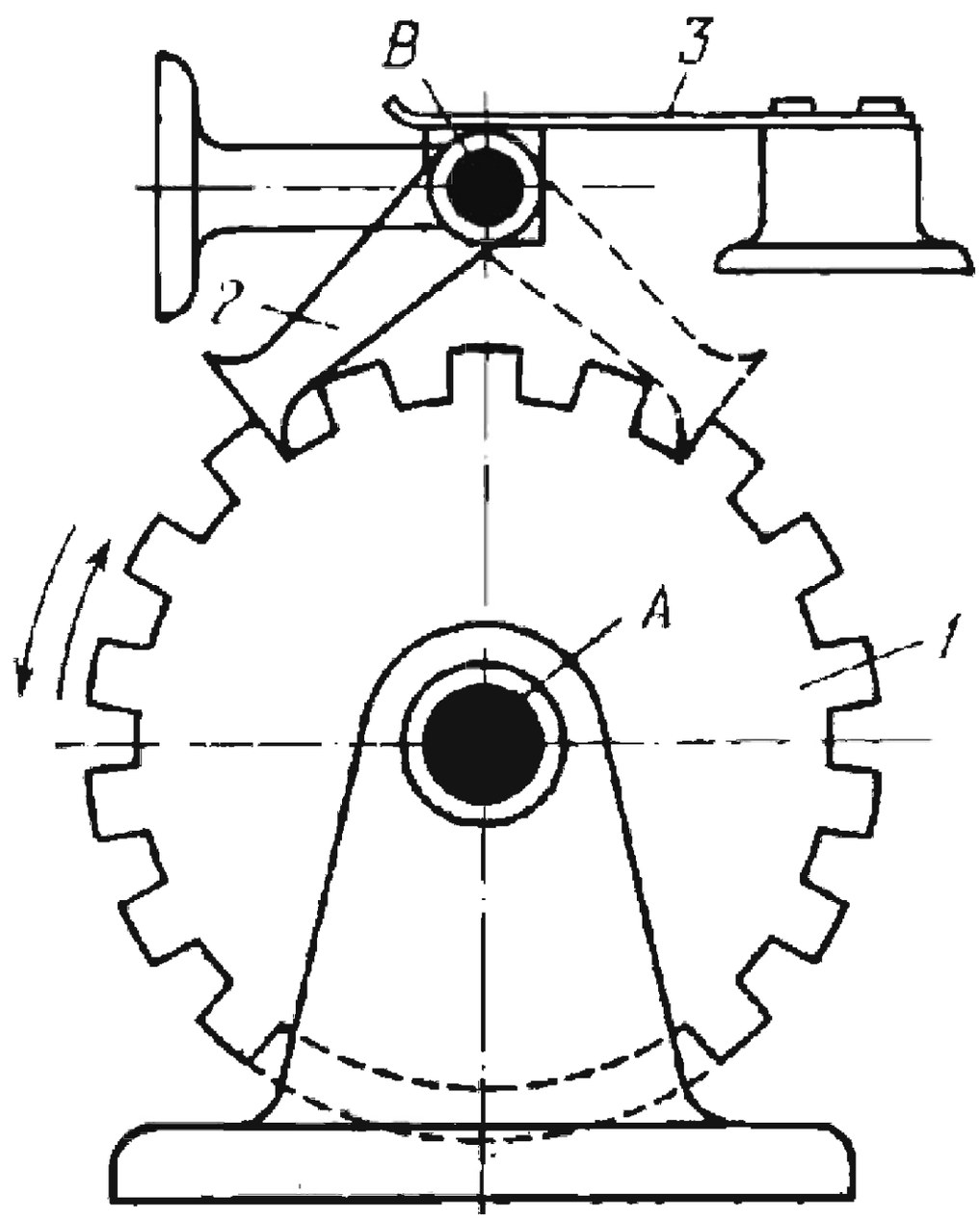

Ratchet wheel *1* rotates about fixed axis *A*. Reversible pawl *2* can be turned about fixed axis *B* and is held in either position by flat spring *3*. The direction in which wheel *1* can rotate depends upon the position of pawl *2*.

2674	REVERSIBLE-PAWL RATCHET MECHANISM	RG 3L

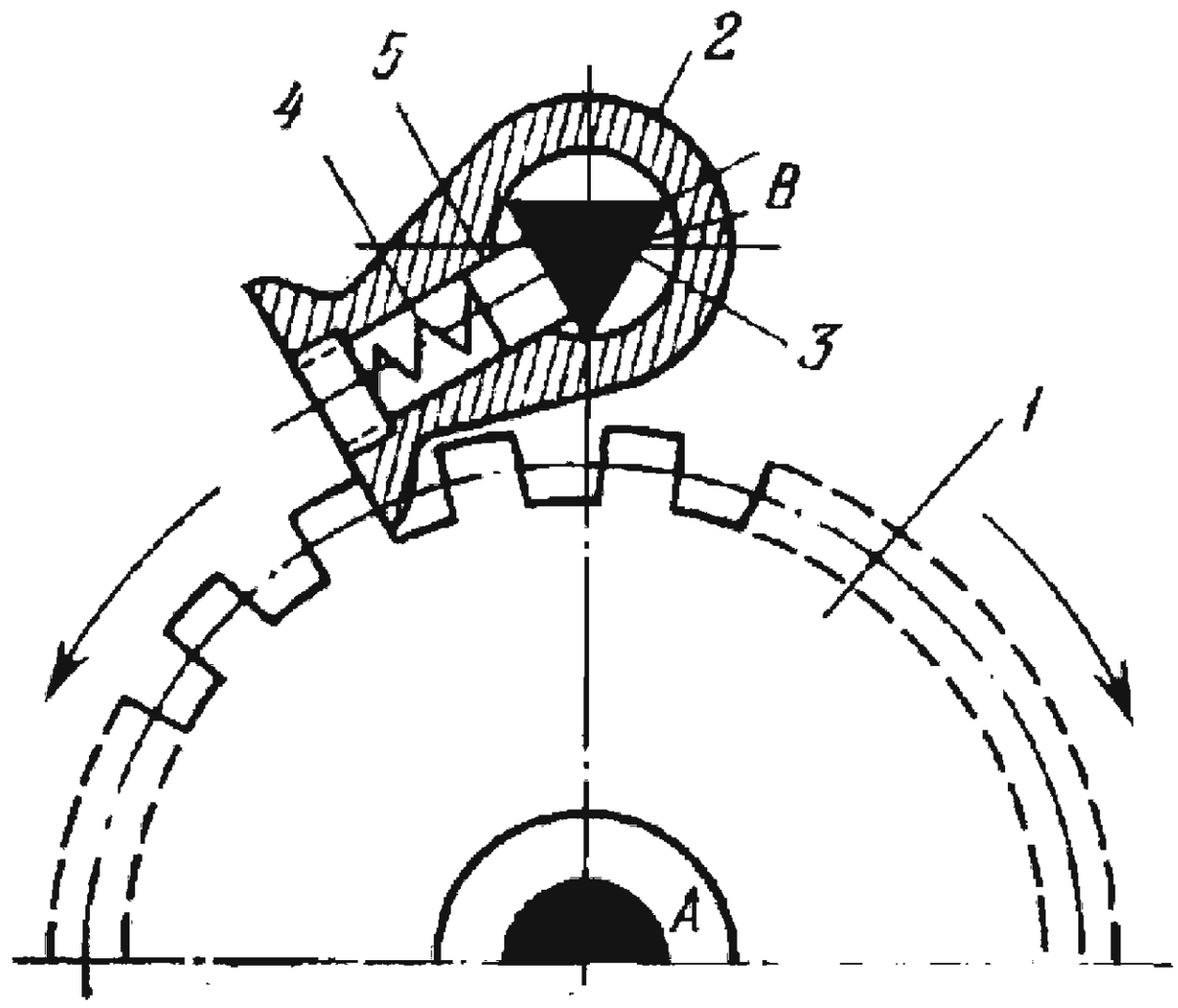

Ratchet wheel *1* rotates about fixed axis *A*. Reversible pawl *2* turns about fixed axis *B* which is designed as triangular prism *3*. The direction in which wheel *1* can rotate depends upon the position of pawl *2*. Pawl *2* is held in each of its two indexed positions by spring *4* and slider *5*.

2675	STEPPED-SEGMENT RATCHET MECHANISM	RG 3L

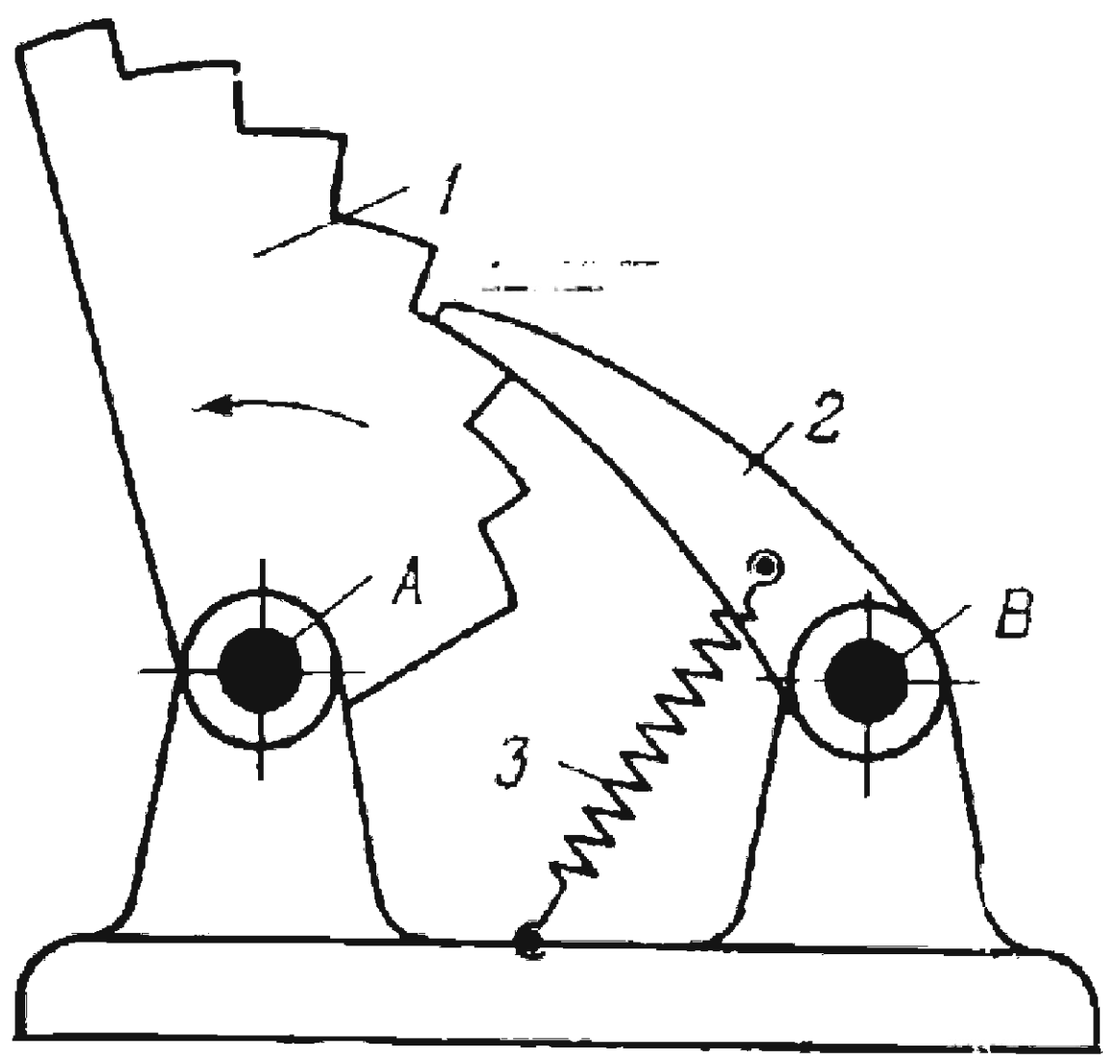

Stepped ratchet segment *1* can turn only counterclockwise about fixed axis *A*. Pawl *2* turns about fixed axis *B* and prevents rotation of segment *1* in the reverse direction. Spring *3* holds pawl *2* in engagement with segment *1*.

2676	SPIRAL RATCHET WHEEL MECHANISM	RG 3L

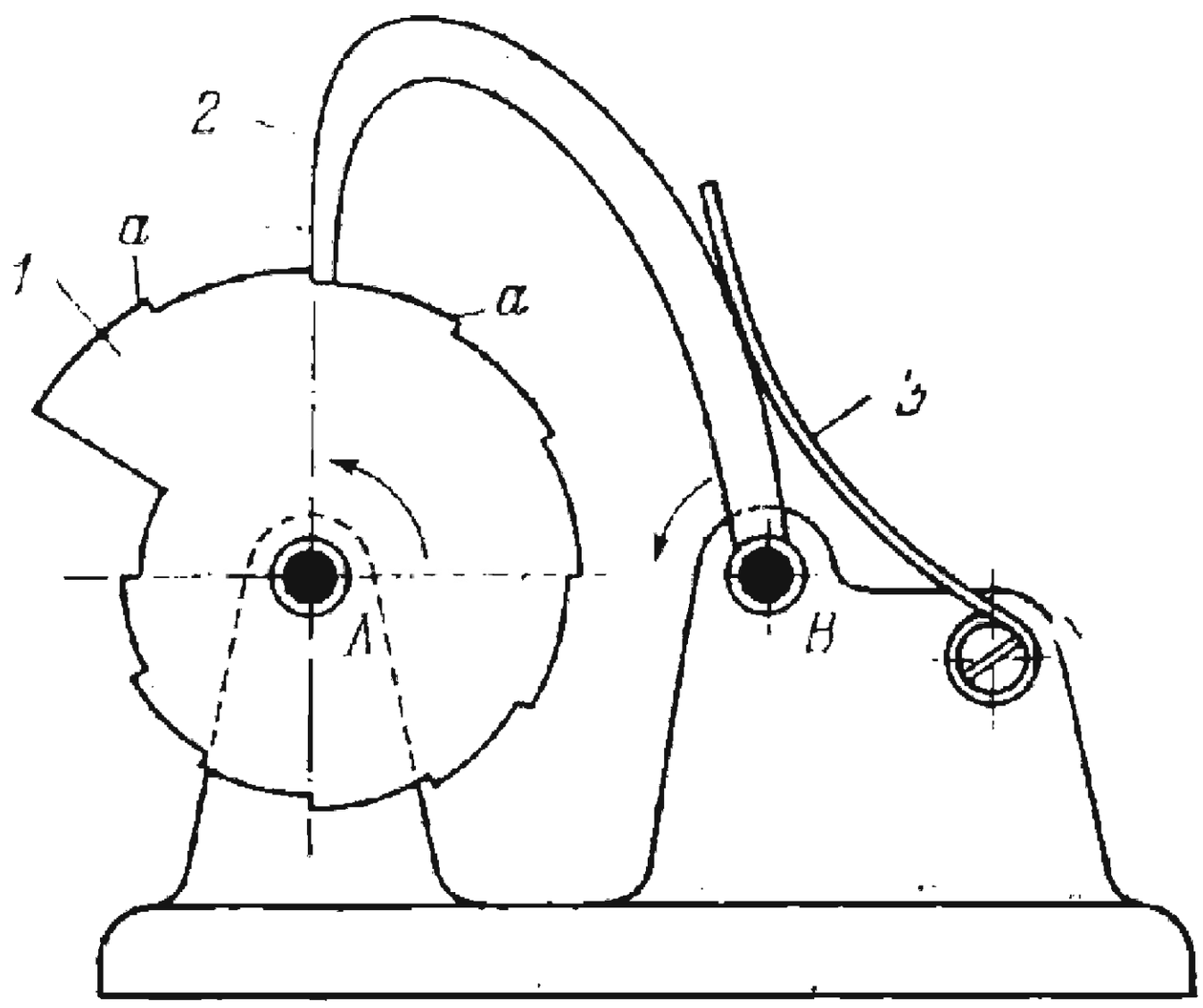

Ratchet wheel *1* rotates about fixed axis *A* and has teeth *a* located on its spiral contour. When wheel *1* rotates counterclockwise, pawl *2* turns stepwise in the counterclockwise direction about fixed axis *B*. Spring *3* holds pawl *2* in engagement with wheel *1*.

2677	SLIDING-PAWL RATCHET MECHANISM	RG 3L

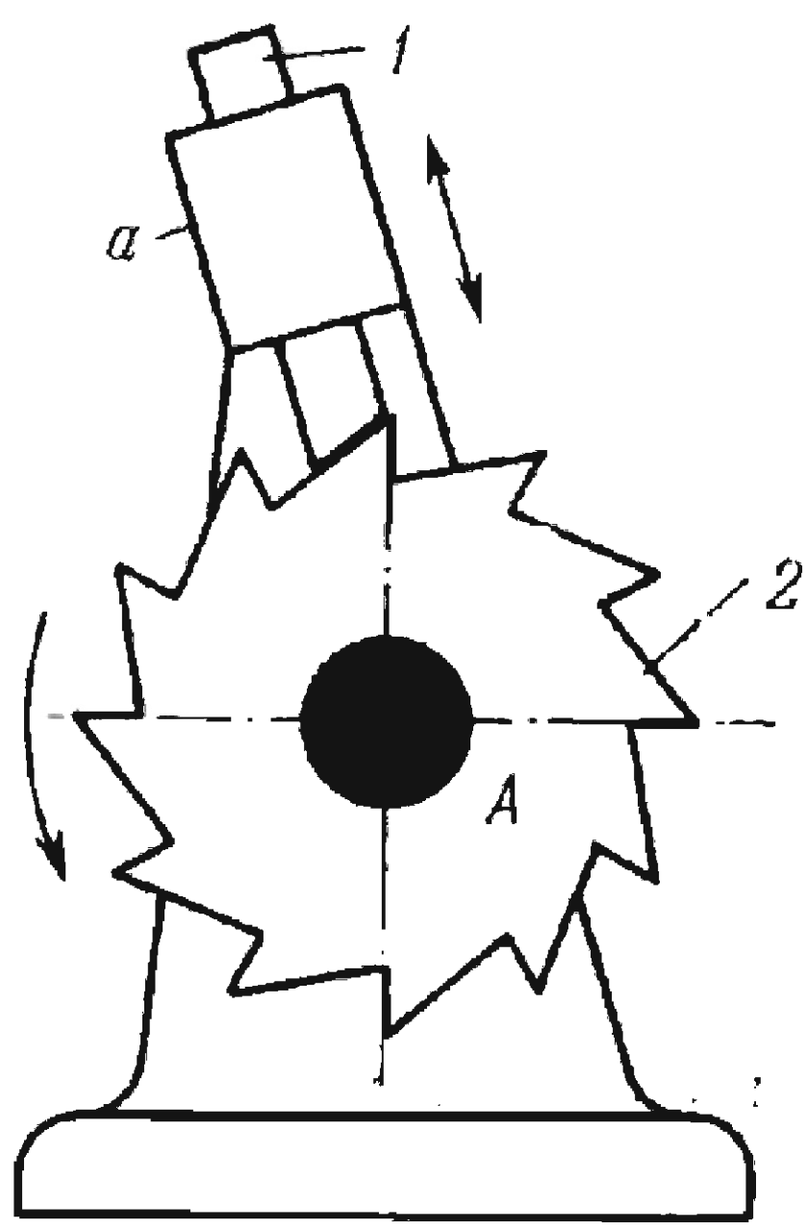

Ratchet wheel *2* rotates about fixed axis *A*. Prismatic pawl *1* slides in fixed guide *a* and engages the teeth of wheel *2*. A spring (not shown) holds pawl *1* in engagement with wheel *2*, allowing it to rotate only counterclockwise.

2678	SLIDING-PAWL RATCHET MECHANISM	RG 3L

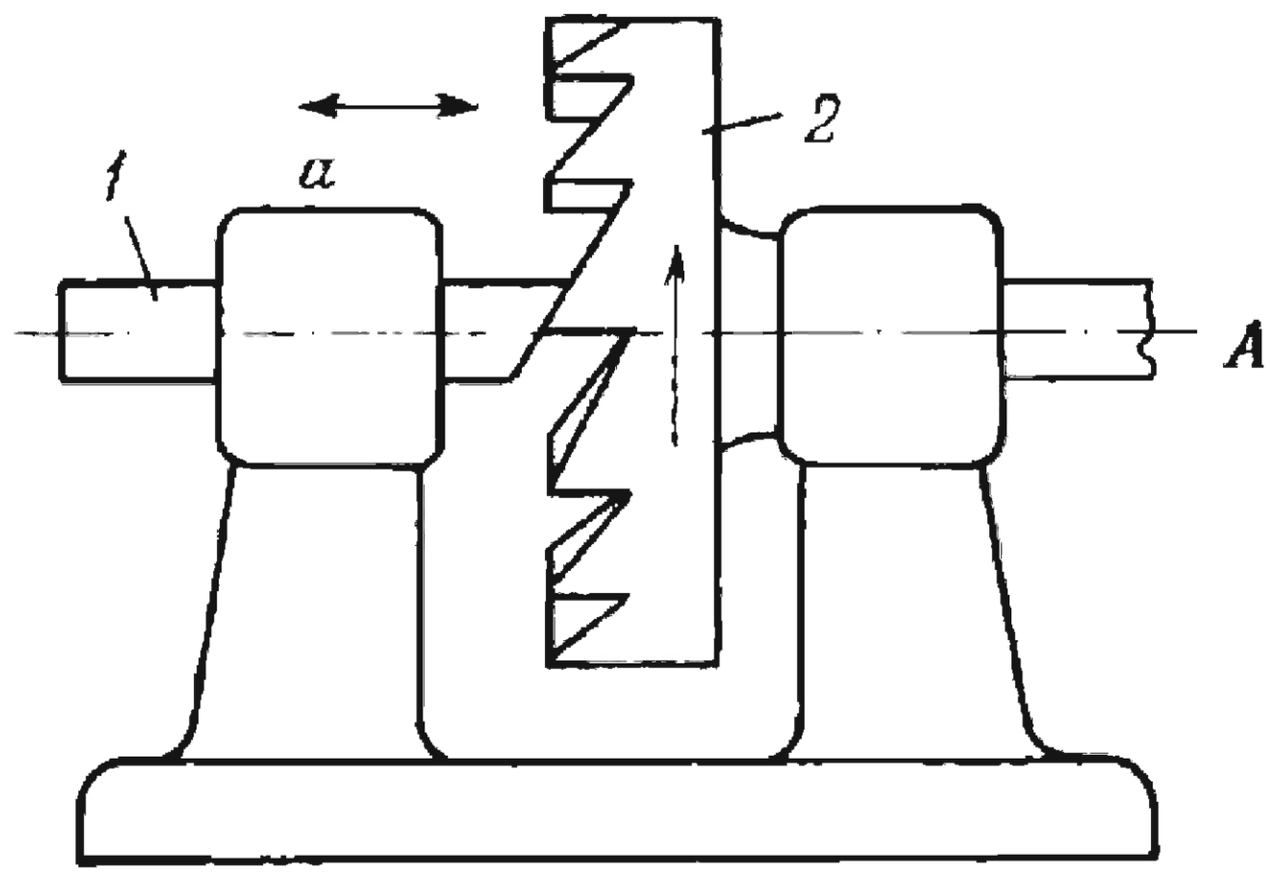

Face-type ratchet wheel *2* rotates about fixed axis *A*. Prismatic pawl *1* slides in fixed guide *a* and engages the teeth of wheel *2*. A spring (not shown) holds pawl *1* in engagement with wheel *2*, allowing it to rotate only in the direction shown by the arrow.

2679	SPRING-PAWL RATCHET MECHANISM	RG 3L

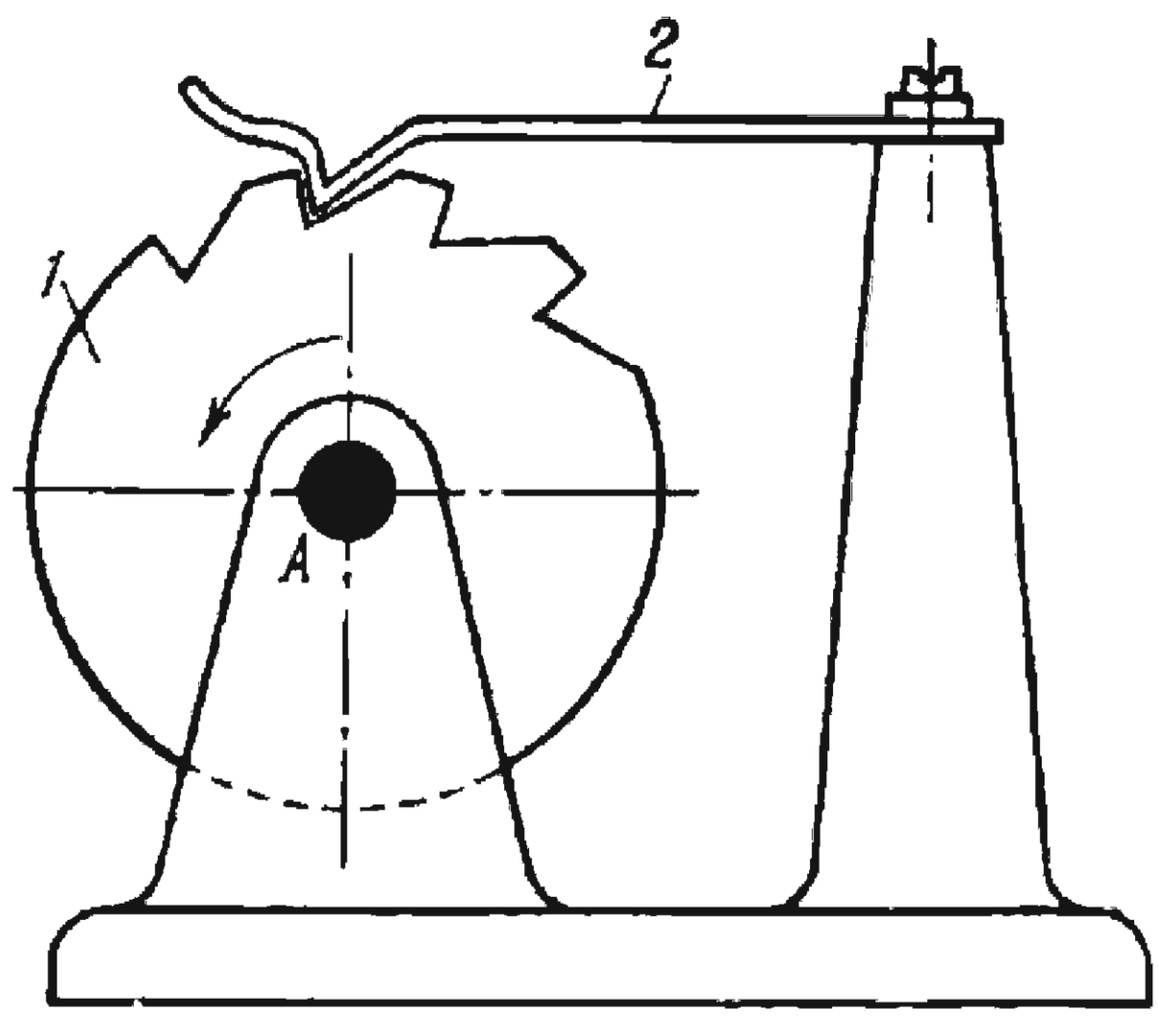

Ratchet wheel *1* rotates counterclockwise about fixed axis *A*. Spring pawl *2* prevents reverse rotation of wheel *1*.

2680	SPRING-PAWL RATCHET MECHANISM	RG 3L

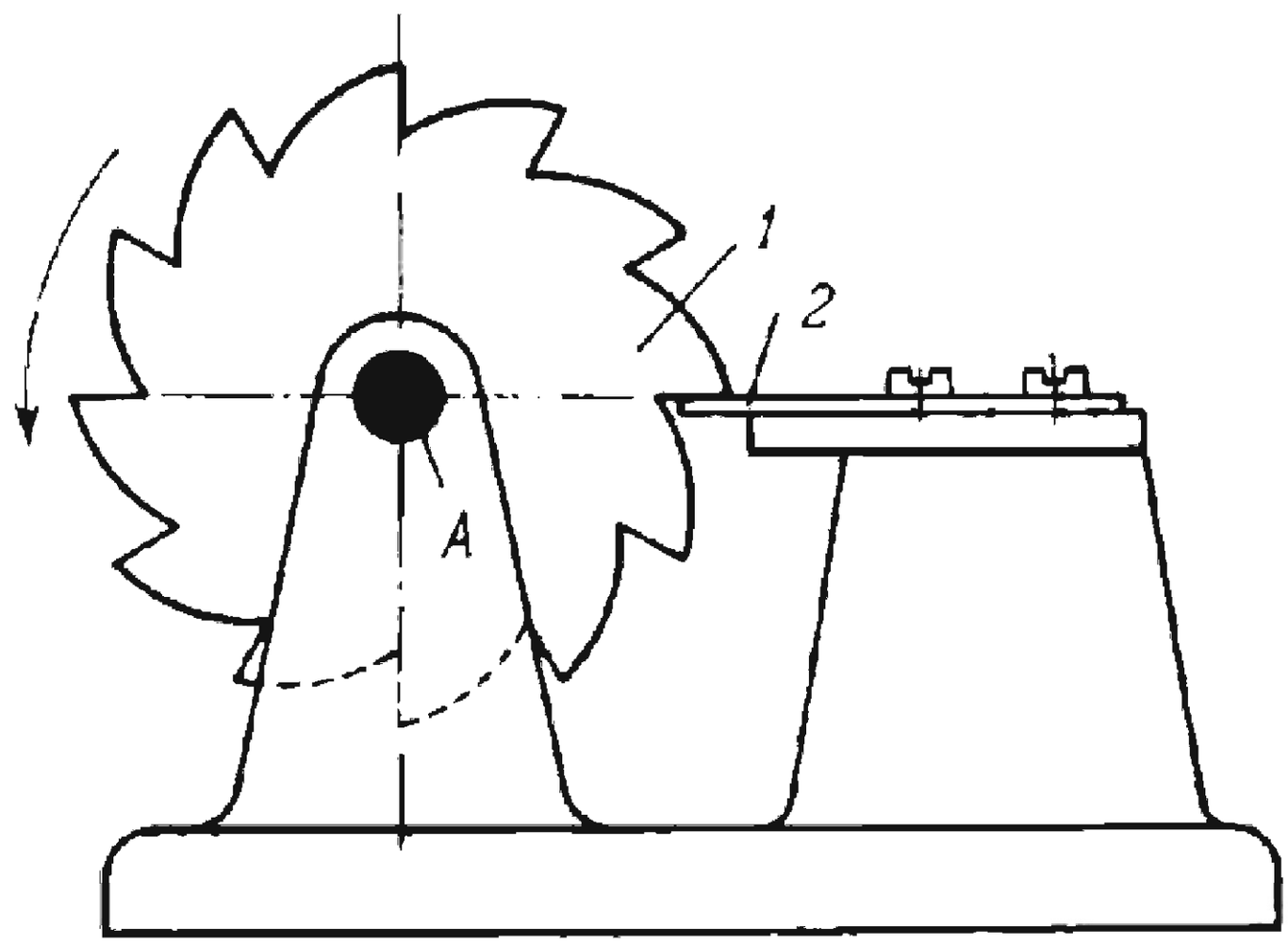

Ratchet wheel *1* rotates counterclockwise about fixed axis *A*. Spring pawl *2* prevents reverse rotation of wheel *1*.

2681	RATCHET-TOOTH RACK MECHANISM	RG 3L

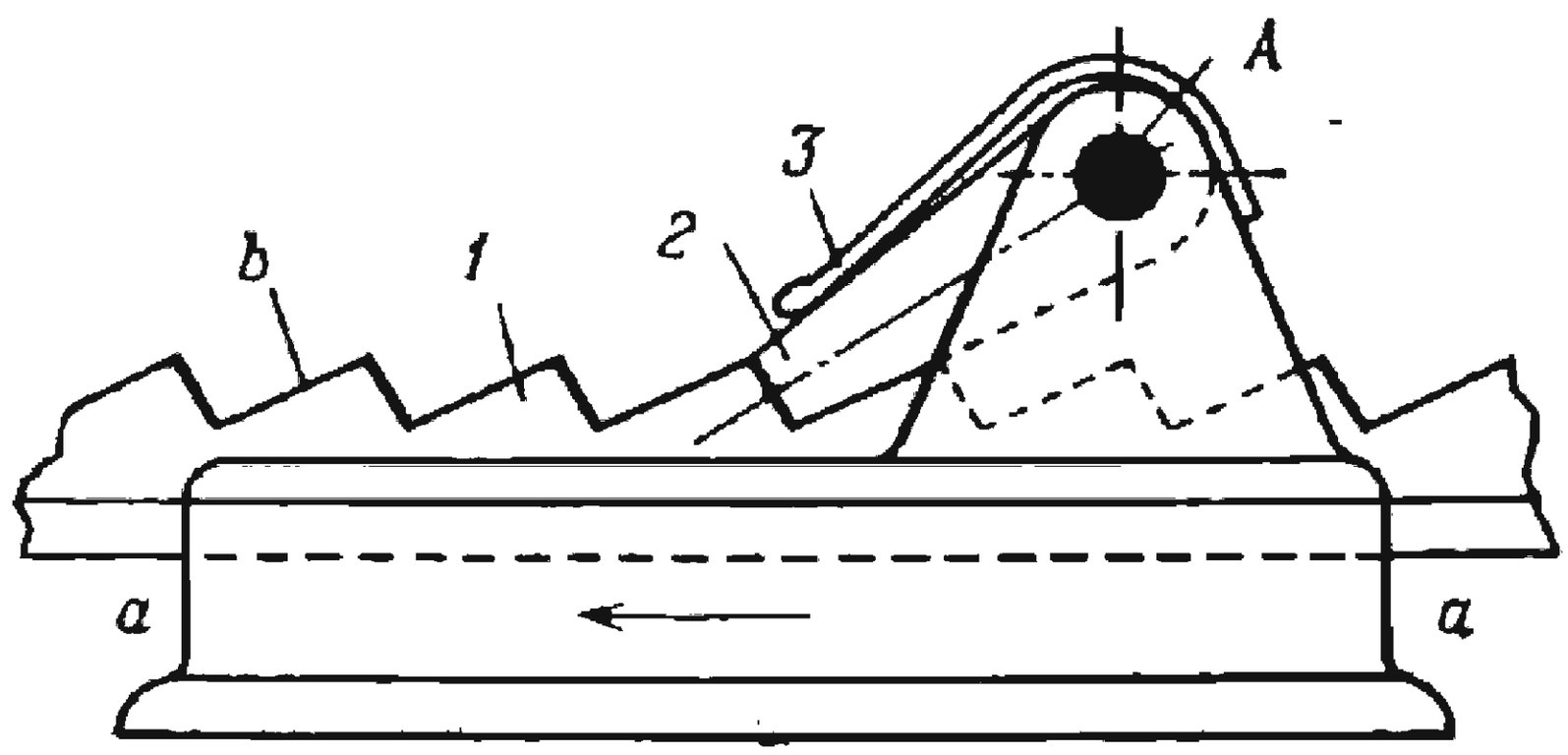

Ratchet-tooth rack *1* with teeth *b* can slide in fixed guides *a-a* to the left. Pawl *2* turns about fixed axis *A* and is held in engagement with rack *1* by flat spring *3*. The pawl prevents motion of the rack in the reverse direction.

2682	REVERSIBLE-PAWL RACK-TYPE RATCHET MECHANISM	RG 3L

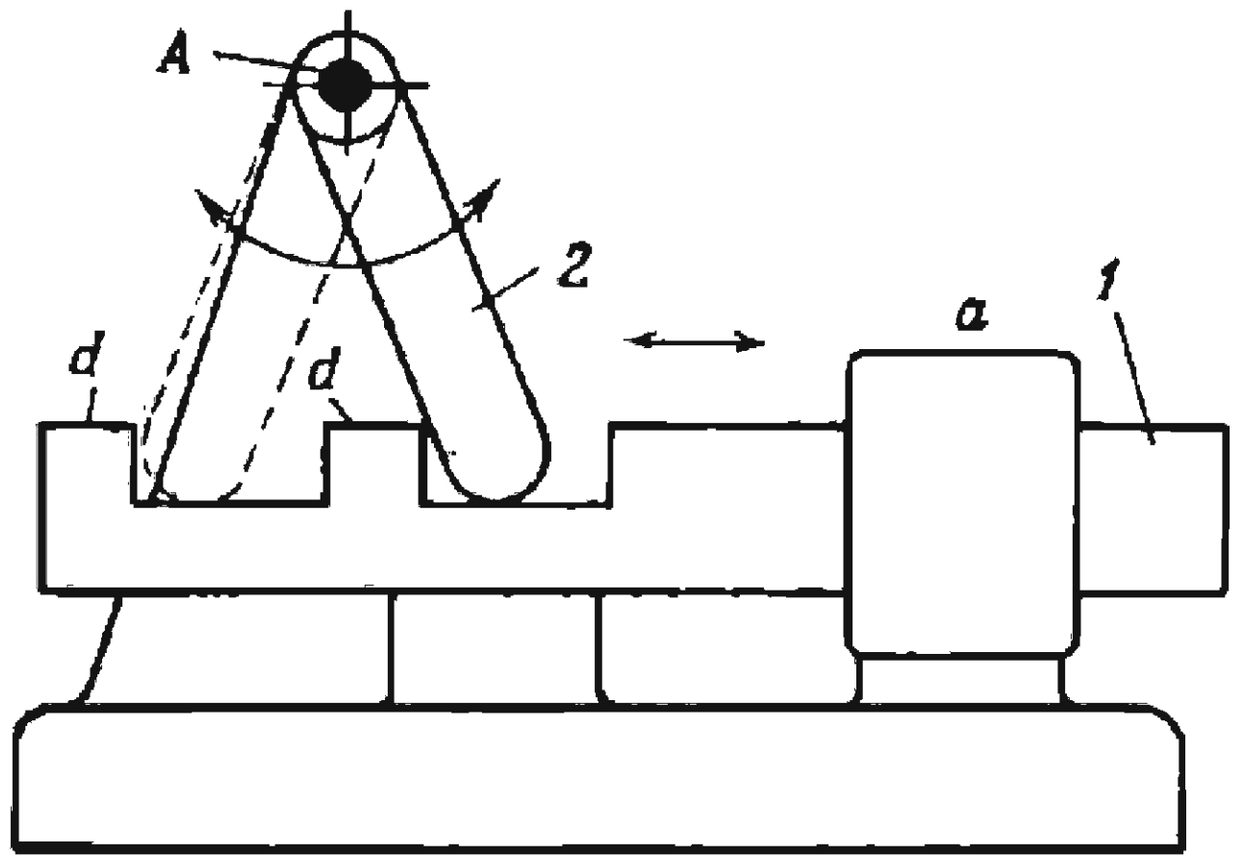

Rack *1* has rectangular teeth *d* and slides in fixed guide *a*. Reversible pawl *2* can be turned about fixed axis *A* and engages teeth *d* of rack *1*. Pawl *2* may be turned to the position shown by dash lines. In the first position the pawl allows rack motion only to the right; in the second position—only to the left. The pawl is held in engagement with the rack in either position by gravity.

2683	PIN-RACK RATCHET MECHANISM	RG 3L

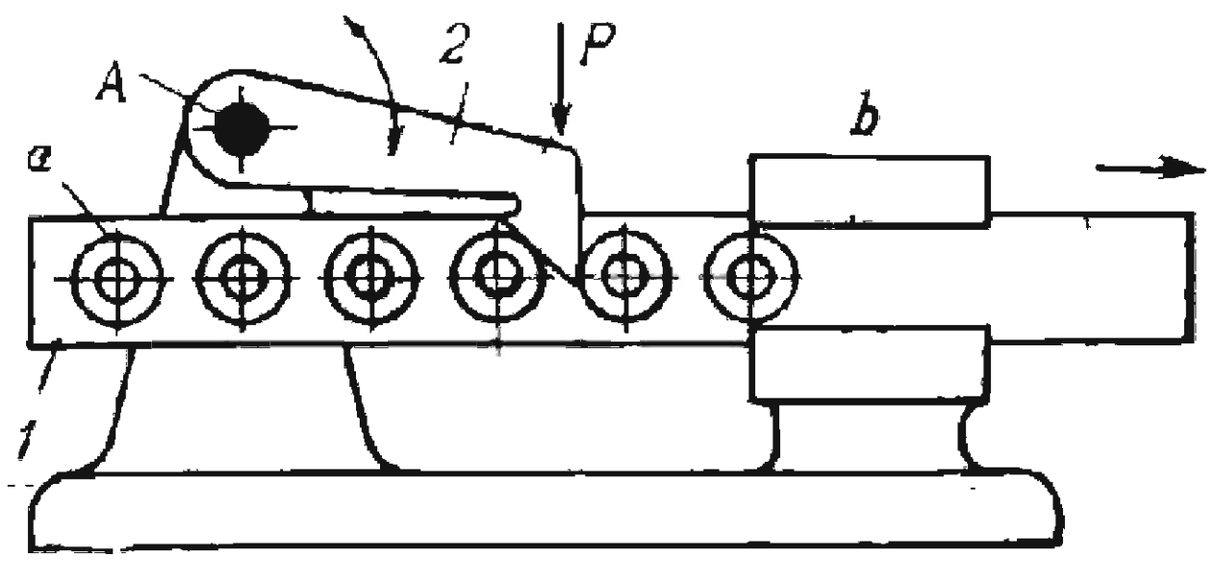

Pin rack *1* carries pins *a* and slides in fixed guide *b* to the right. Pawl *2* turns about fixed axis *A* and is held in engagement with pins *a* of rack *1* by force *P*. The pawl prevents motion of the rack in the reverse direction.

2684 RACK-TYPE SPATIAL RATCHET MECHANISM

RG 3L

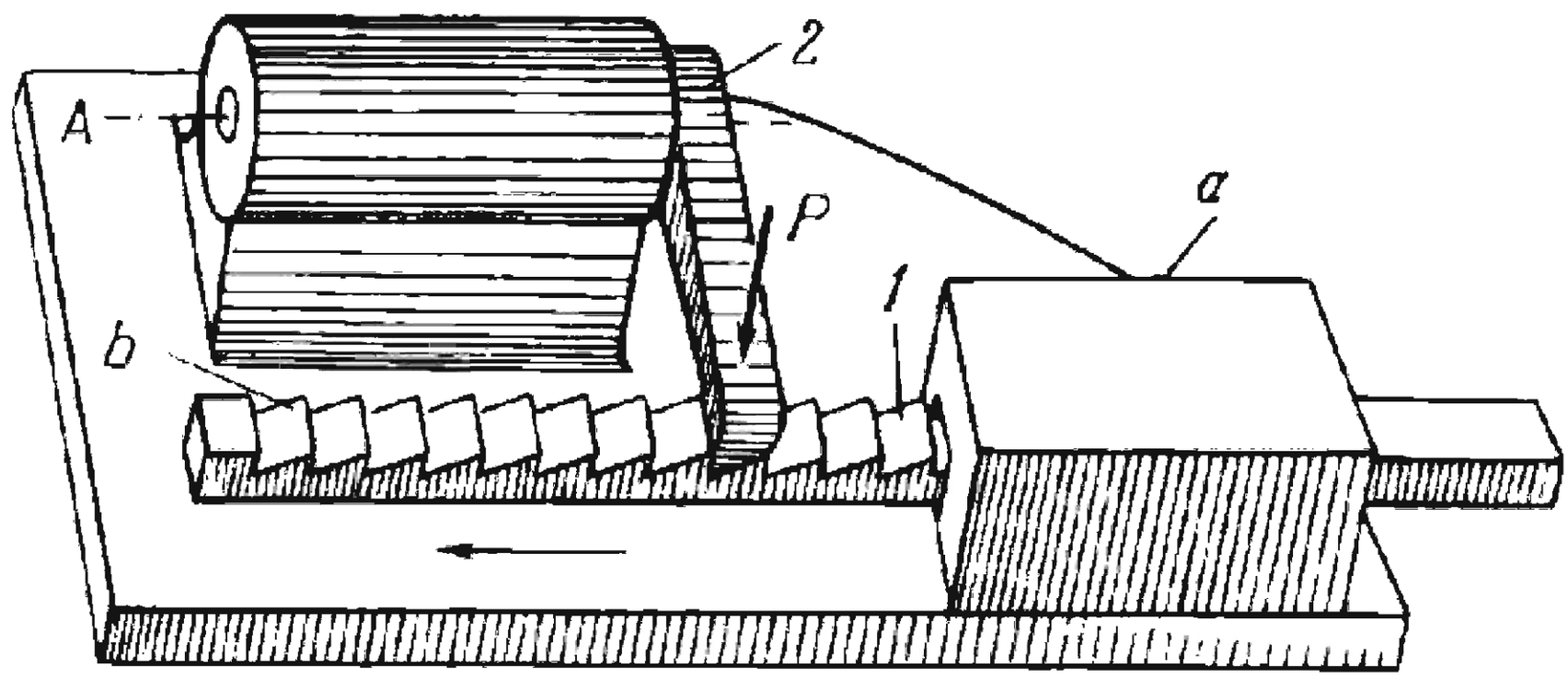

Ratchet-tooth rack *1* with teeth *b* slides in fixed guide *a* to the left. Pawl *2* turns about fixed axis *A* and is held in engagement with teeth *b* of rack *1* by force *P*. The pawl prevents motion of the rack in the reverse direction.

2685 ESCAPEMENT MECHANISM

RG 3L

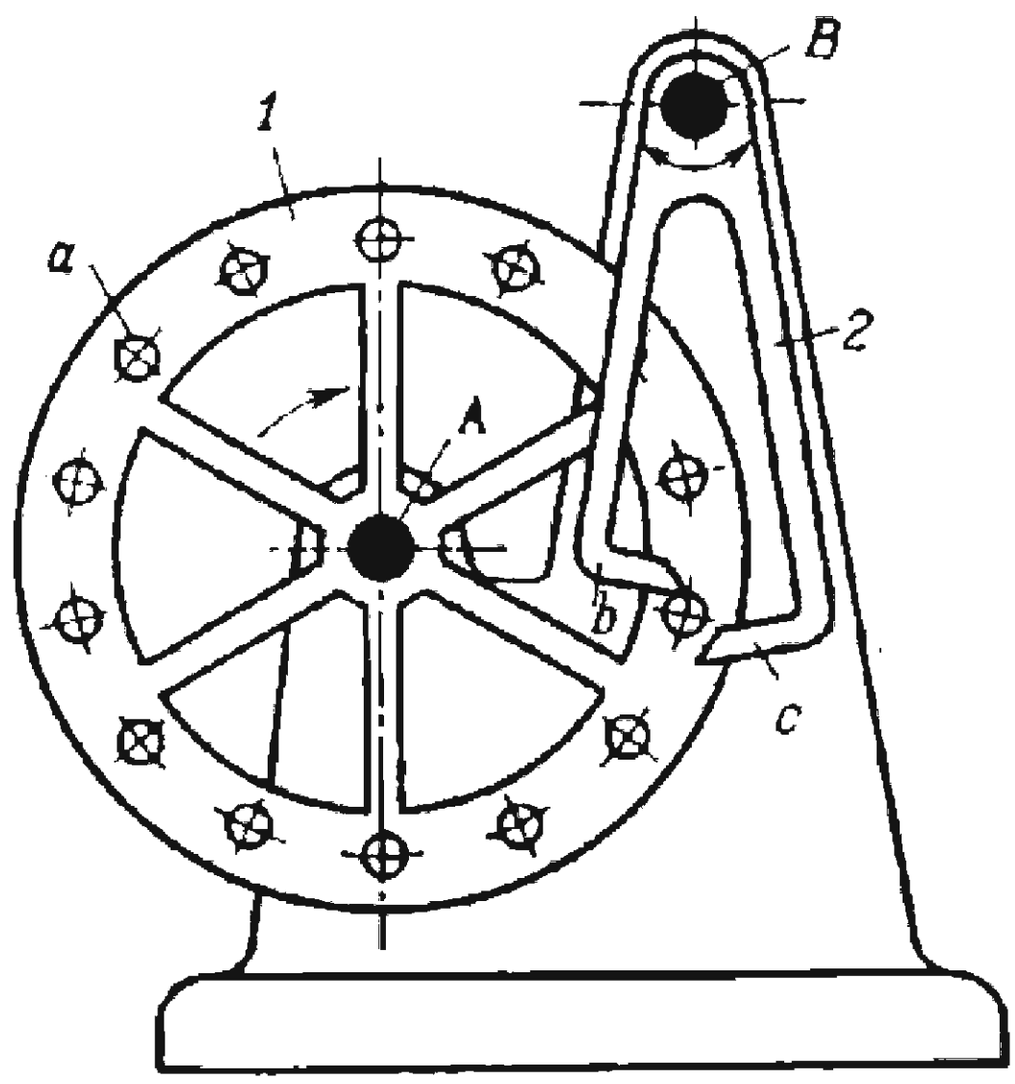

Pin wheel *1*, to which a constant torque is applied, carries pins *a* and rotates clockwise about fixed axis *A*. Double-ended pawl (anchor) *2* oscillates about fixed axis *B* and has two pallets, *b* and *c*, that alternately engage pins *a* of wheel *1*. When pawl *2* oscillates, wheel *1* rotates intermittently.

2686	FORKED-PAWL PIN-WHEEL RATCHET MECHANISM	RG 3L

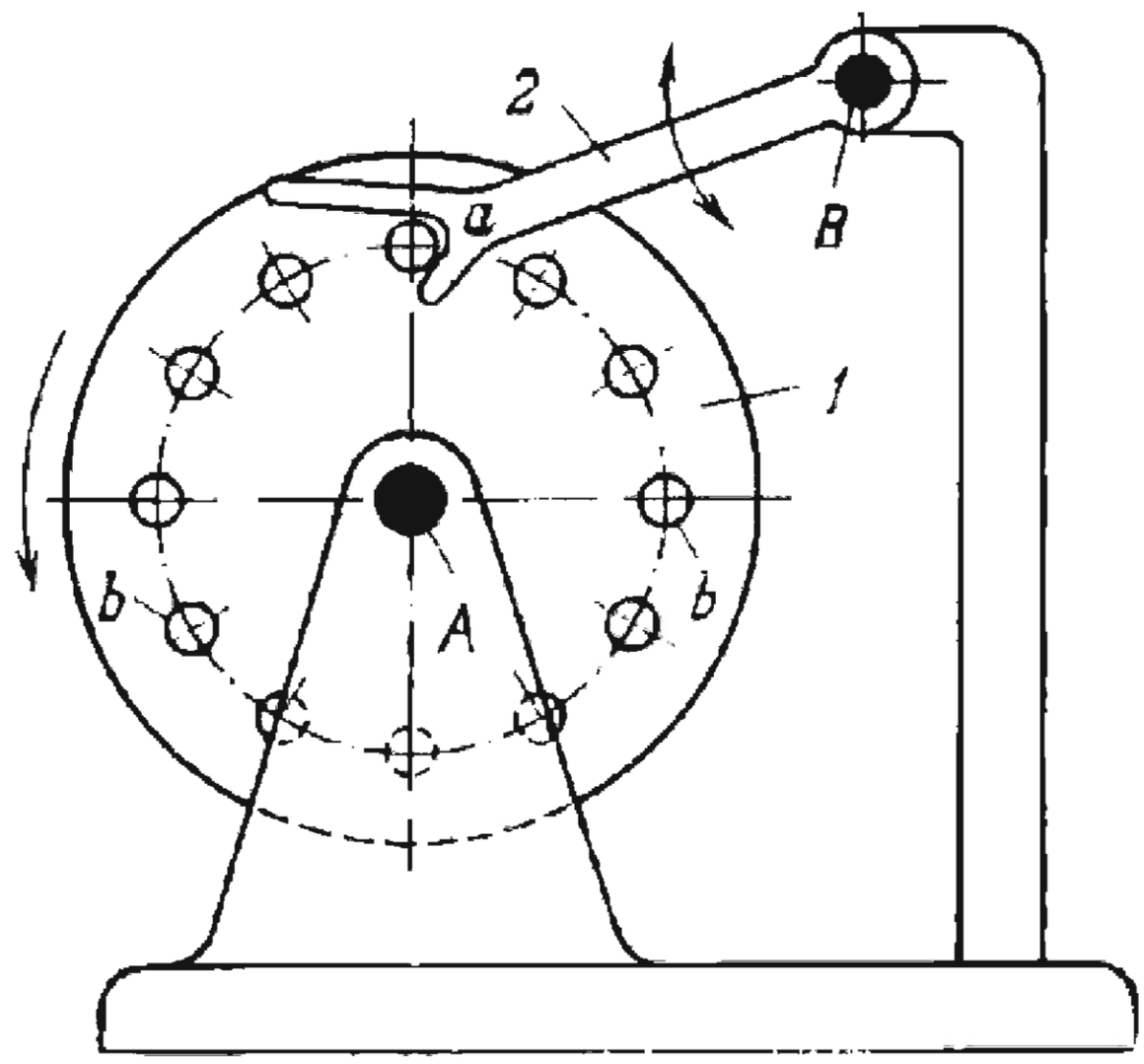

Pin wheel *1* carries pins *b* and rotates counterclockwise about fixed axis *A*. Forked pawl *2* turns about fixed axis *B* and has crotch *a* which engages pins *b* and prevents rotation of wheel *1* in the reverse direction.

2687	PIN-RACK REVERSIBLE-PAWL RATCHET MECHANISM	RG 3L

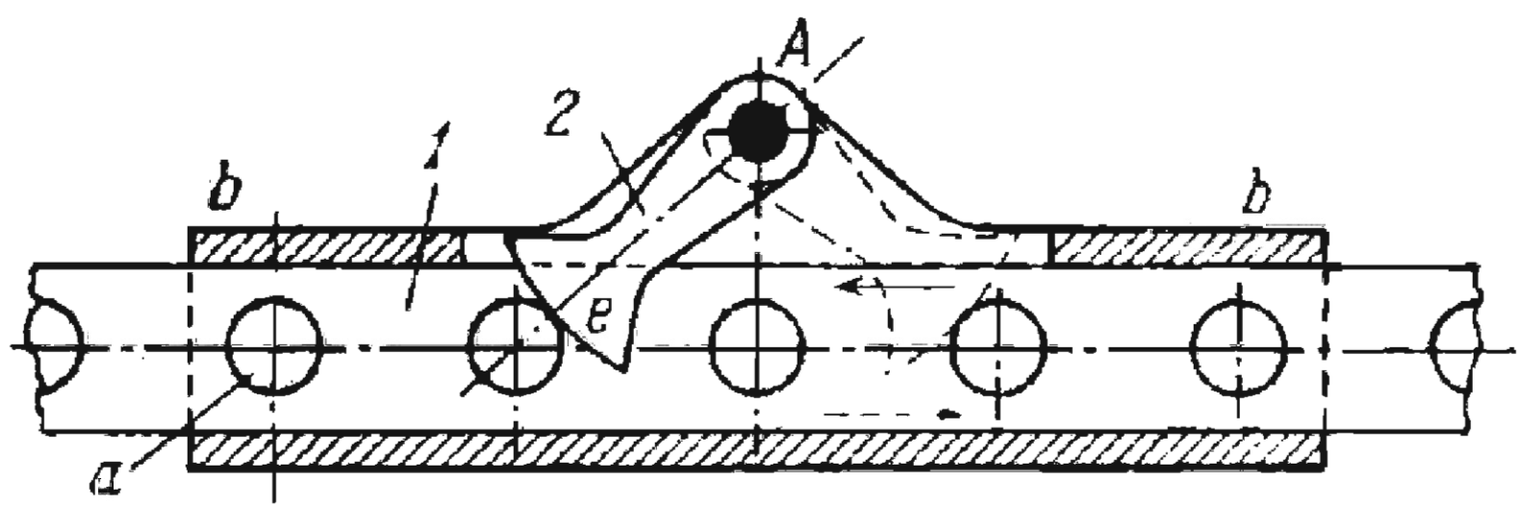

Pin rack *1* carries pins *a* and slides in fixed guides *b-b*. Reversible pawl *2* turns about fixed axis *A* and its operative surface *e*, which engages pins *a*, is along a circular arc drawn from centre *A*. Pawl *2* can be turned to the position shown by dash lines. In the first position the pawl allows rack motion only to the left; in the second position—only to the right.

2688	PIN-WHEEL RATCHET MECHANISM	RG 3L

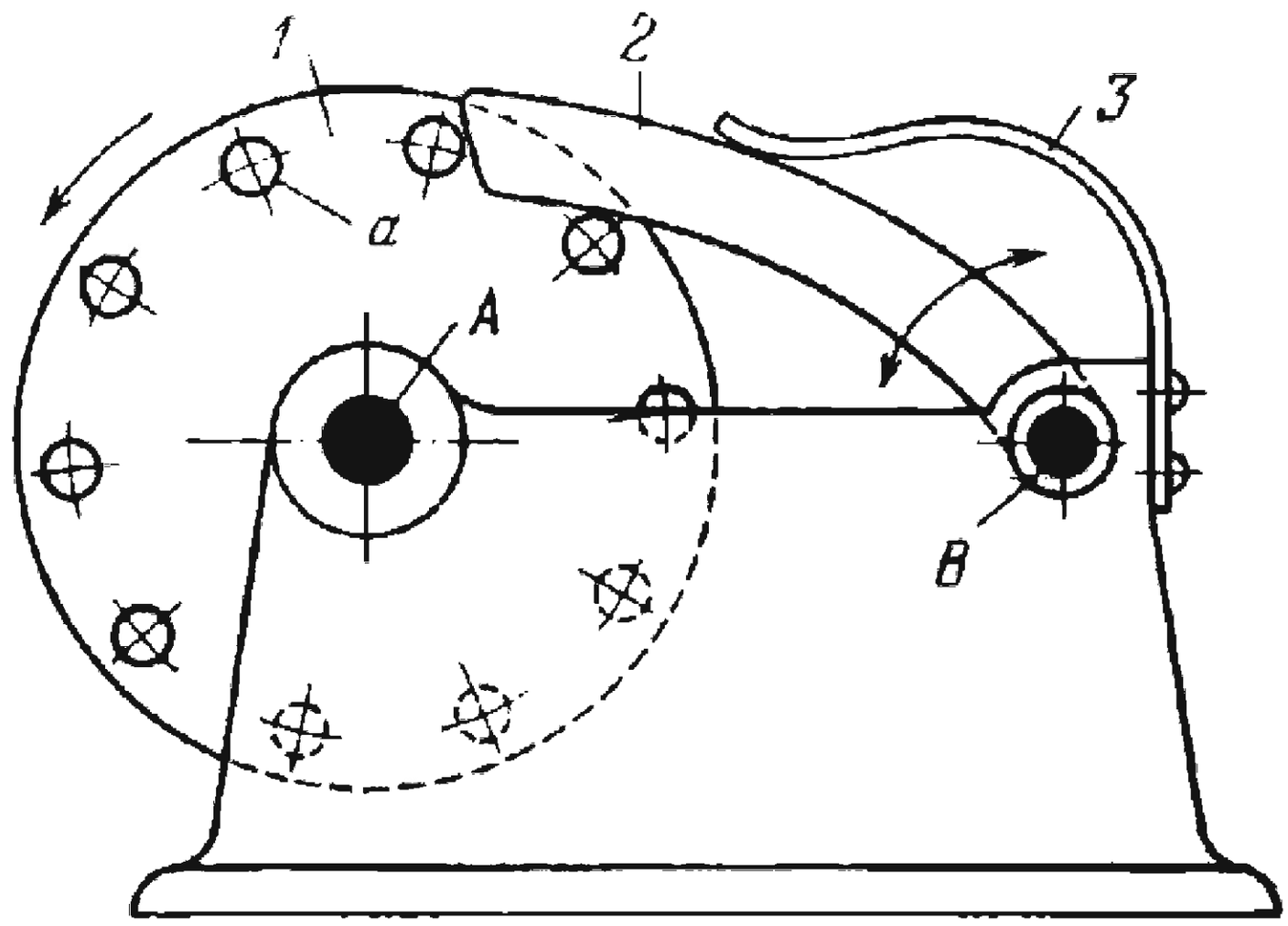

Pin wheel *1* carries pins *a* and rotates counterclockwise about fixed axis *A*. Pawl *2* turns about fixed axis *B* and is held by flat spring *3* in engagement with pins *a* of wheel *1*. For clockwise rotation of wheel *1* it is necessary to overcome the resistance of spring *3*.

2689	RACK-TYPE ESCAPEMENT MECHANISM	RG 3L

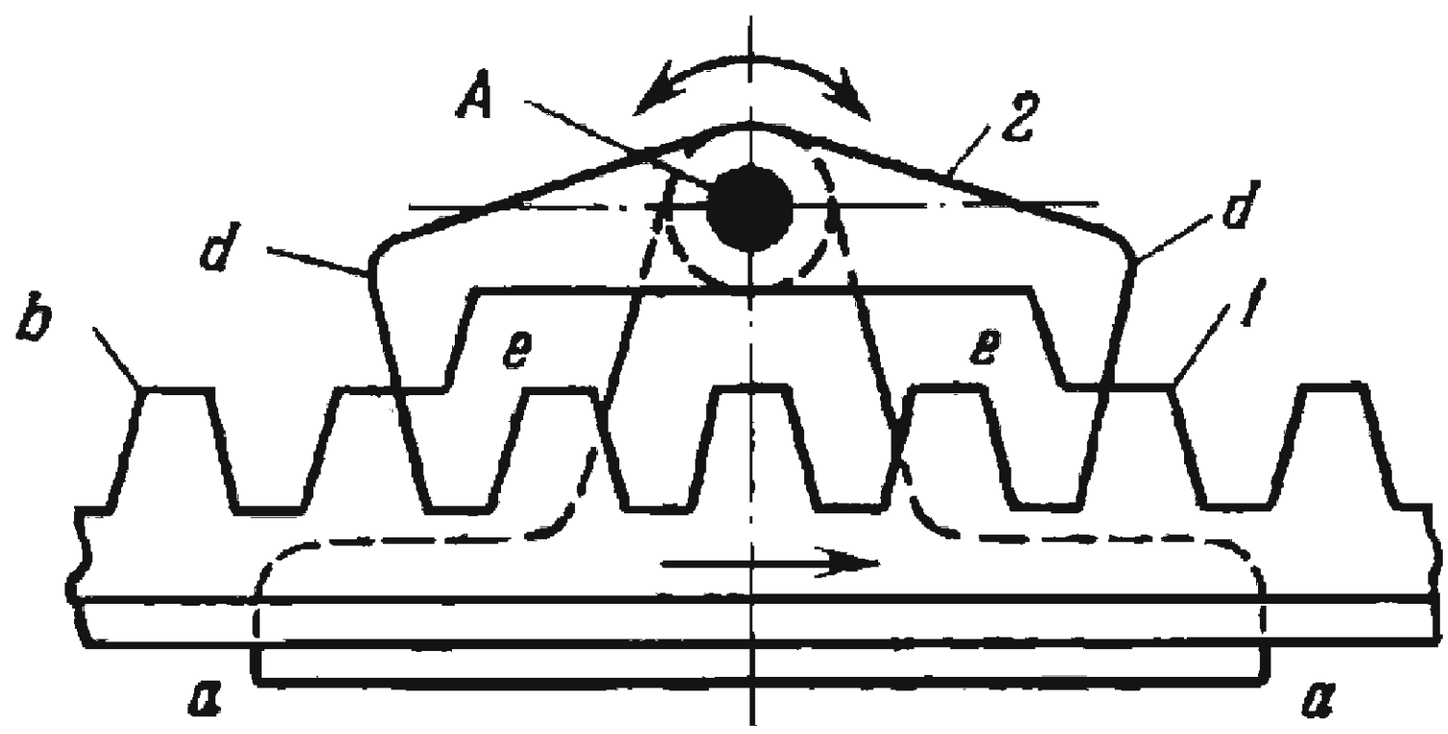

Rack *1* has trapezoidal teeth *b* and travels to the right along fixed guides *a-a*. Double-ended pawl *2* turns about fixed axis *A*. When pawl *2* oscillates, its pallets *d* alternately enter tooth spaces *e* of rack *1* which has intermittent translational motion.

2690	SLIDING-PAWL RACK-TYPE RATCHET MECHANISM	RG 3L

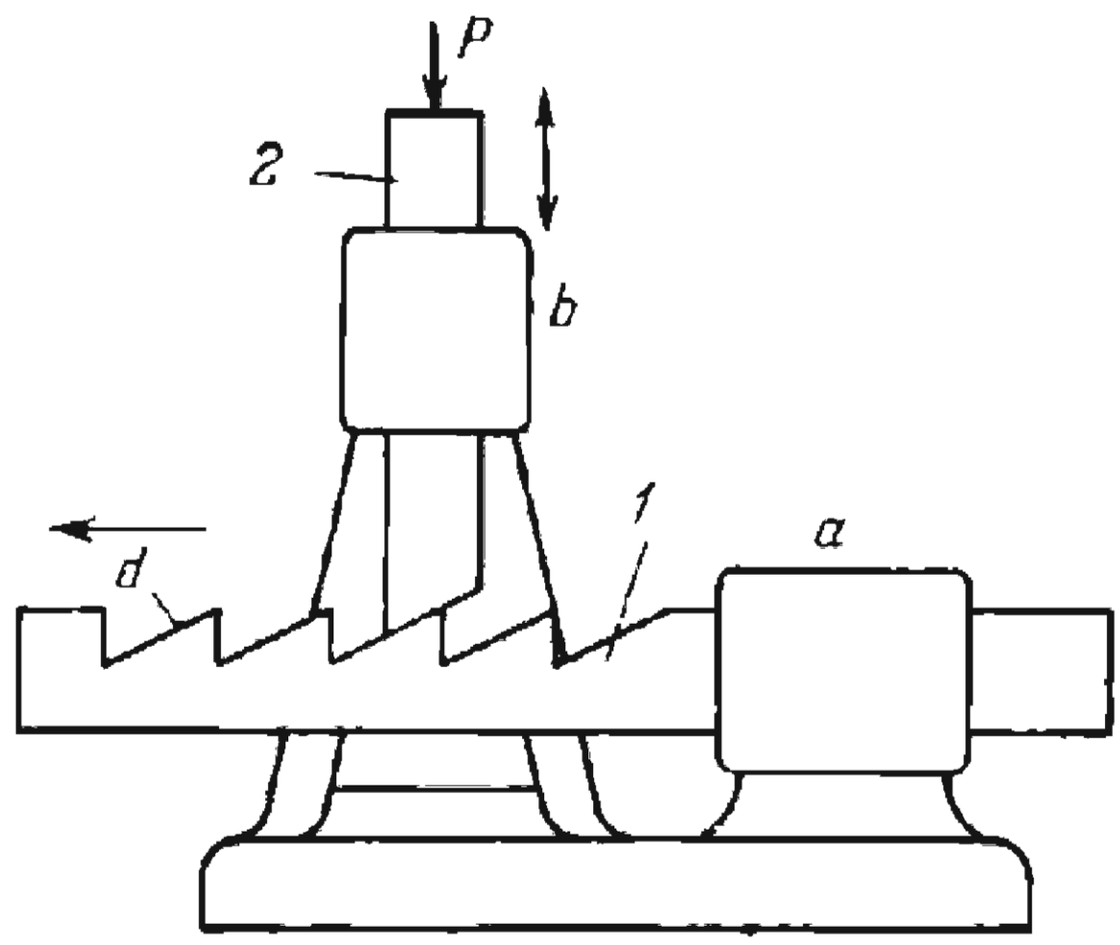

Ratchet-tooth rack *1* with teeth *d* slides in fixed guide *a* to the left. Prismatic pawl *2* slides in fixed guide *b* and is held in engagement with teeth *d* of rack *1* by force *P*. The pawl prevents motion of the rack in the reverse direction.

2691	LEVER-PAWL RATCHET MECHANISM	RG 3L

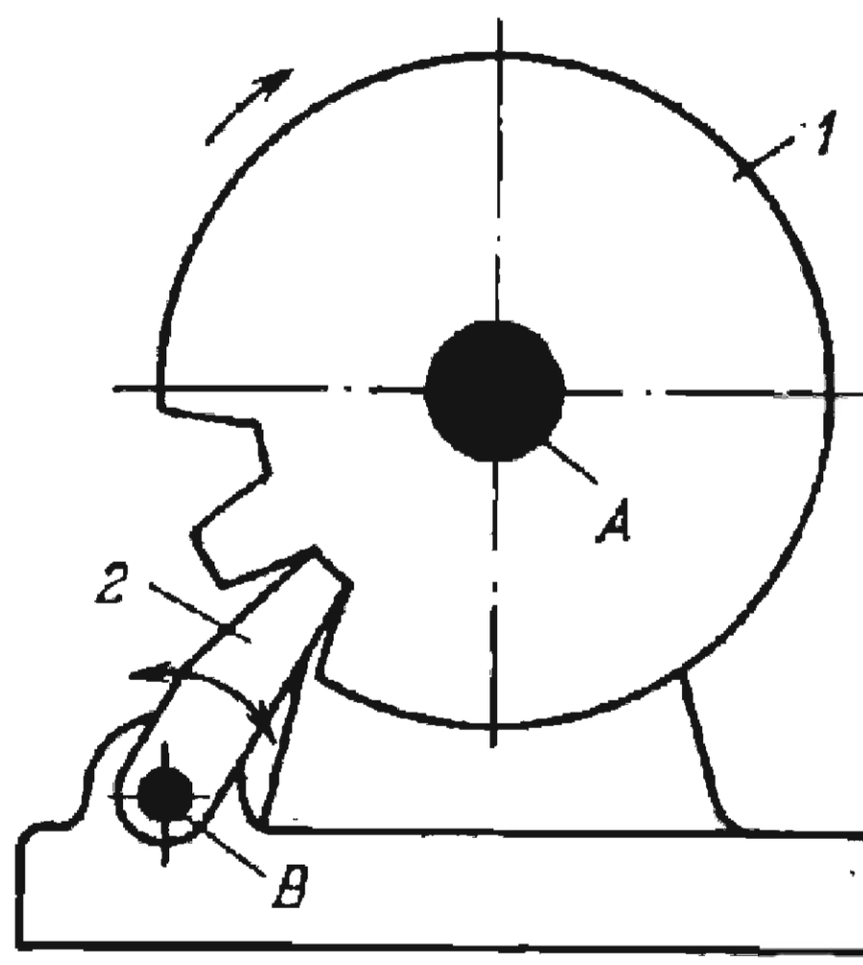

Ratchet wheel *1* rotates about fixed axis *A*. Lever-type pawl *2* turns about fixed axis *B*. When pawl *2* engages the teeth of wheel *1*, it allows wheel rotation only in the clockwise direction; otherwise the pawl jams.

2692	SLIDING-PAWL RATCHET MECHANISM	RG 3L

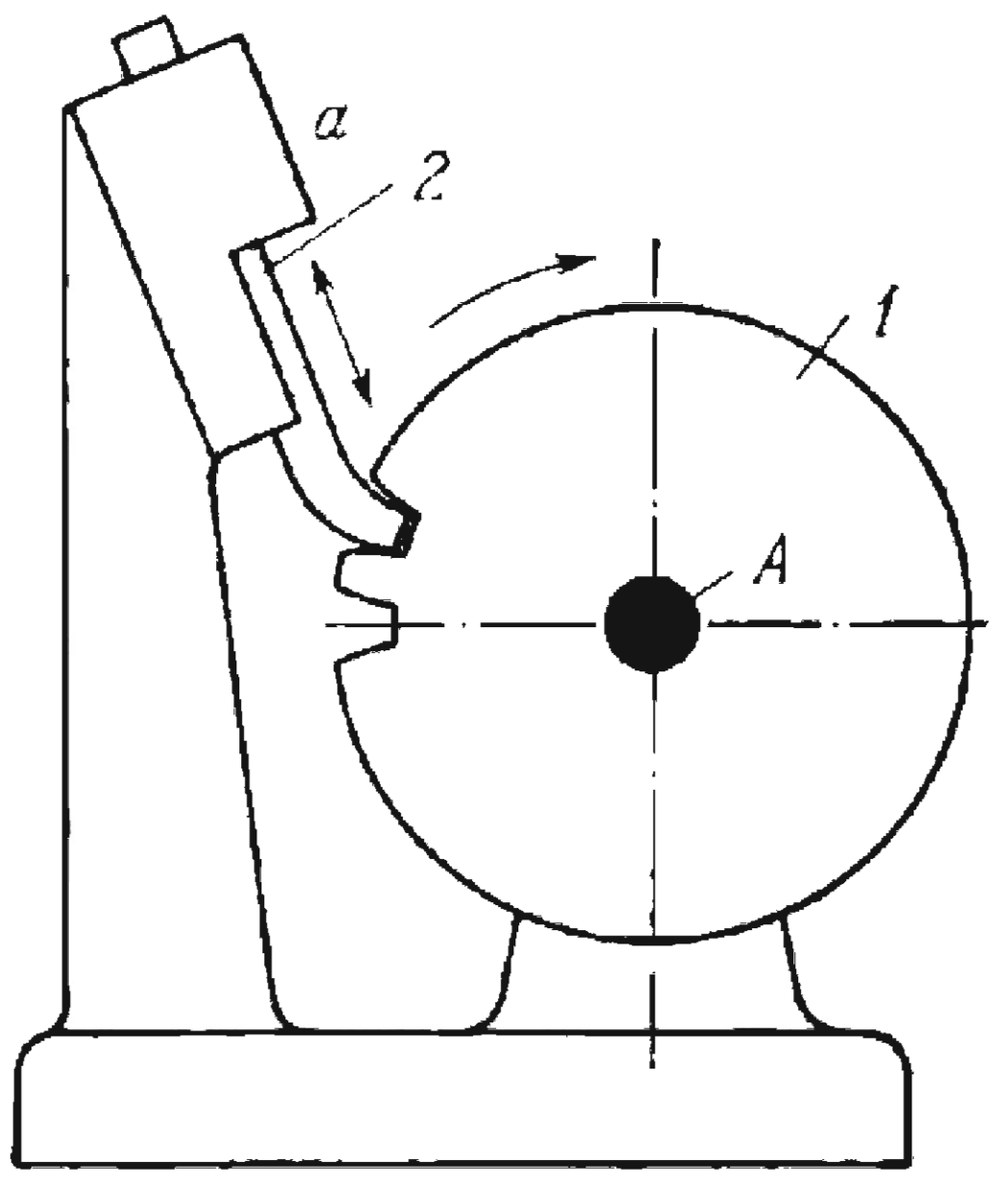

Ratchet wheel *1* rotates about fixed axis *A*. Prismatic pawl *2* slides in fixed guide *a*. When pawl *2* engages the teeth of wheel *1*, it allows wheel rotation only clockwise; otherwise the pawl jams.

2693	SPATIAL RATCHET MECHANISM WITH A FACE-TYPE RATCHET WHEEL	RG 3L

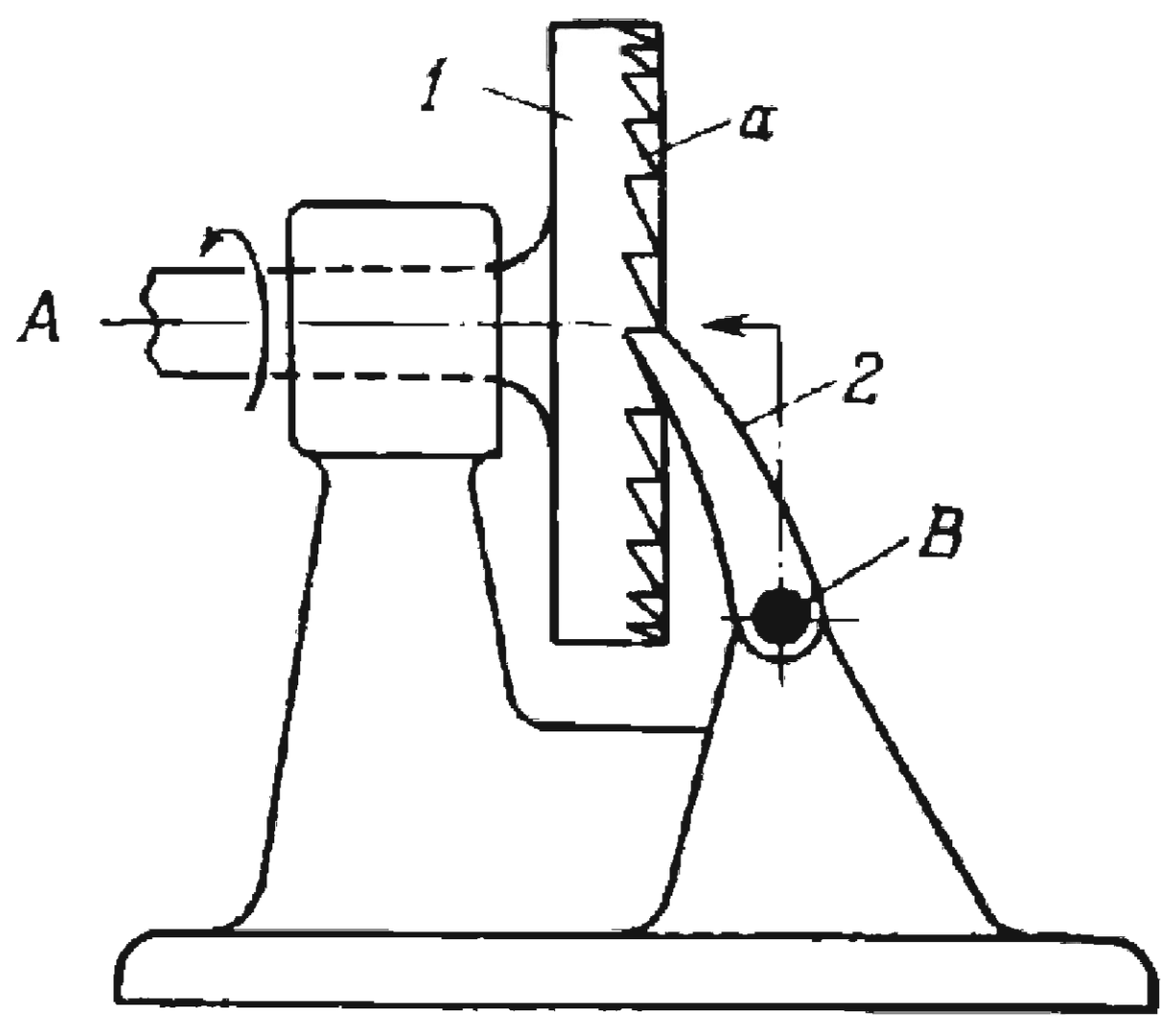

Face-type ratchet wheel *1* rotates about fixed axis *A* and has teeth *a* located on an end face. Pawl *2* turns about fixed axis *B*. Axes *A* and *B* are nonintersecting but are perpendicular to each other. Pawl *2* allows wheel rotation only in the direction of the arrow.

2694	TWO-WHEEL RATCHET MECHANISM	RG 3L

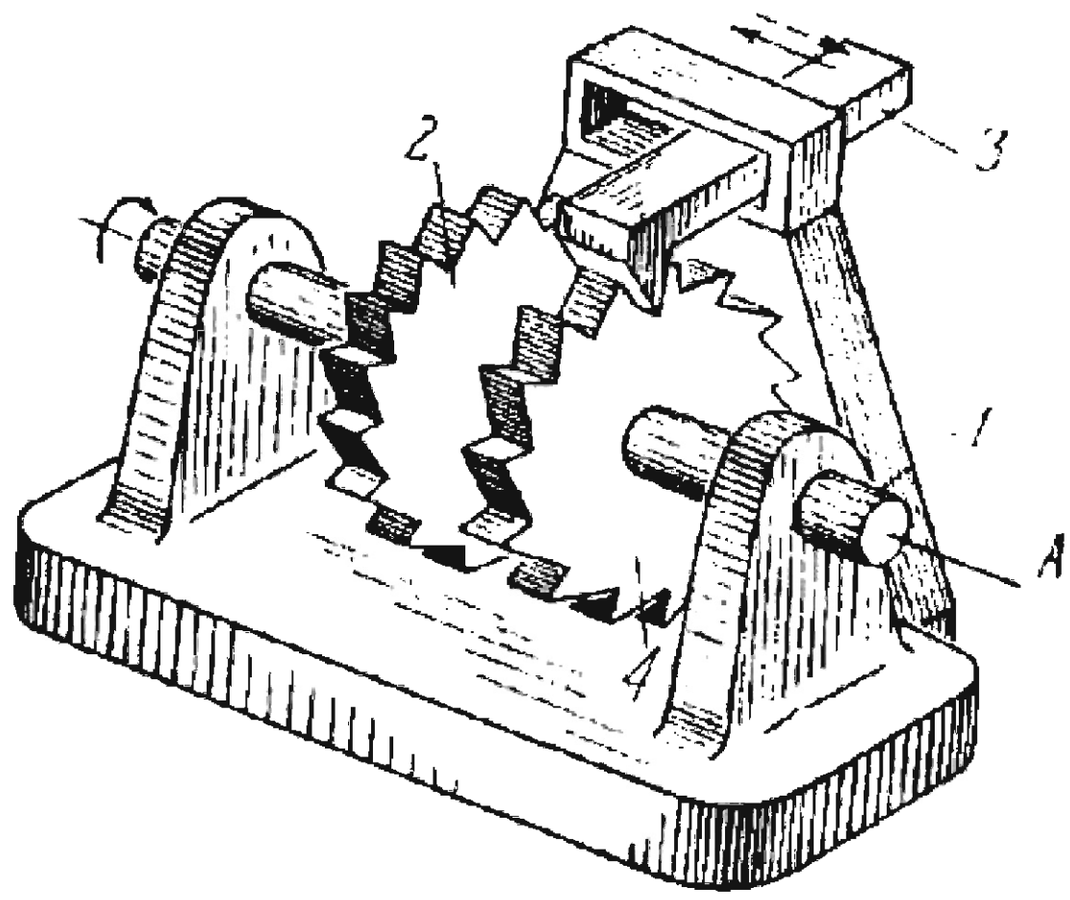

Ratchet wheels *2* and *4* are keyed on shaft *1* and rotate together about fixed axis *A*. The wheels have the same number of teeth but those on one wheel are shifted by one half pitch with respect to those on the other wheel. Pawl *3* can slide sideways, reciprocating so that it alternately engages the teeth of wheels *2* and *4*. As a result, shaft *1*, to which a constant torque is applied, rotates intermittently through angles corresponding to one half pitch of the teeth of wheels *2* and *4*.

2695	INTERNAL-TOOTH INTERNAL-PAWL RATCHET MECHANISM	RG 3L

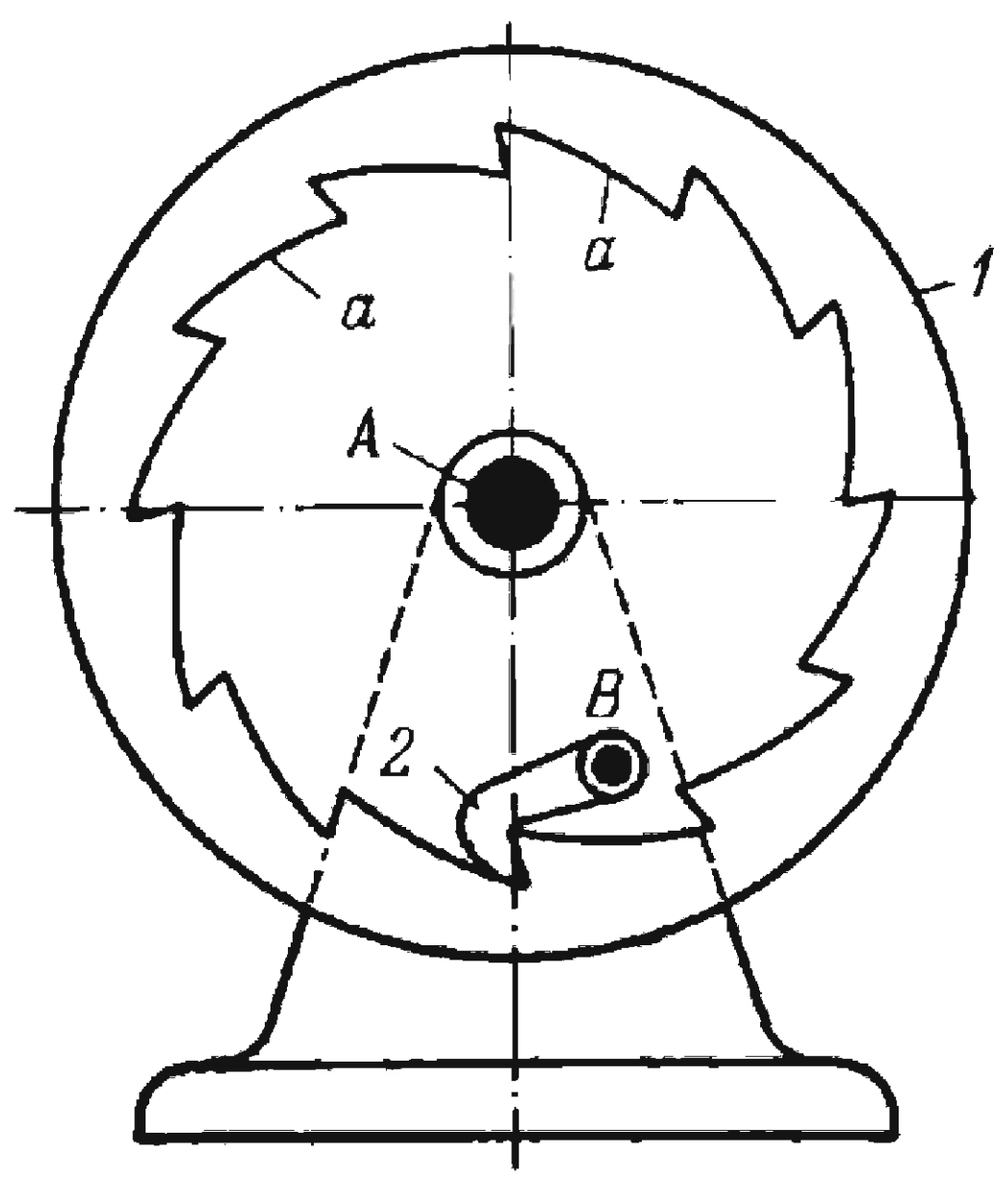

Ratchet wheel *1* rotates about fixed axis *A* and has teeth *a* located on its inside surface. Pawl *2* turns about fixed axis *B* and engages teeth *a* of wheel *1*, allowing wheel rotation only in the counterclockwise direction.

2696	SPECIAL-TOOTH RATCHET MECHANISM	RG 3L

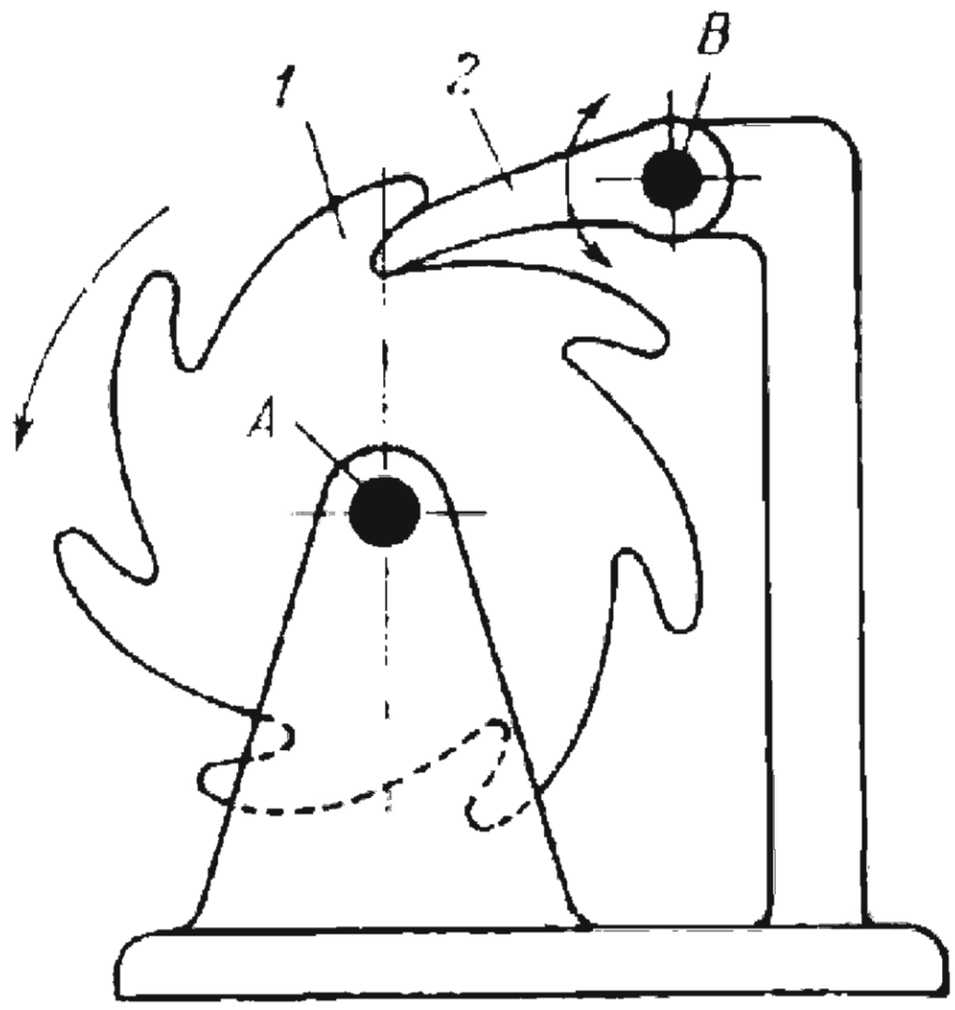

Ratchet wheel *1* rotates counterclockwise about fixed axis *A*. Pawl *2* turns about fixed axis *B*. Owing to the special shape of the teeth of wheel *1* it can turn back through a small angle after it turns one tooth in the counterclockwise direction.

2697	INTERNAL-TOOTH EXTERNAL-PAWL RATCHET MECHANISM	RG 3L

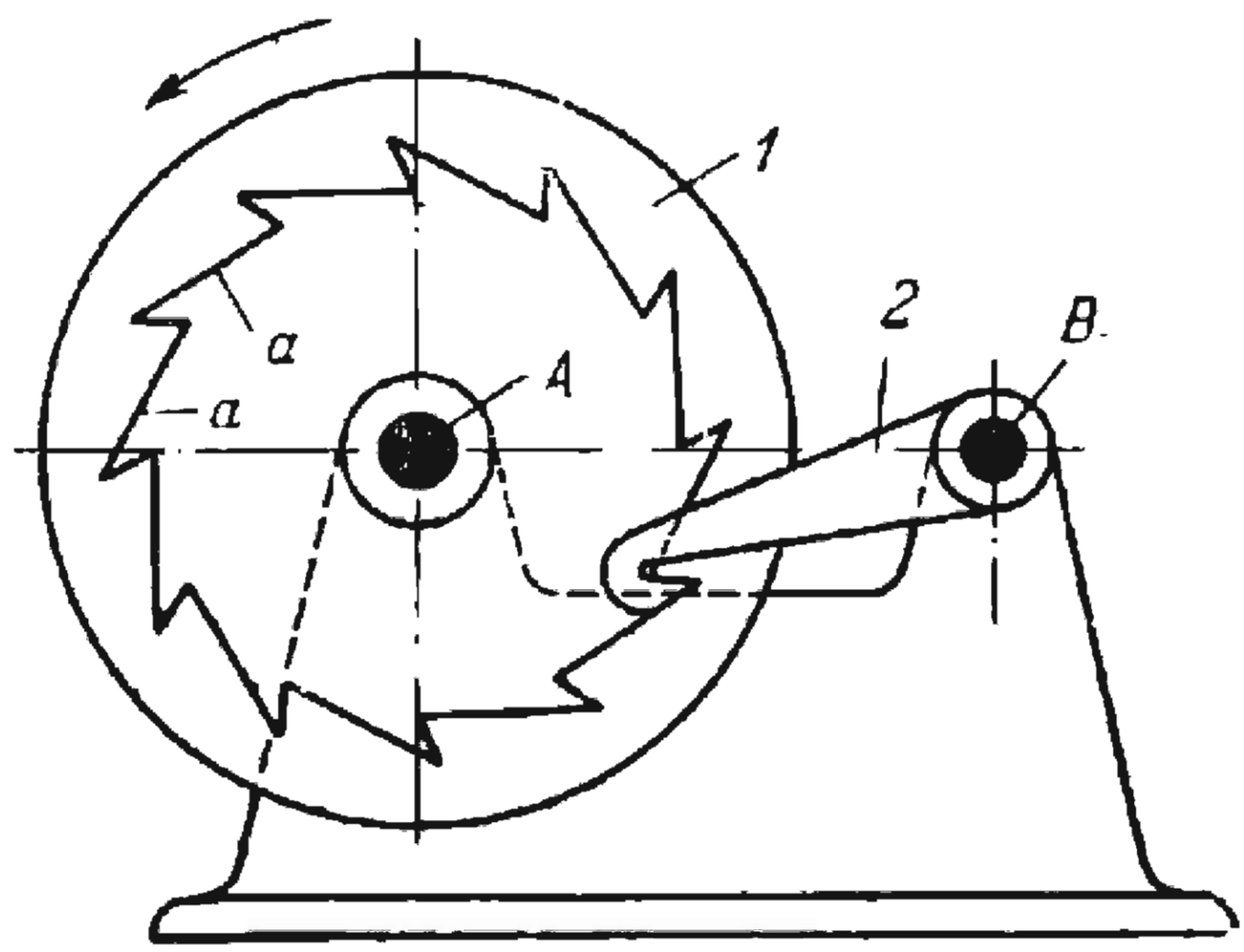

Ratchet wheel *1* rotates about fixed axis *A* and has teeth *a* located on its inside surface. Pawl *2* turns about fixed axis *B*, located outside of wheel *1*, and engages teeth *a* of the wheel, allowing its rotation only in the counterclockwise direction.

2698	RACK-TYPE RATCHET MECHANISM WITH COMPLEX PAWL MOTION	RG 4L

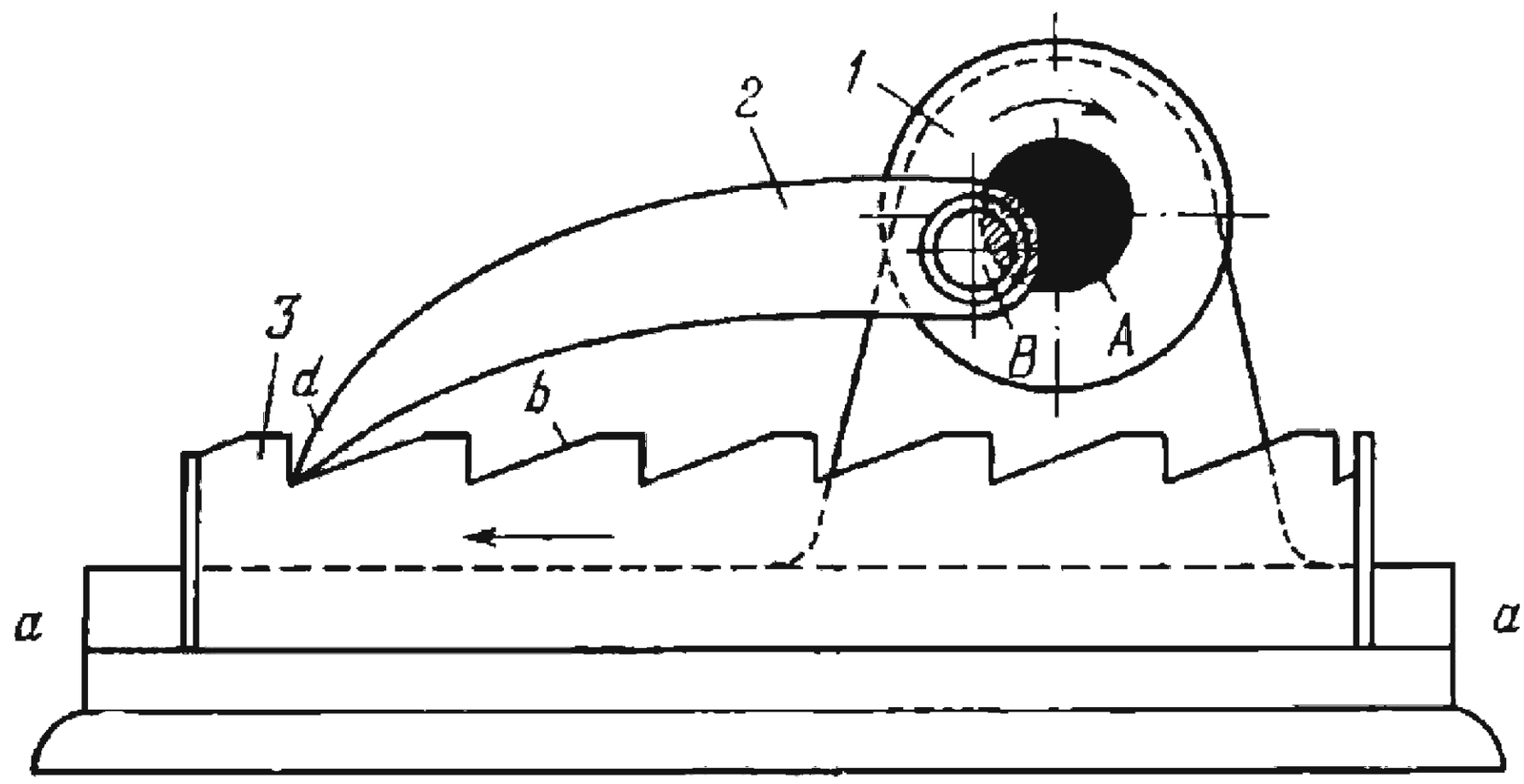

Link *1* rotates about fixed axis *A* and is connected by turning pair *B* to pawl *2* which engages rack *3*. Rack *3* slides along fixed guides *a-a*. When link *1* rotates, pawl *2* has a complex motion and its tip *d* engages teeth *b* of rack *3*, moving the rack intermittently to the left.

2699	SILENT RATCHET MECHANISM	RG 4L

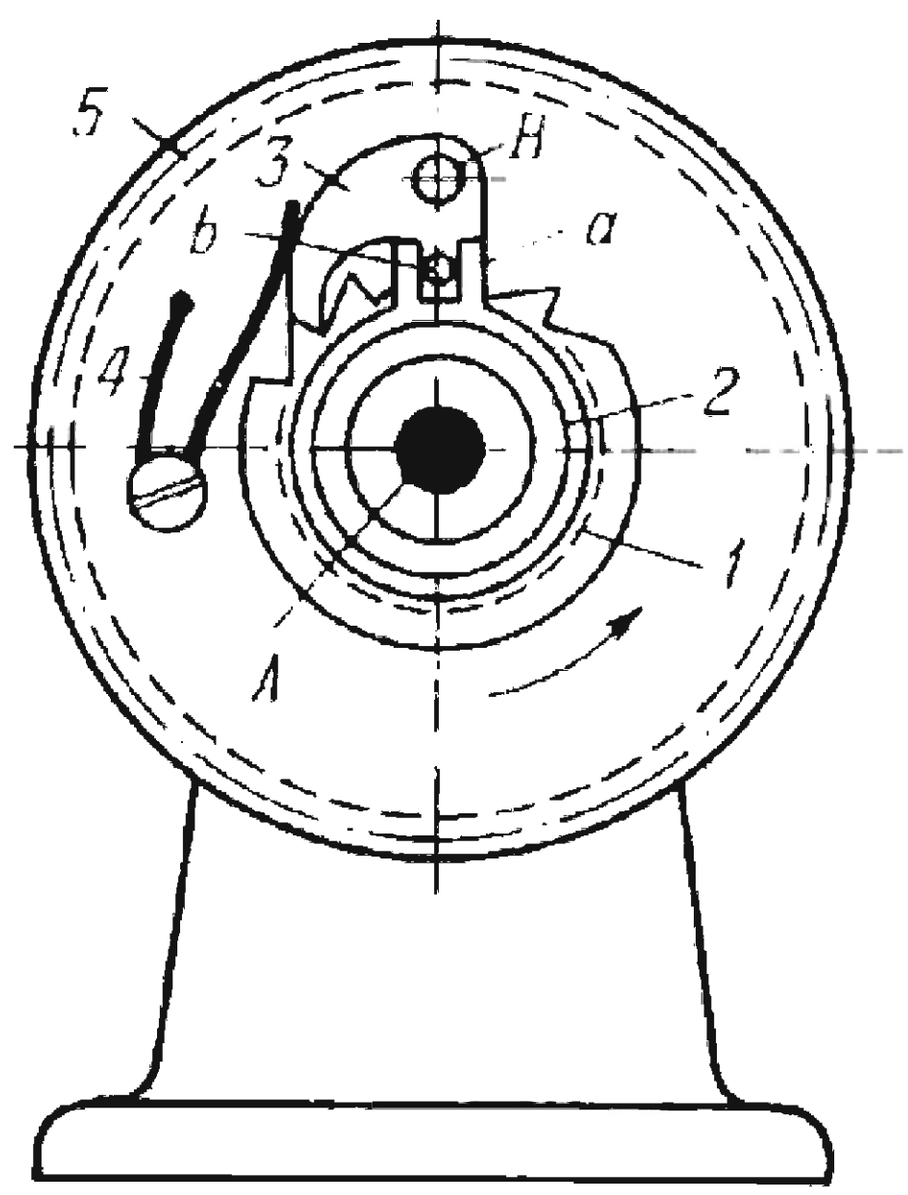

Gear *5* rotates about fixed axis *A* and carries pawl *3* which turns about axis *B* and has pin *b*. Ring *2* is mounted with some friction on the hub of ratchet wheel *1* and has lugs *a*. When ratchet wheel *1* turns counterclockwise, a lug *a* engages pin *b* to lift pawl *3* thereby reducing the clicking noise made when a pawl slides over ratchet teeth. When ratchet wheel *1* turns clockwise, spring *4* holds pawl *3* in engagement with the teeth of wheel *1*.

2700 VARIABLE-MOTION RATCHET MECHANISM

RG 4L

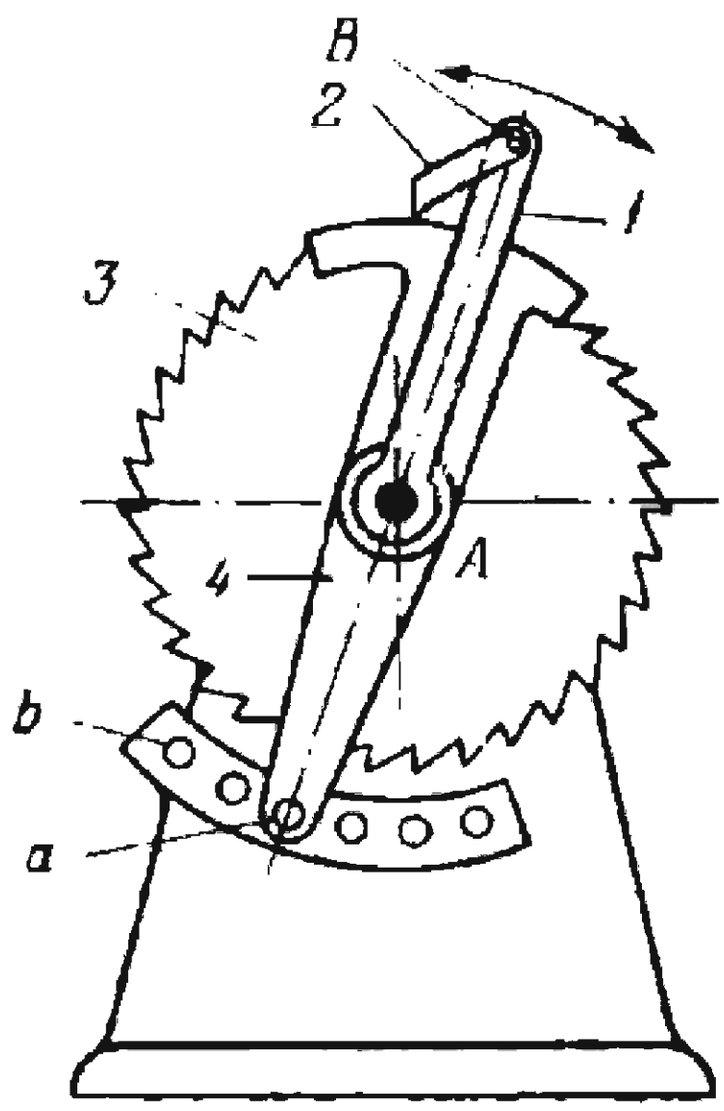

Lever *1* oscillates about fixed axis *A* through a constant angle. Pawl *2* is connected by turning pair *B* to lever *1* and engages the teeth of ratchet wheel *3*, turning it intermittently counterclockwise about axis *A*. Mask, or shield, *4* turns about axis *A* and shields a number of teeth of ratchet wheel *3*, lifting pawl *2* out of engagement for a part of its stroke. The angle of rotation of ratchet wheel *3* to each stroke of lever *1* can be varied by turning shield *4* to cover more or less teeth in the path of pawl *2*. Shield *4* is held in the adjusted position by pin *a* which enters the required hole *b* in a fixed plate.

2701 PUSH-BUTTON RATCHET MECHANISM

RG 4L

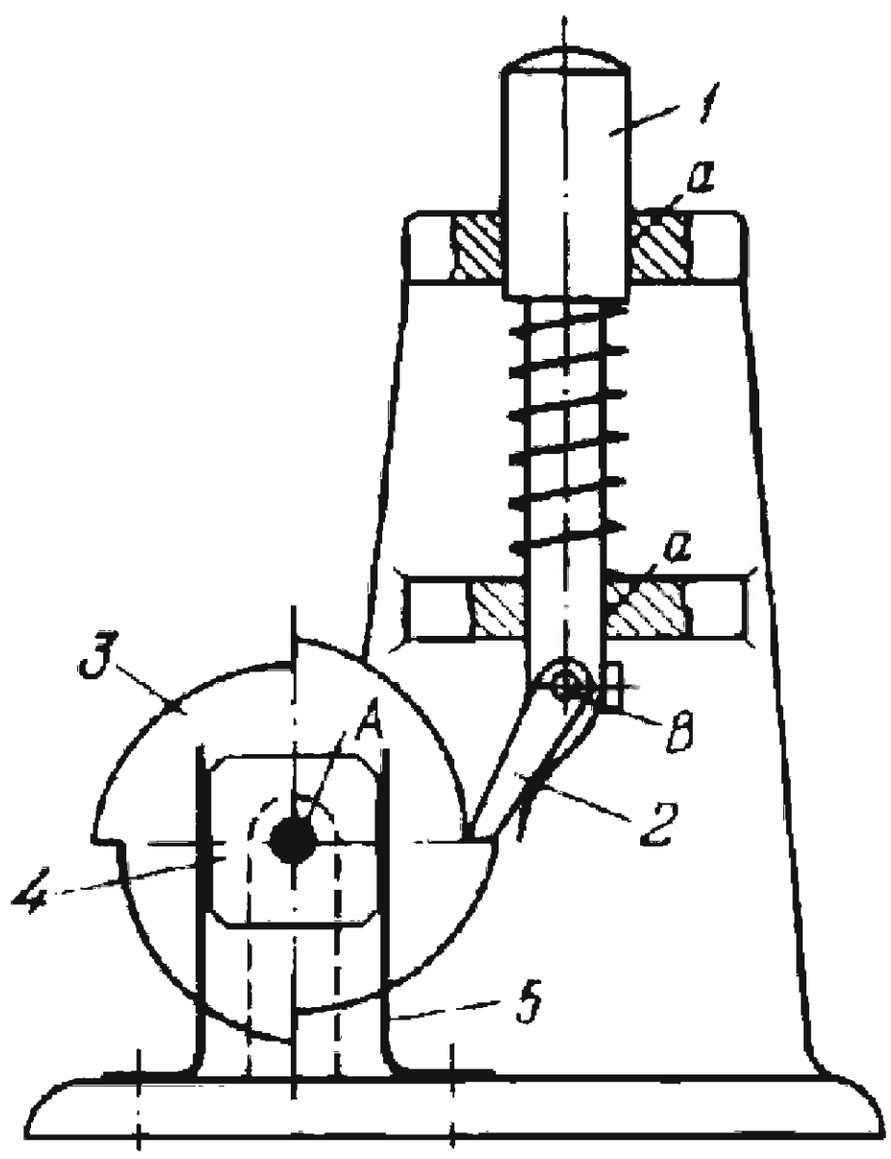

Push-button *1* slides in fixed guides *a-a* and is connected by turning pair *B* to pawl *2* which engages the teeth of four-tooth ratchet wheel *3*. Ratchet wheel *3* rotates about fixed axis *A* and is rigidly attached to (or integral with) square link *4*. When push-button *1* is pressed, ratchet wheel *3* is turned 90°. Flat springs *5* engage the sides of link *4* to hold the ratchet wheel in each indexed position.

2702	FORK-TYPE ESCAPEMENT MECHANISM	RG 4L

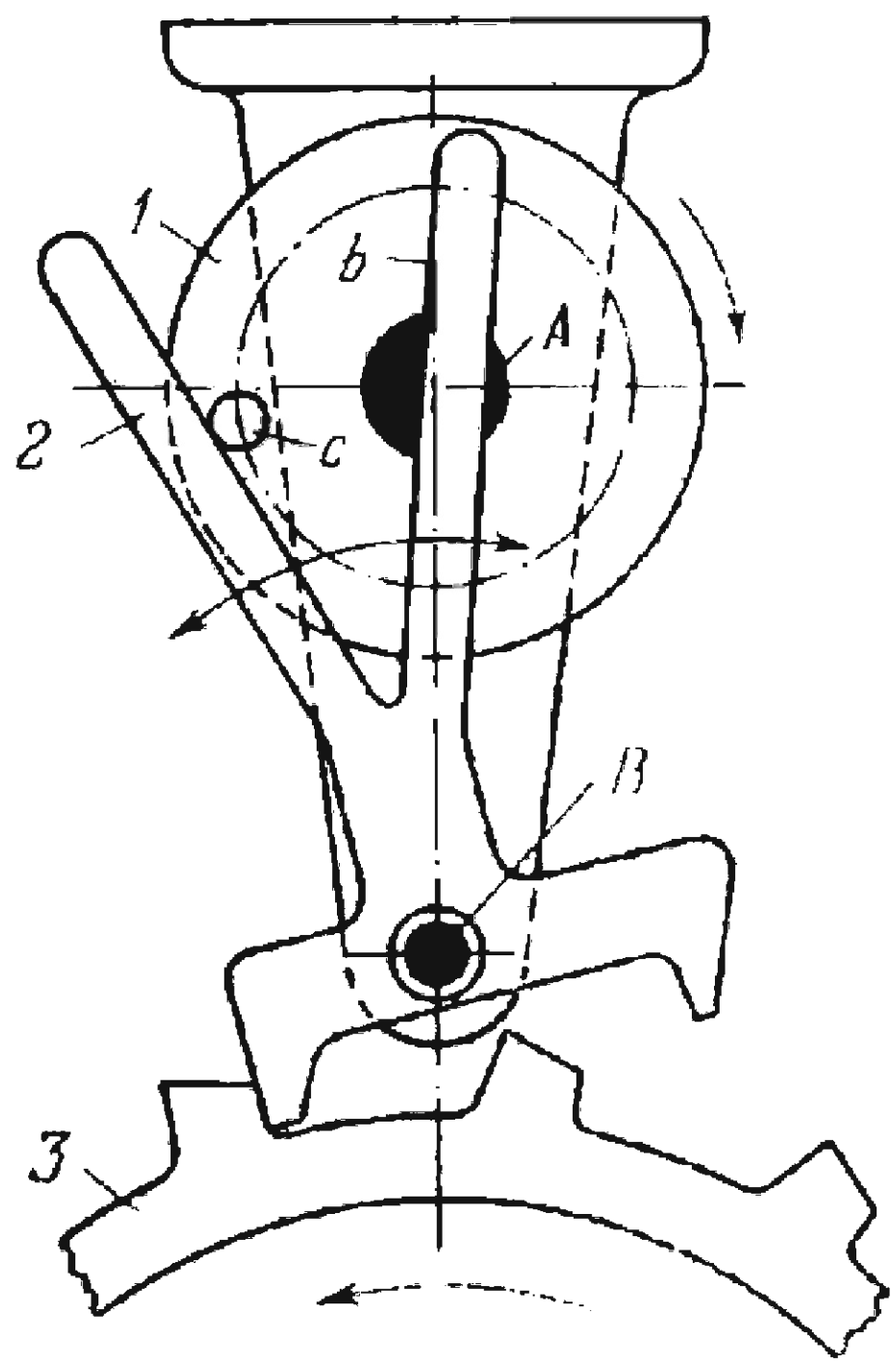

Disk *1* rotates about fixed axis *A* and carries pin *c* which alternately engages the legs *b* of fork-type pawl (anchor) *2*. When disk *1* rotates, pawl *2* oscillates about fixed axis *B* and ratchet (escape) wheel *3*, to which a constant torque is applied, rotates intermittently.

2703	ESCAPEMENT MECHANISM	RG 4L

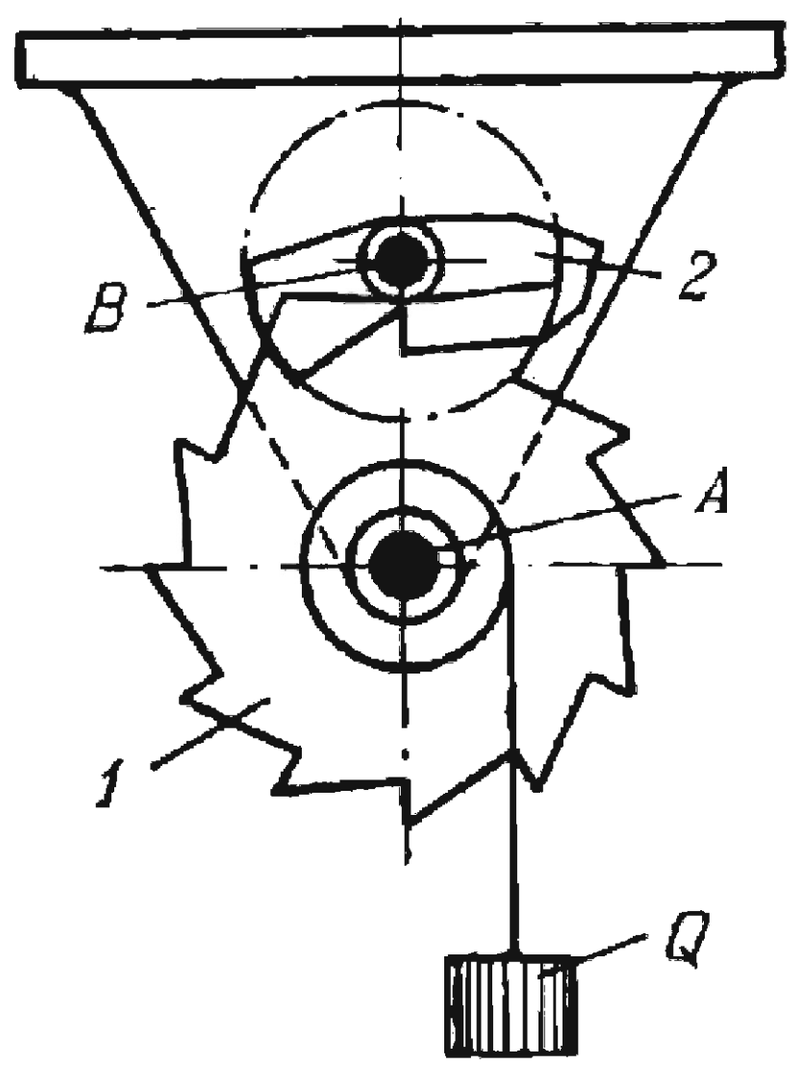

When double-ended pawl (anchor) *2* oscillates about fixed axis *B*, ratchet (escape) wheel *1*, to which a constant torque is applied by weight *Q*, rotates intermittently, one tooth at a time, about fixed axis *A*.

2704	REVERSIBLE RECIPROCATING-PAWL RATCHET MECHANISM	RG 4L

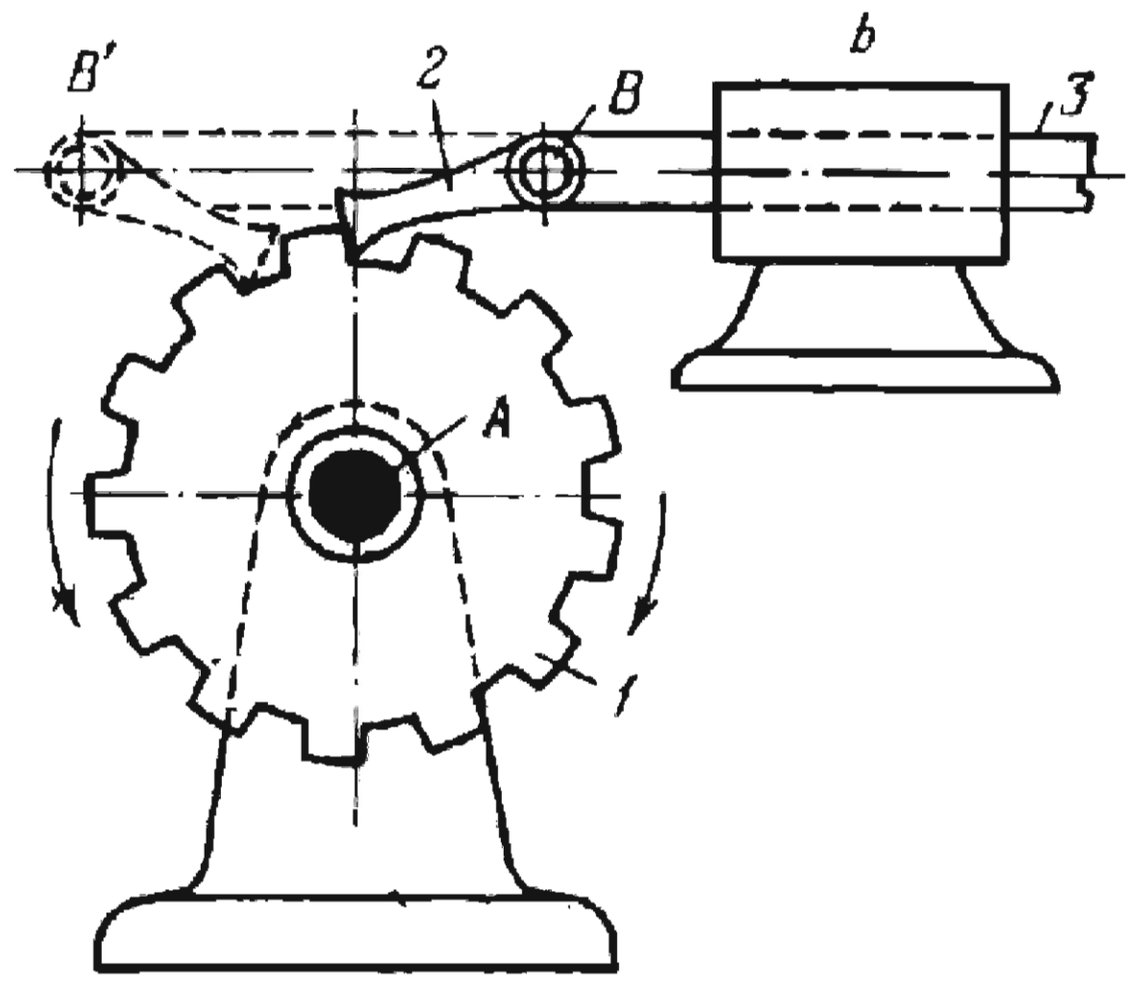

Ratchet wheel *1* rotates about fixes axis *A*. Reversible pawl *2* is connected by turning pair *B* to link *3* which reciprocates in fixed guide *b*. Pawl *2* rotates wheel *1* intermittently; the direction of rotation depends upon the position of pawl *2* (as at *B* or *B'*).

2705	REVERSIBLE-PAWL RATCHET MECHANISM	RG 4L

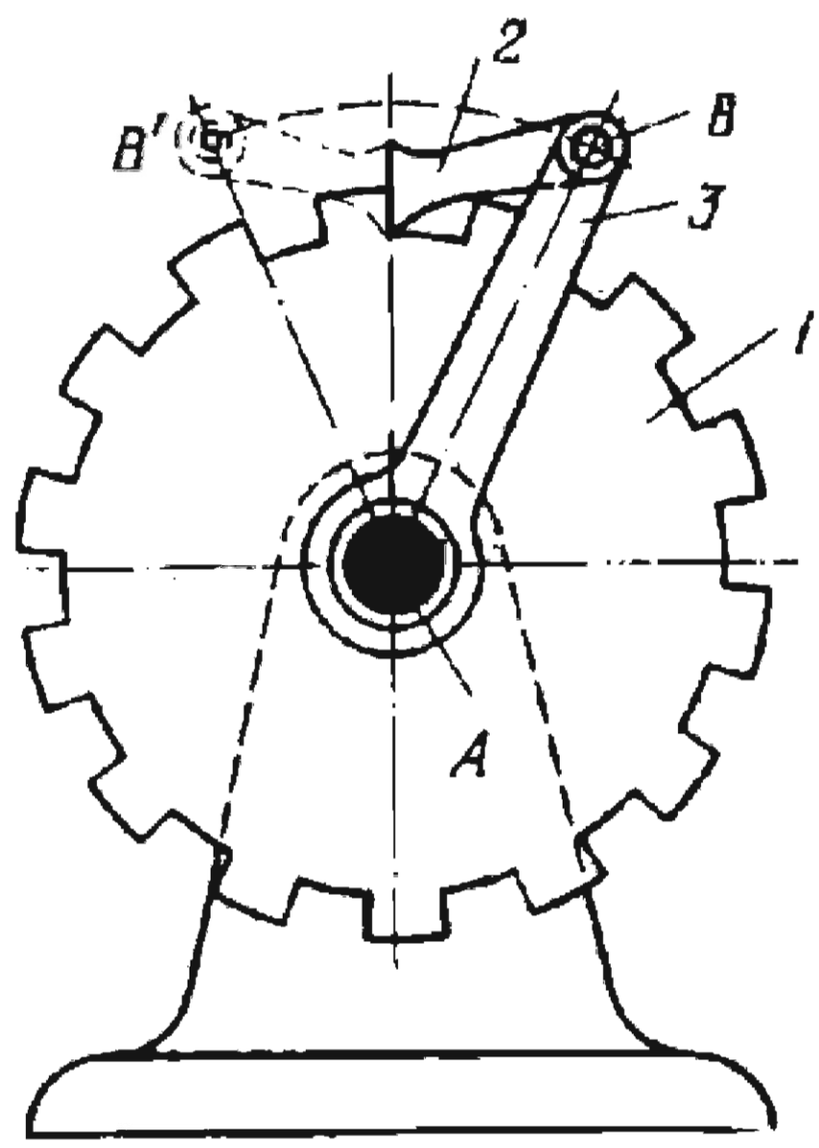

Ratchet wheel *1* rotates about fixed axis *A*. Reversible pawl *2* is connected by turning pair *B* to lever *3* which oscillates about axis *A*. Pawl *2* rotates wheel *1* intermittently; the direction of rotation depends upon the position of pawl *2* (as at *B* or *B'*).

2706	ROLLER-PAWL PIN-WHEEL RATCHET MECHANISM	RG 4L

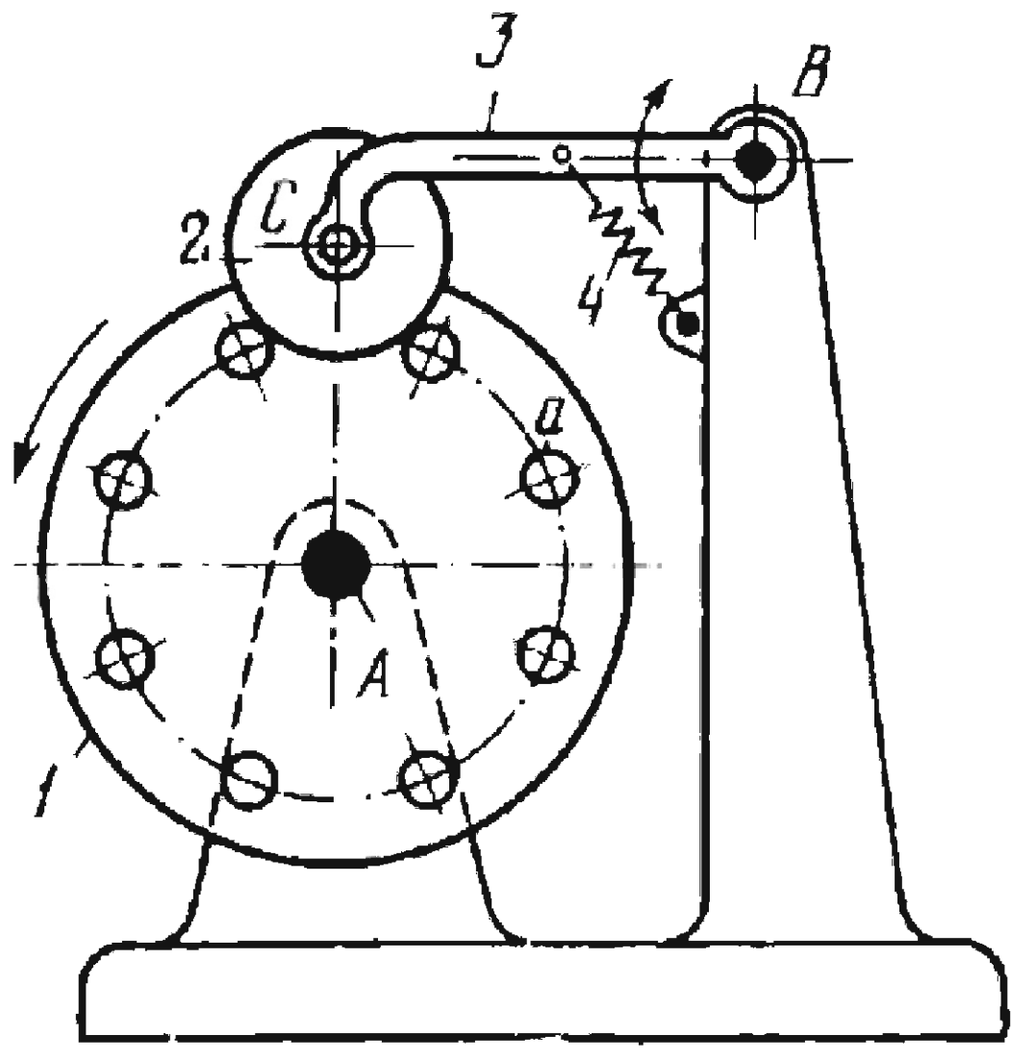

Pin wheel *1* carries pins *a* and rotates counterclockwise about fixed axis *A*. Pawl *3* turns about fixed axis *B* and is connected by turning pair *C* to roller *2* which is held against the pins of wheel *1* by spring *4*. Wheel *1* can rotate in either direction when the torque applied to it overcomes the resistance of spring *4*.

2707	SHAPED-PAWL PIN-WHEEL RATCHET MECHANISM	RG 4L

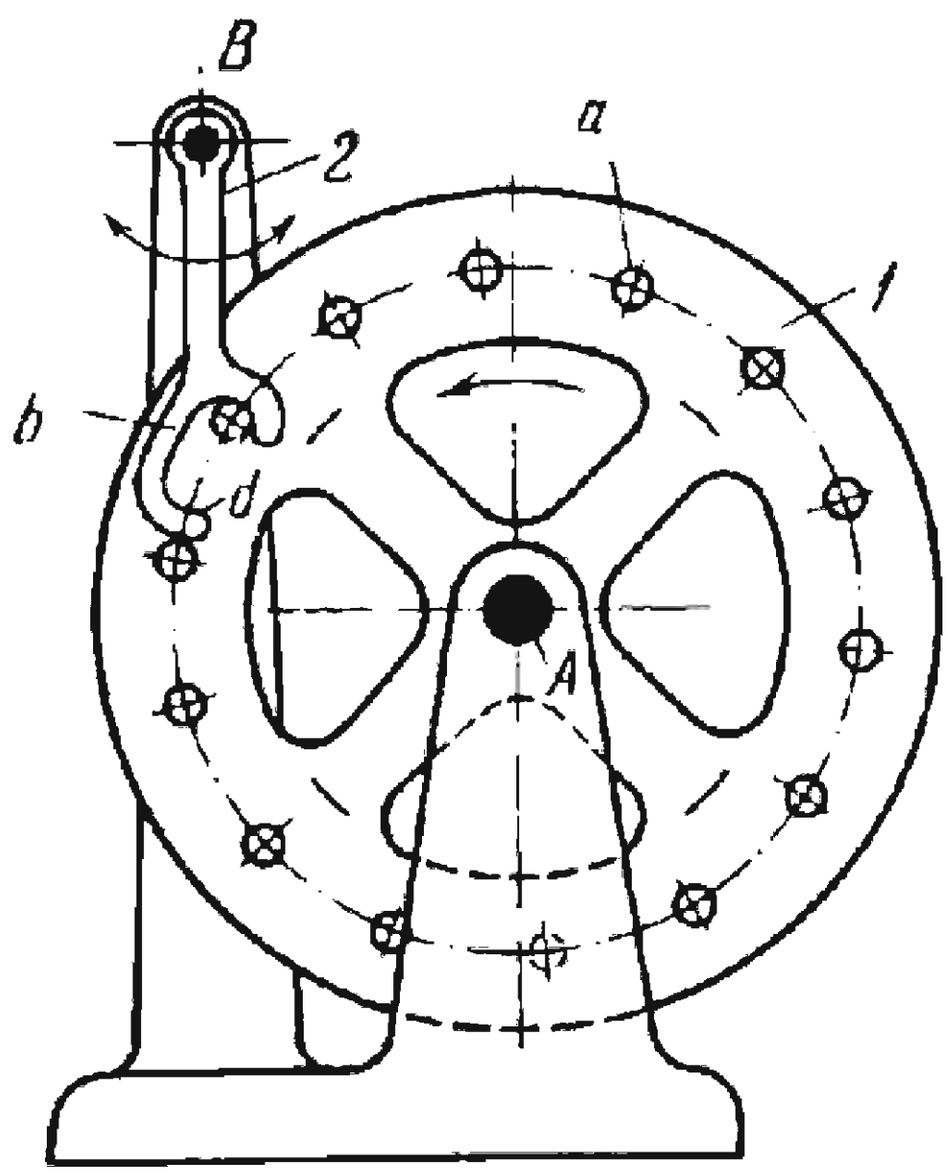

Pin wheel *1*, to which a constant torque is applied, carries pins *a* and rotates counterclockwise about fixed axis *A*. Shaped pawl *2* with recess *b* oscillates freely about fixed axis *B*. When pawl *2* oscillates, wheel *1* rotates intermittently.

2708	DOUBLE-PAWL RATCHET MECHANISM	RG 4L

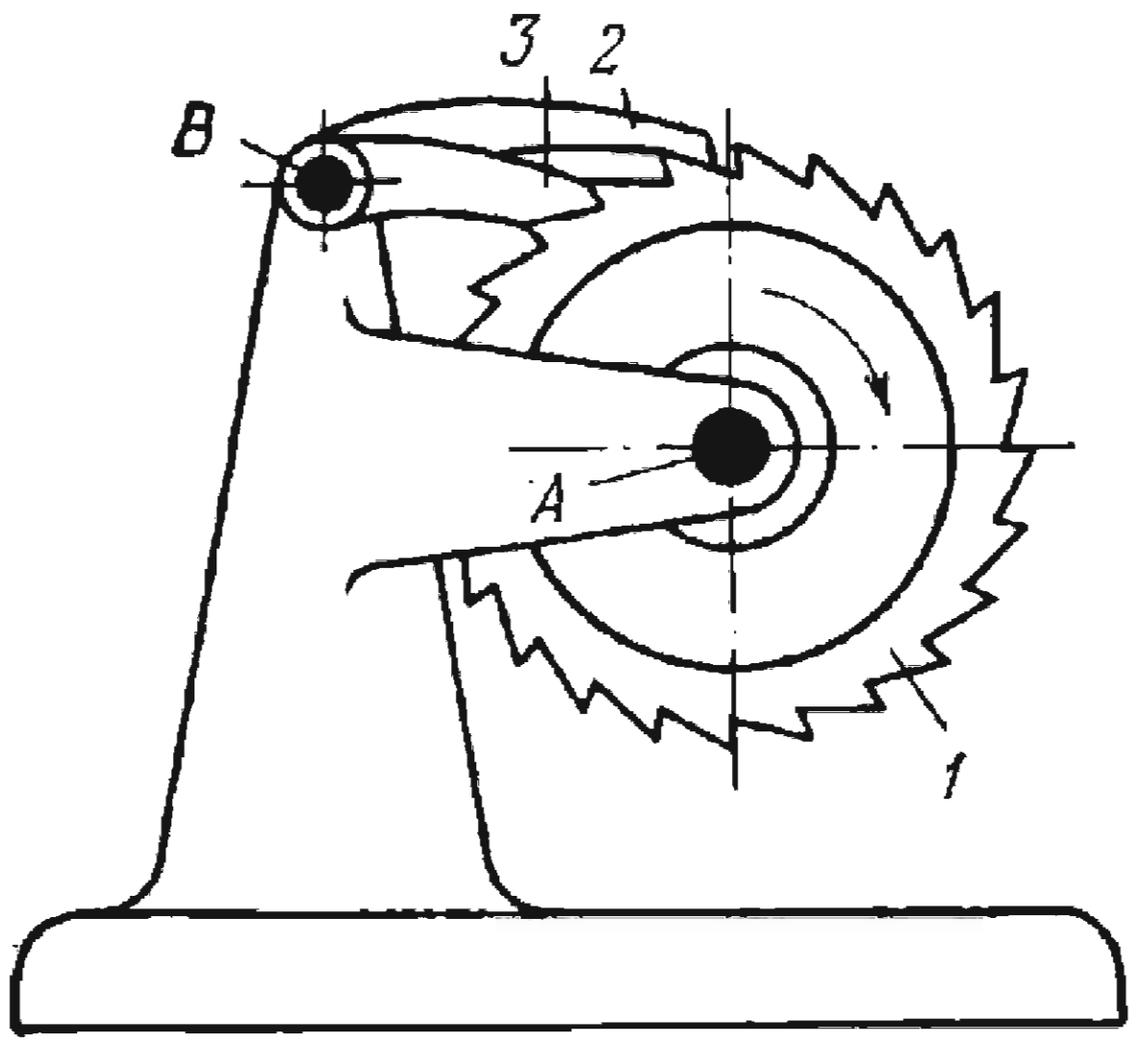

Ratchet wheel *1* rotates clockwise about fixed axis *A*. Pawls *2* and *3* turn about fixed axis *B*. Pawl *2* is longer than pawl *3* by one half or one and a half pitches ($1^1/_2$ as shown) of ratchet wheel *1*. The pawls prevent reverse rotation of wheel *1* by more than one half pitch. The provision of two pawls is equivalent to doubling the number of teeth on ratchet wheel *1*.

2709	DOUBLE-PAWL RATCHET MECHANISM	RG 4L

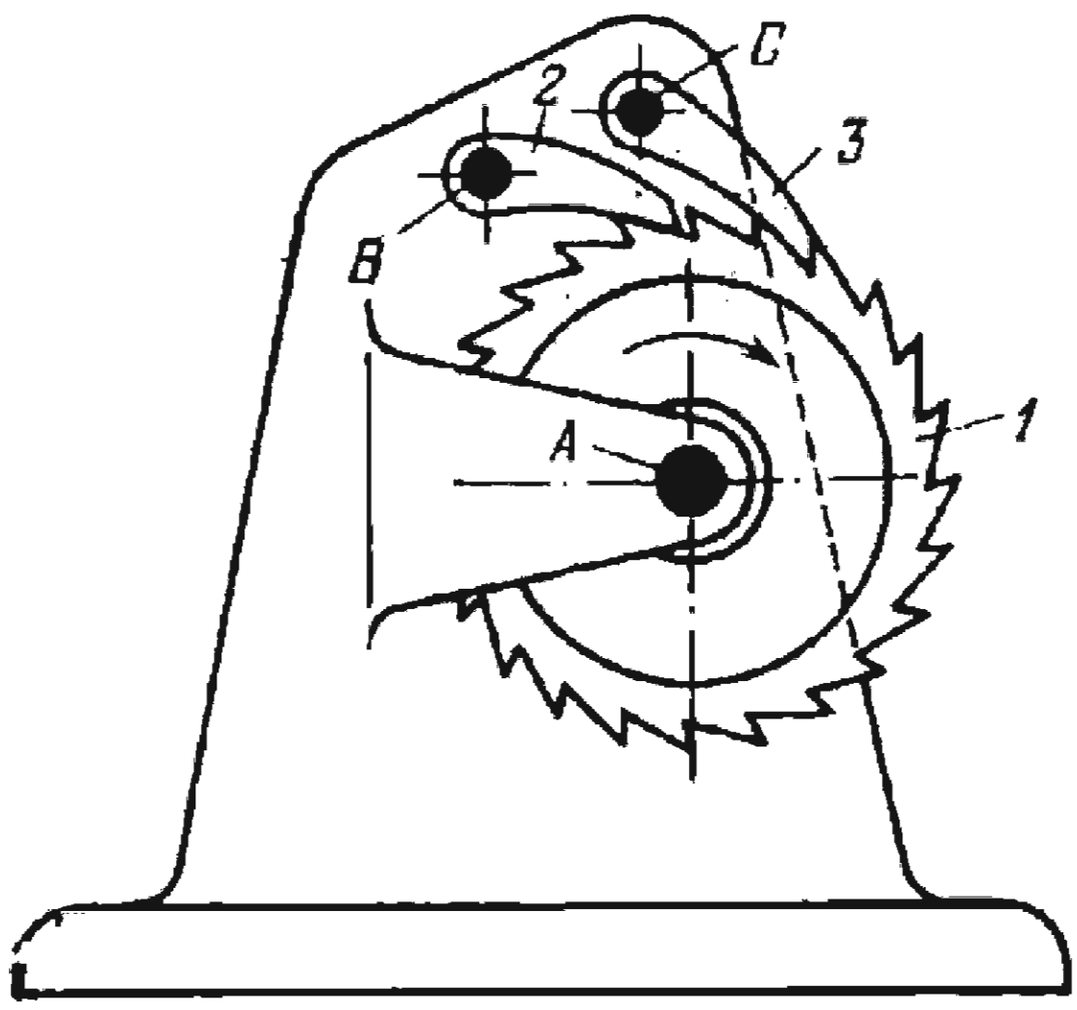

Ratchet wheel *1* rotates clockwise about fixed axis *A*. Pawls *2* and *3* turn about fixed axes *B* and *C*. The lengths of the pawls and the positions of axes *B* and *C* are such that when either pawl engages a tooth of wheel *1*, the other pawl is at the middle of the pitch between two adjacent teeth. The pawls prevent reverse rotation of wheel *1* by more than one half pitch. The provision of two pawls is equivalent to doubling the number of teeth on ratchet wheel *1*.

2710	INTERNAL-TOOTH FOUR-PAWL OVERRUNNING RATCHET MECHANISM	RG ML

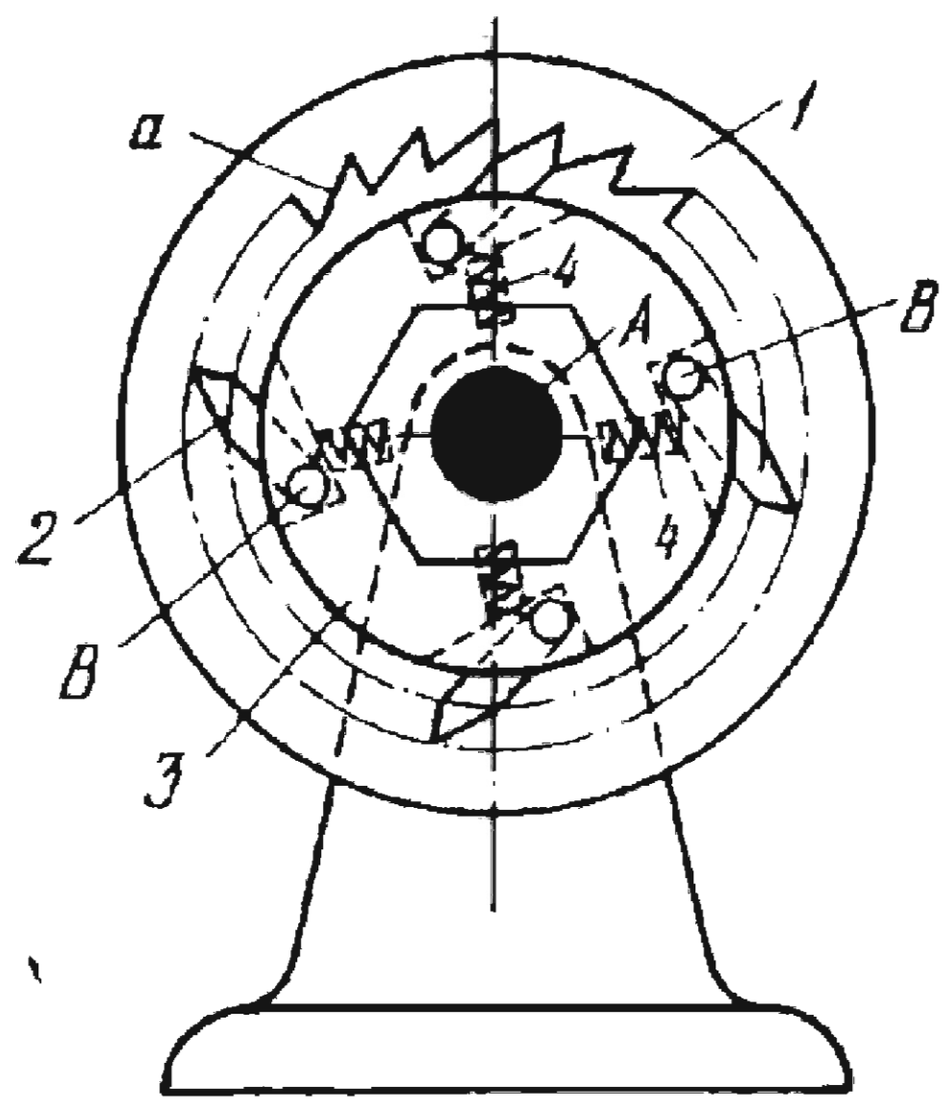

Ratchet wheel *1* rotates about fixed axis *A* and has teeth *a* located on its inside surface. Driving link *3* rotates clockwise about axis *A* and is connected by turning pairs *B* to four pawls *2* which are held in engagement with teeth *a* of wheel *1* by springs *4*. Link *3* rotates wheel *1* clockwise at the same speed and the pawls prevent counterclockwise rotation of wheel *1* with respect to link *3*. But ratchet wheel *1* can rotate faster clockwise than link *3* from another drive (not shown).

2711	LEVER-TYPE RATCHET OVERRUNNING MECHANISM	RG ML

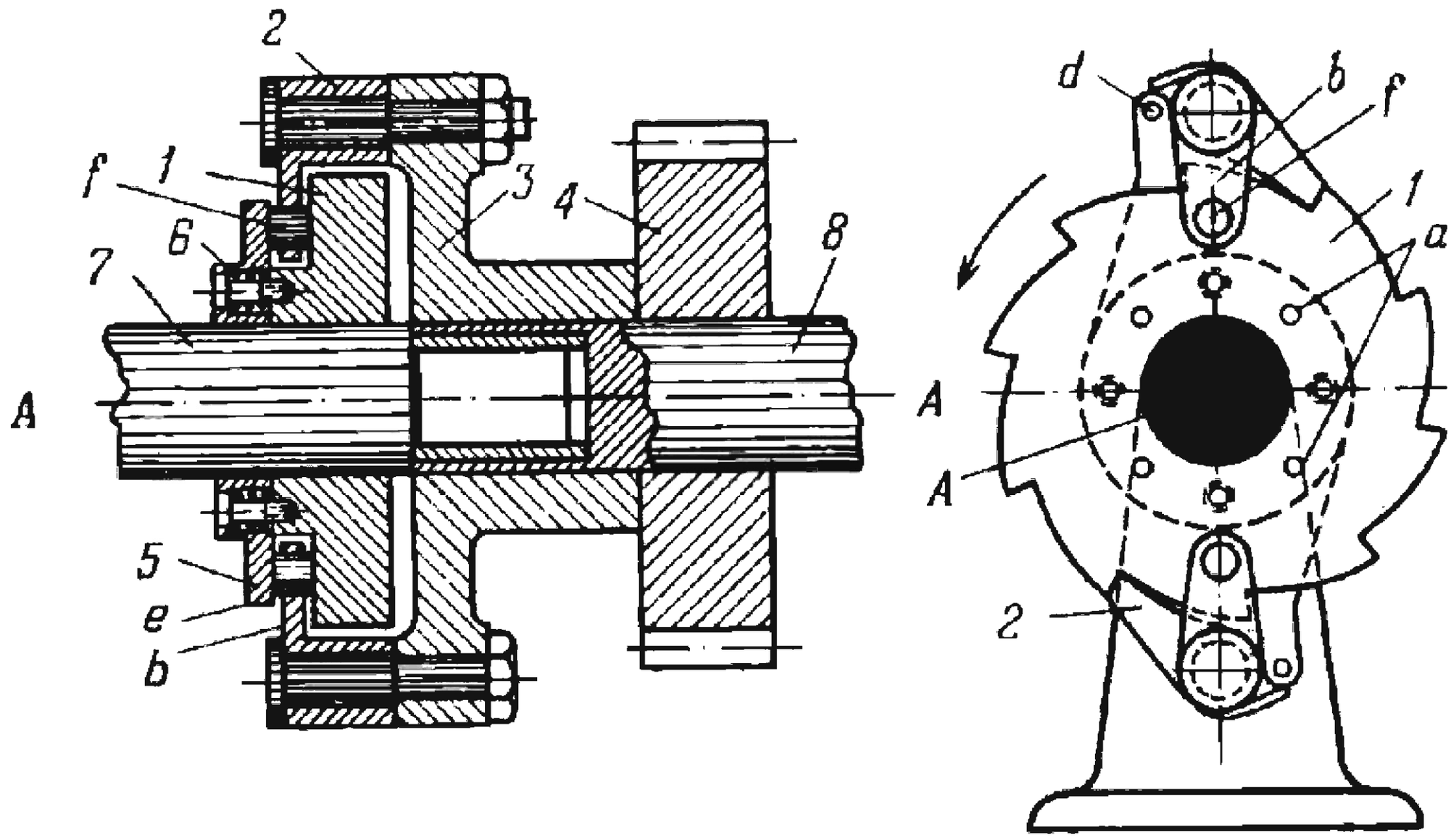

Ratchet wheel *1* is keyed on low-speed shaft *7* and rotates counterclockwise with it about fixed axis *A*. Through pawls *2* and flange *3* counterclockwise rotation is transmitted to high-speed shaft *8*. Pawls *2* turn on pins in flange *3*, and flange *3* and gear *4* are keyed on shaft *8*. In this case, shaft *8* rotates at the same speed as shaft *7*. Friction plugs (fibre drag-plugs) *f* are set in holes in lugs *b* of pawls *2*. These plugs are held by springs *6* tightly between pressure disk *5* and ratchet wheel *1*. Pressure disk *5* is a sliding fit on shaft *7* and is driven by ratchet wheel *1* through pins *a*. When high-speed shaft *8* begins to rotate at a higher speed, being driven by gear *4*, pawls *2* are disengaged and plugs *f* drag between disk *5* and wheel *1*, causing the pawls to be lifted clear of the ratchet teeth. The pawls remain in this disengaged position until the high-speed drive to gear *4* is disengaged. At this the drag on plugs *f* is reversed, causing pawls *2* to swing down again and engage the teeth of wheel 1. Stop pins *d* keep the drag-plugs from swinging too far and becoming entirely disengaged from disk *5* and wheel *1*.

2712	SPRING-DRIVE RATCHET MECHANISM	RG ML

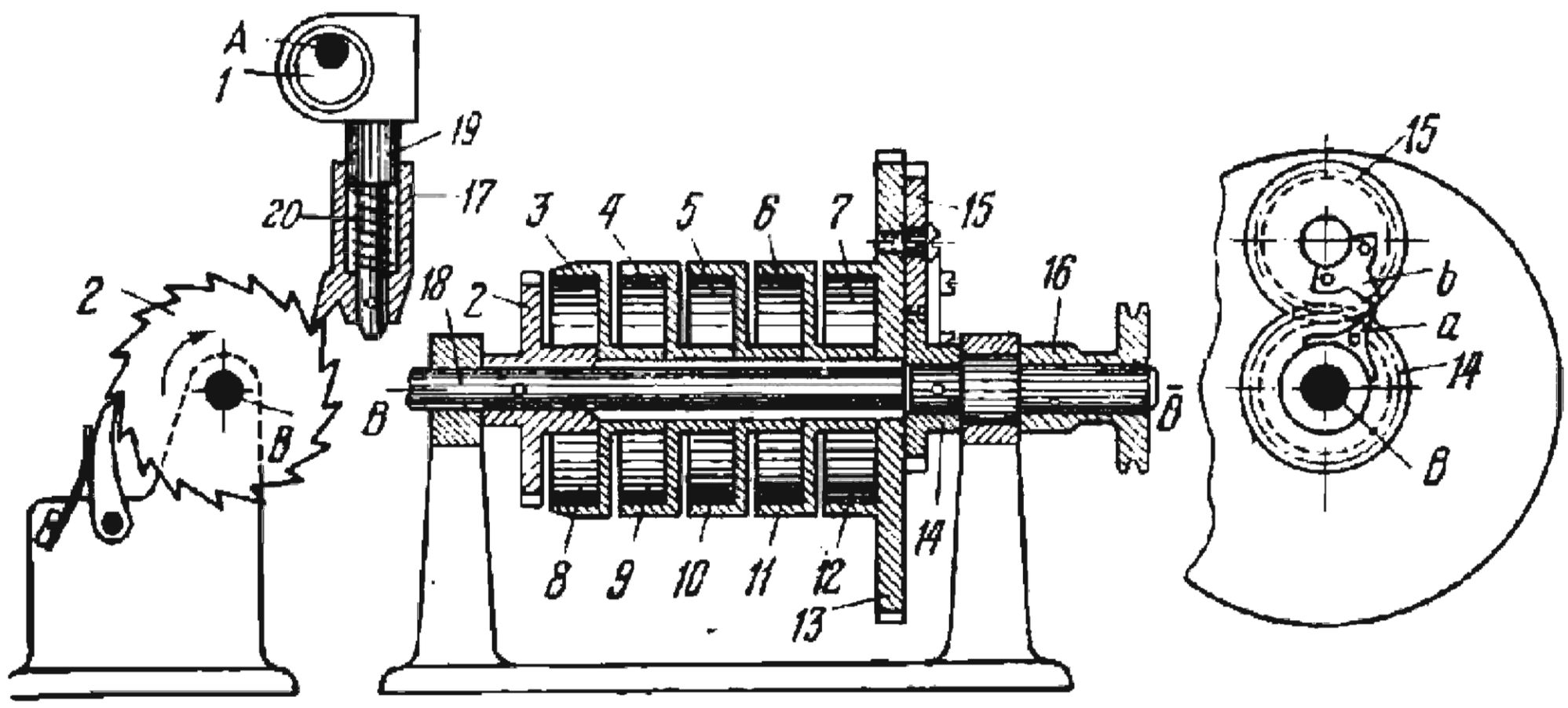

When eccentric *1* rotates about fixed axis *A*, link *17* reciprocates and rotates ratchet wheel *2* intermittently. Wheel *2* is keyed on shaft *18* which rotates about fixed axis *B*. In its rotation, shaft *18* consecutively winds flat spiral springs *3*, *4*, *5*, *6* and *7*. The outer ends of these springs are attached inside drums *8*, *9*, *10*, *11* and *12*, and the inner ends to hubs of ratchet wheel *2* and of the drums. The inner end of spring *3* is attached to the hub of wheel *2*, the inner end of spring *4* to the hub of drum *8*, the inner end of spring *5* to the hub of drum *9*, etc. Drum *12* is rigidly attached to (or integral with) gear *13* which is driven by the springs. To avoid overwinding the springs, a stop mechanism is provided, consisting of gears *14* and *15* carrying lugs *a* and *b*. After a certain number of revolutions, the lugs run up against each other, preventing further rotation of shaft *18*. When this occurs, link *17* slides up and down on member *19* compressing and releasing spring *20*. The springs can also be wound by hand, turning head *16* clockwise (in the same direction as wheel *2*).

2713	RATCHET MECHANISM FOR CONVERTING RECIPROCATING MOTION INTO ROTATION	RG ML

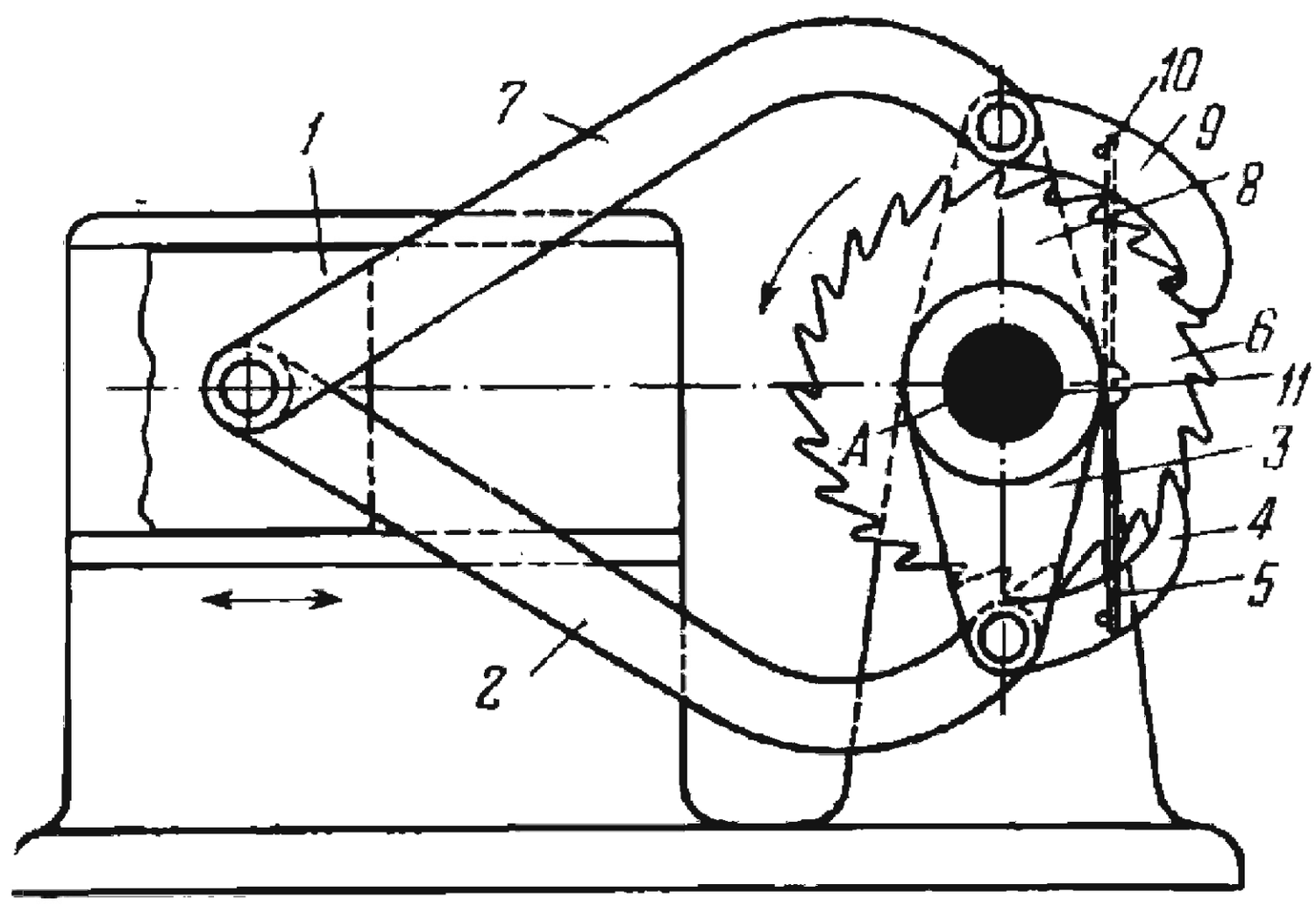

When slide *1* moves to the right, motion is transmitted through lever *2* to lever *3* which turns freely on shaft *11* about fixed axis *A*. At this, pawl *4*, held in engagement with the teeth of ratchet wheel *6* by flat spring *5*, turns wheel *6* counterclockwise together with shaft *11* to which it is keyed. When slide *1* moves to the left, motion is transmitted through lever *7* to lever *8* which turns freely on shaft *11*. At this, pawl *9*, held in engagement with the teeth of ratchet wheel *6* by flat spring *10*, turns wheel *6* again in the same direction. Pawl *4* slides over the teeth of wheel *6* when slide *1* moves to the left. Thus, reciprocating motion of slide *1* is converted into intermittent counterclockwise rotation of wheel *6* and shaft *11*.

2714	RATCHET MECHANISM WITH AN ELASTIC LINK	RG ML

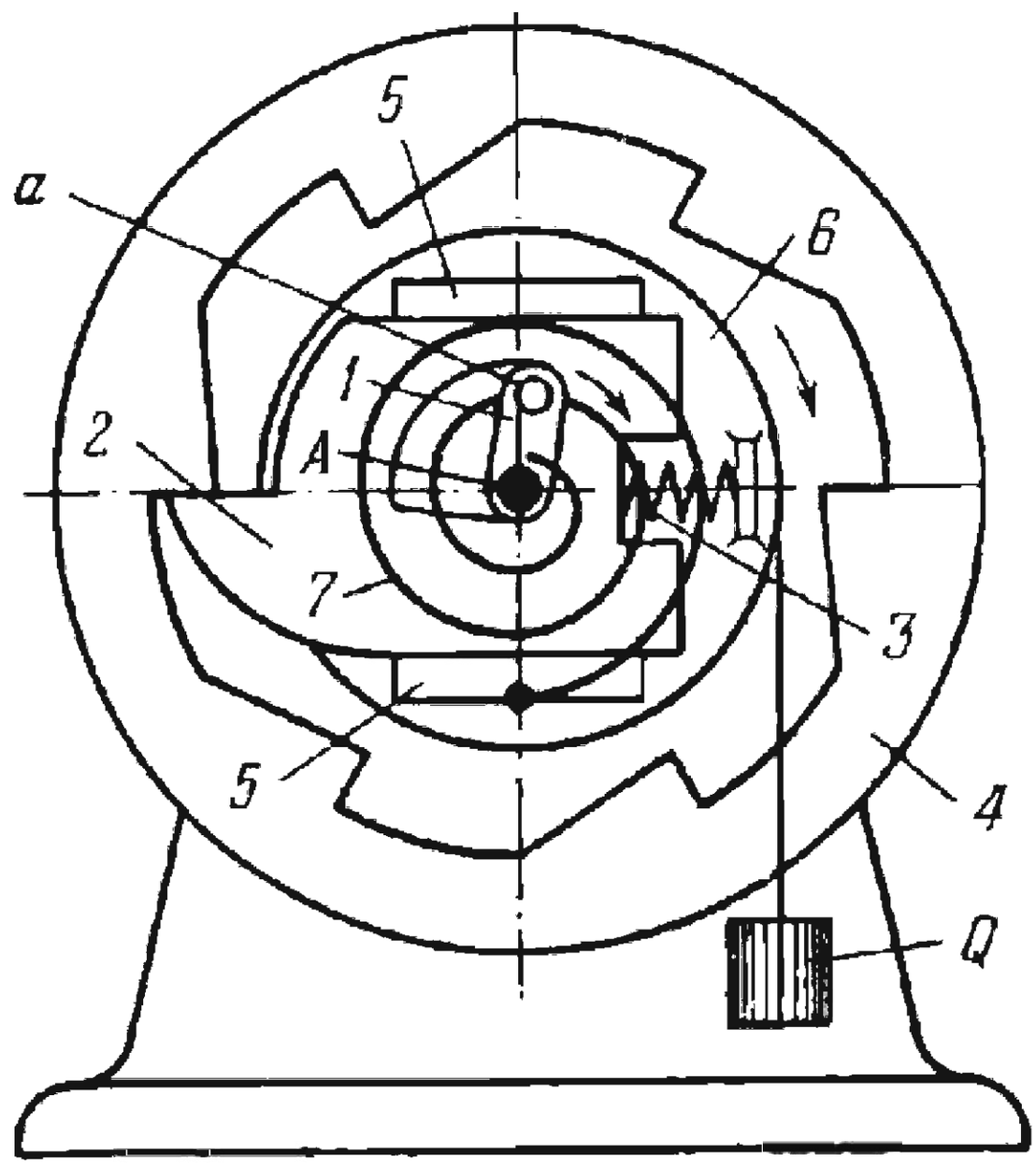

A torque is applied by weight *Q* to disk *6* which rotates about fixed axis *A*. Disk *6* is connected by flat spiral spring *7* to link *1*. Pawl *2* slides in guides *5* of disk *6* and engages the internal teeth of fixed ratchet wheel *4*. The action of spiral spring *7* causes link *1* to turn and, by means of pin *a*, to withdraw pawl *2* from engagement with ratchet wheel *4*, compressing spring *3*. After this, disk *6* turns until pawl *2* engages the next tooth of ratchet wheel *4* due to the action of spring *3*. Link (crank) *1* is stopped when disk *6* begins to turn by a special mechanism (not shown). Therefore, spiral spring *7* is tensioned and the whole process is repeated.

2715	RATCHET MECHANISM WITH AN ELASTIC LINK	RG ML

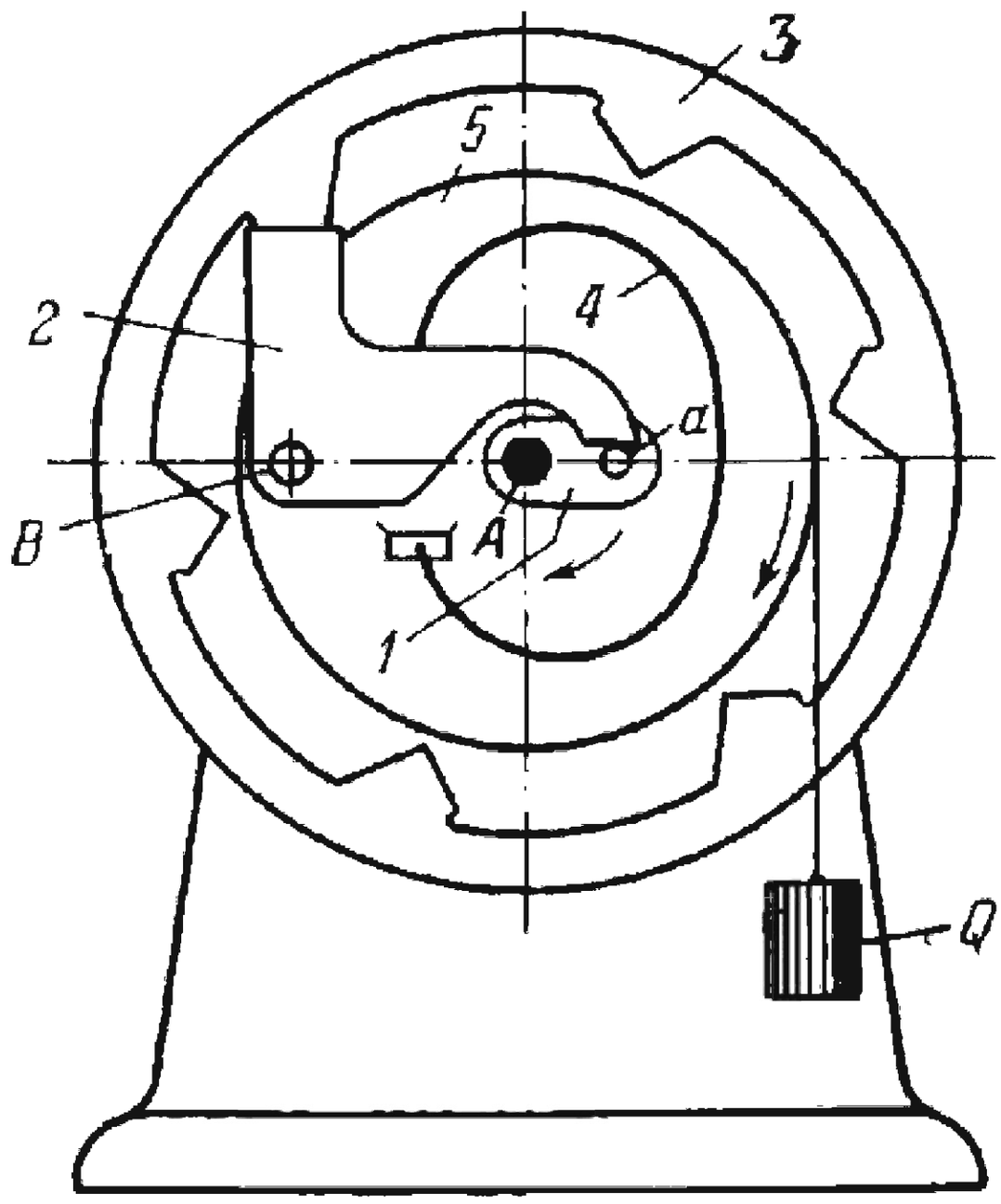

A torque is applied by weight *Q* to disk *5* which rotates about fixed axis *A*. One end of flat spring *4* is attached to disk *5* and the other end actuates pawl *2* which is connected by turning pair *B* to disk *5*. Through pawl *2* and pin *a*, spring *4* turns link *1*. At this pawl *2* is withdrawn from engagement with a tooth of fixed ratchet wheel *3* and disk *5* turns from the action of weight *Q* until pawl *2*, bearing against pin *a* of link *1*, which is stopped by a special mechanism (not shown), engages the next tooth of ratchet wheel *3*. As disk *5* turns, spring *4* is tensioned and the whole process is repeated.

2716	WEDGE-LINK RATCHET MECHANISM	RG ML

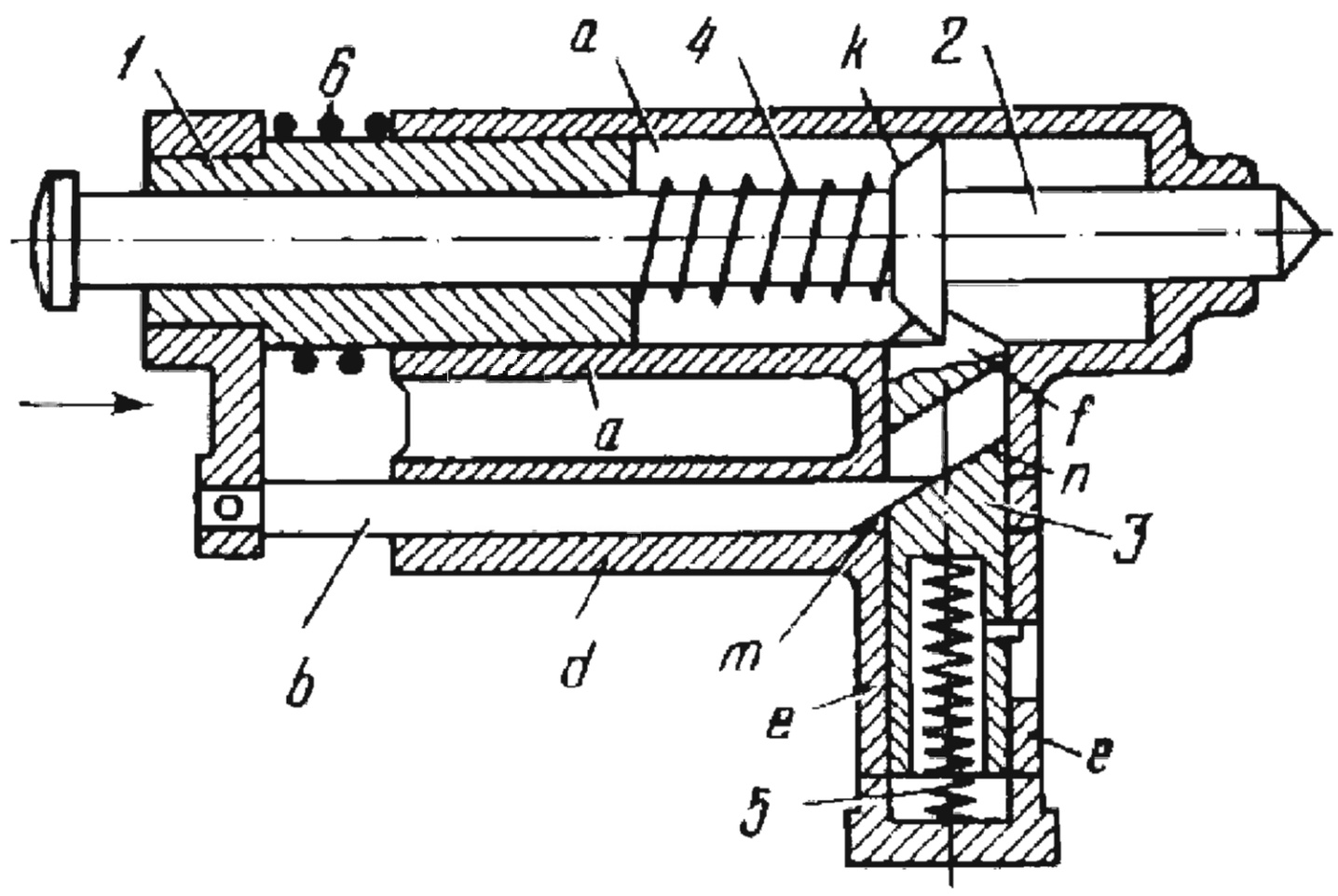

Link *1*, carrying wedge member *b*, slides in fixed guides *a-a*. Latch *3* slides in fixed guides *e-e* and has at its upper end detent *f* which locks member *k* of rod *2*. Rod *2* slides in link *1*. Latch *3* is held in engagement with member *k* by spring *5*, and link *1* is pushed to the left by spring *6*. When link *1* is pushed to the right, bevelled surface *m* of member *b* slides along inclined surface *n* of latch *3*, withdrawing the latch from engagement with member *k*. This releases rod *2* which, like link *1*, moves to the right (due to the action of spring *4*).

2717 SLIDING-PAWL RATCHET MECHANISM WITH THREE DRIVING PAWLS

RG ML

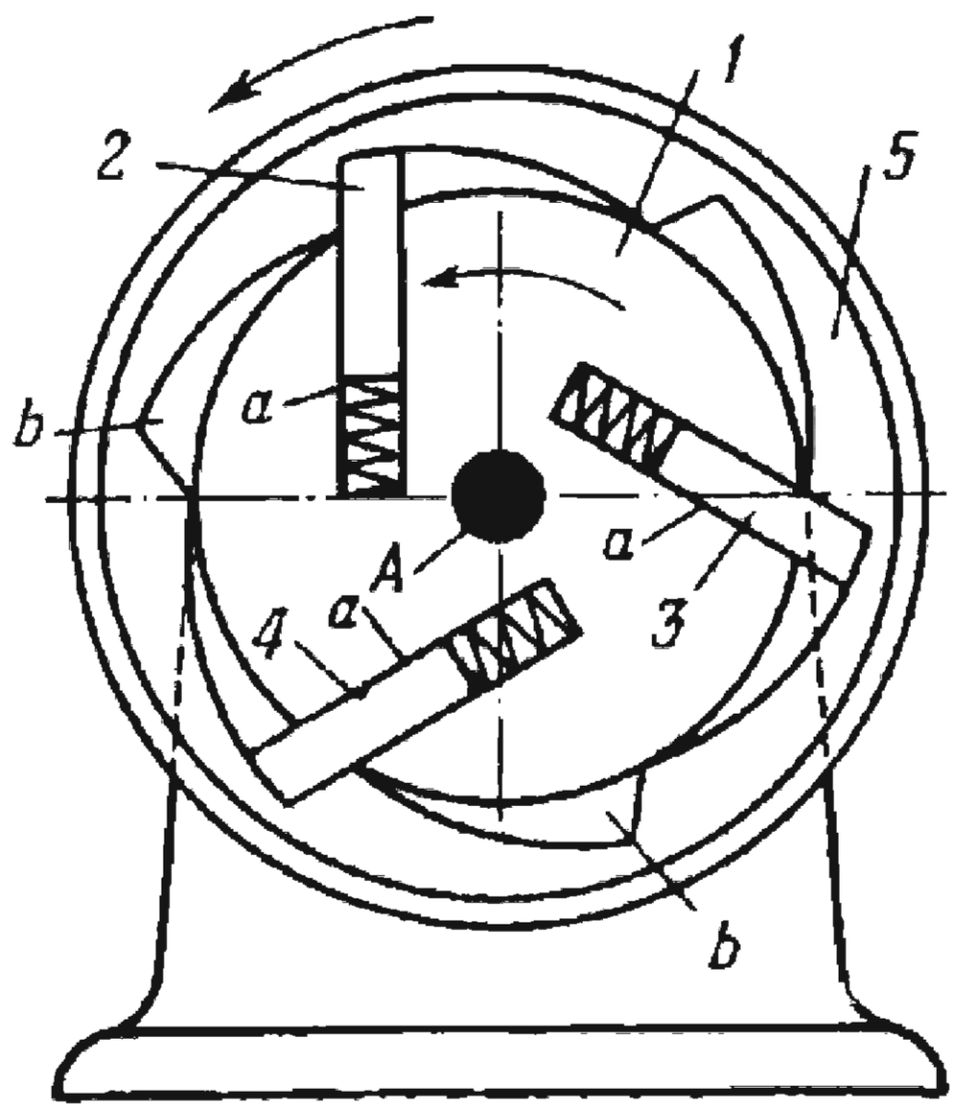

Link *1* rotates about fixed axis *A* and has three symmetrically located slots *a* along which three prismatic pawls, *2*, *3* and *4*, slide. The pawls slide along axes located at angles of 120° from one another. Internal-tooth ratchet wheel *5* with teeth *b* rotates freely about axis *A*. When link *1* rotates counterclockwise, pawls *2*, *3* and *4* engage teeth *b* and rotate wheel *5* counterclockwise at the angular velocity of link *1*. When link *1* rotates clockwise, wheel *5* is stationary.

2718 RATCHET MECHANISM WITH A REVERSIBLE RADIAL PAWL

RG ML

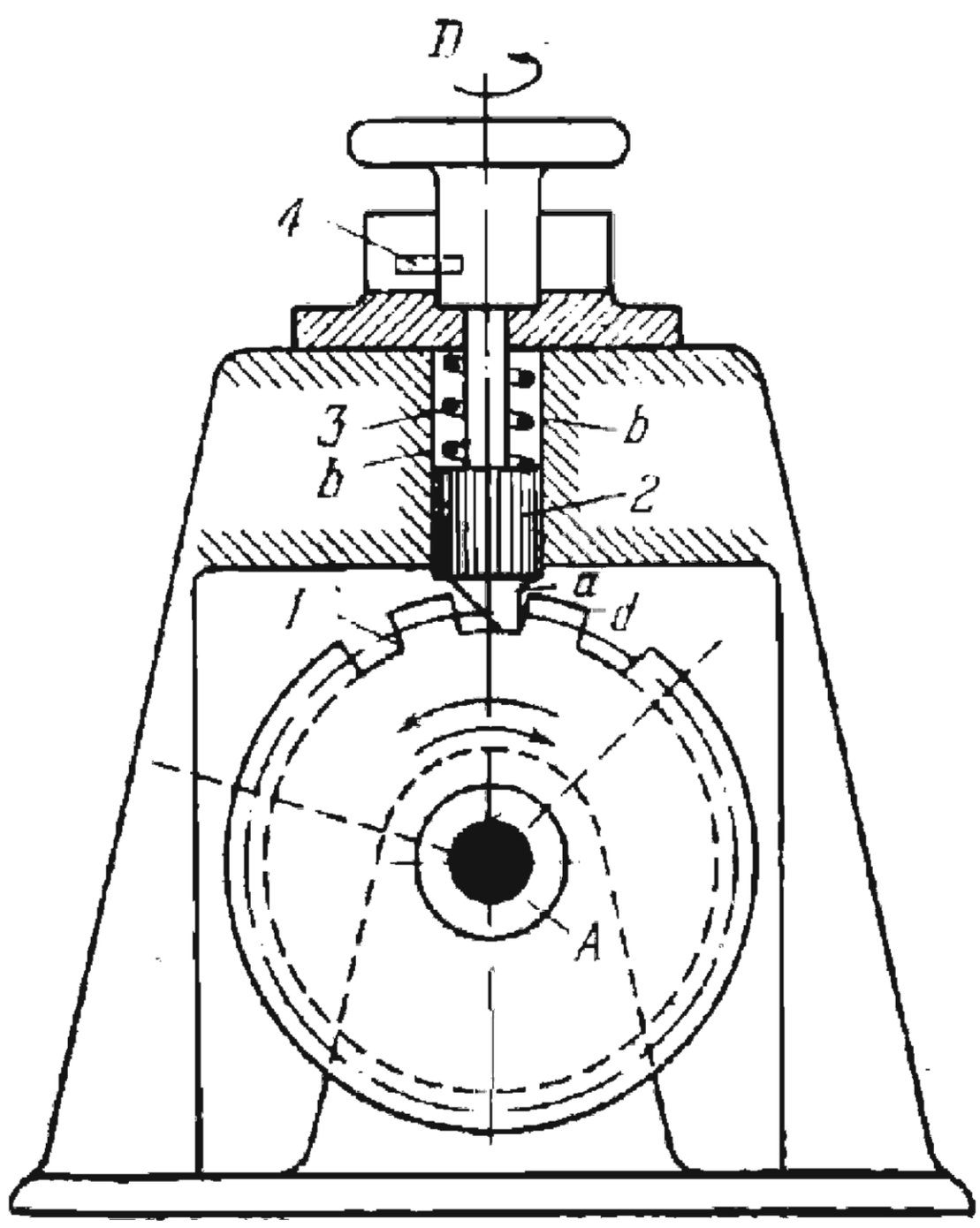

Ratchet wheel *1* rotates about fixed axis *A*. Pawl *2* is actuated by spring *3* and can slide in fixed guides *b-b*. Tooth *a* of pawl *2* engages teeth *d* of wheel *1*. Pin *4* slides in a vertical slot of the base and indexes the position of pawl *2*. As shown, pawl *2* prevents counterclockwise rotation of wheel *1*. Pawl *2* can be lifted and turned through 180° in which case it prevents clockwise rotation instead.

2719	RATCHET MECHANISM WITH A COMMON LATCH FOR SEVERAL LINKS	RG ML

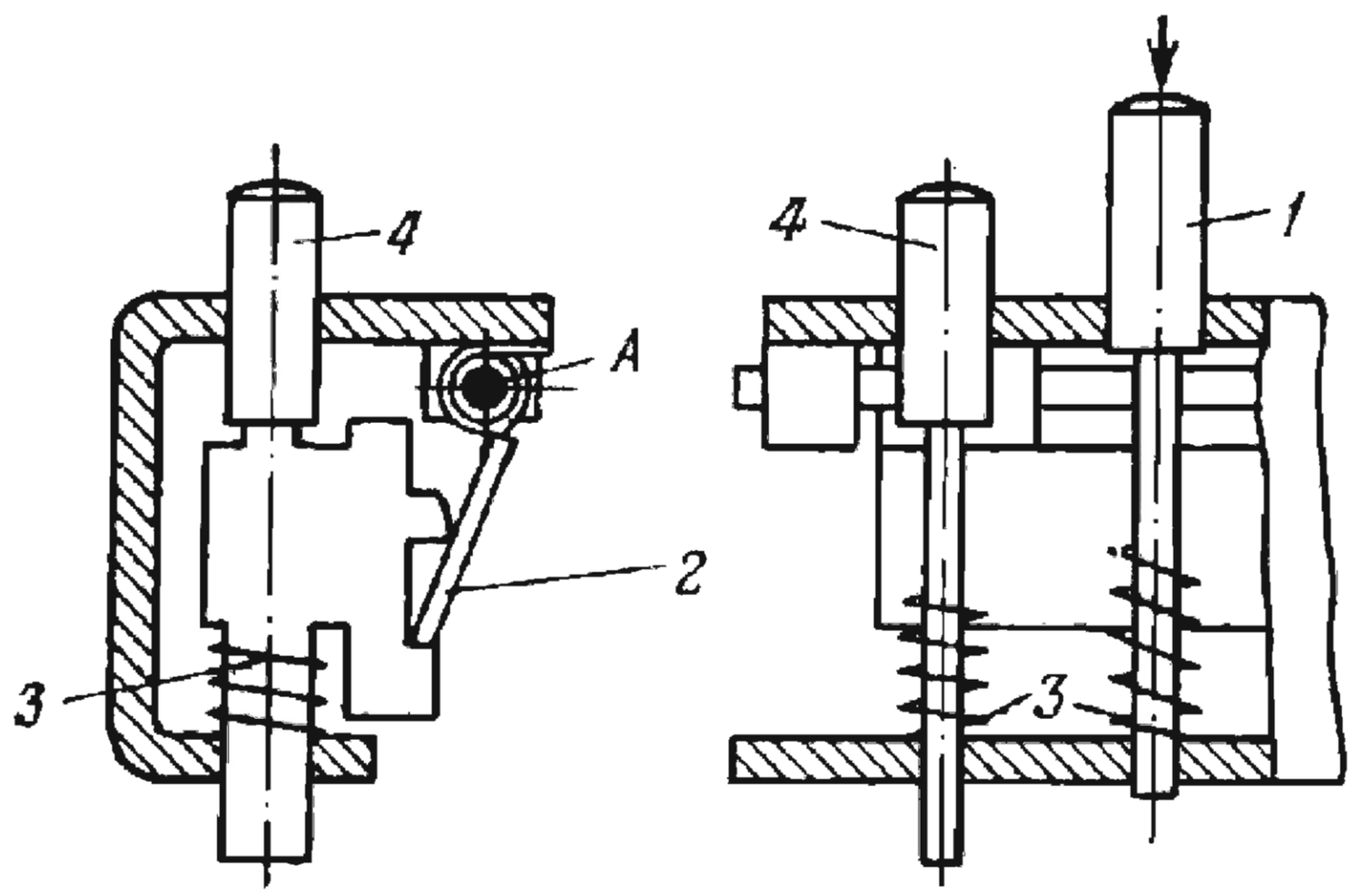

When link *1* is depressed, common latch *2* is turned about fixed axis *A*, releasing link *4* which is returned to its initial position by spring *3*.

2720	RATCHET MECHANISM WITH A COMMON LATCH FOR SEVERAL LINKS	RG ML

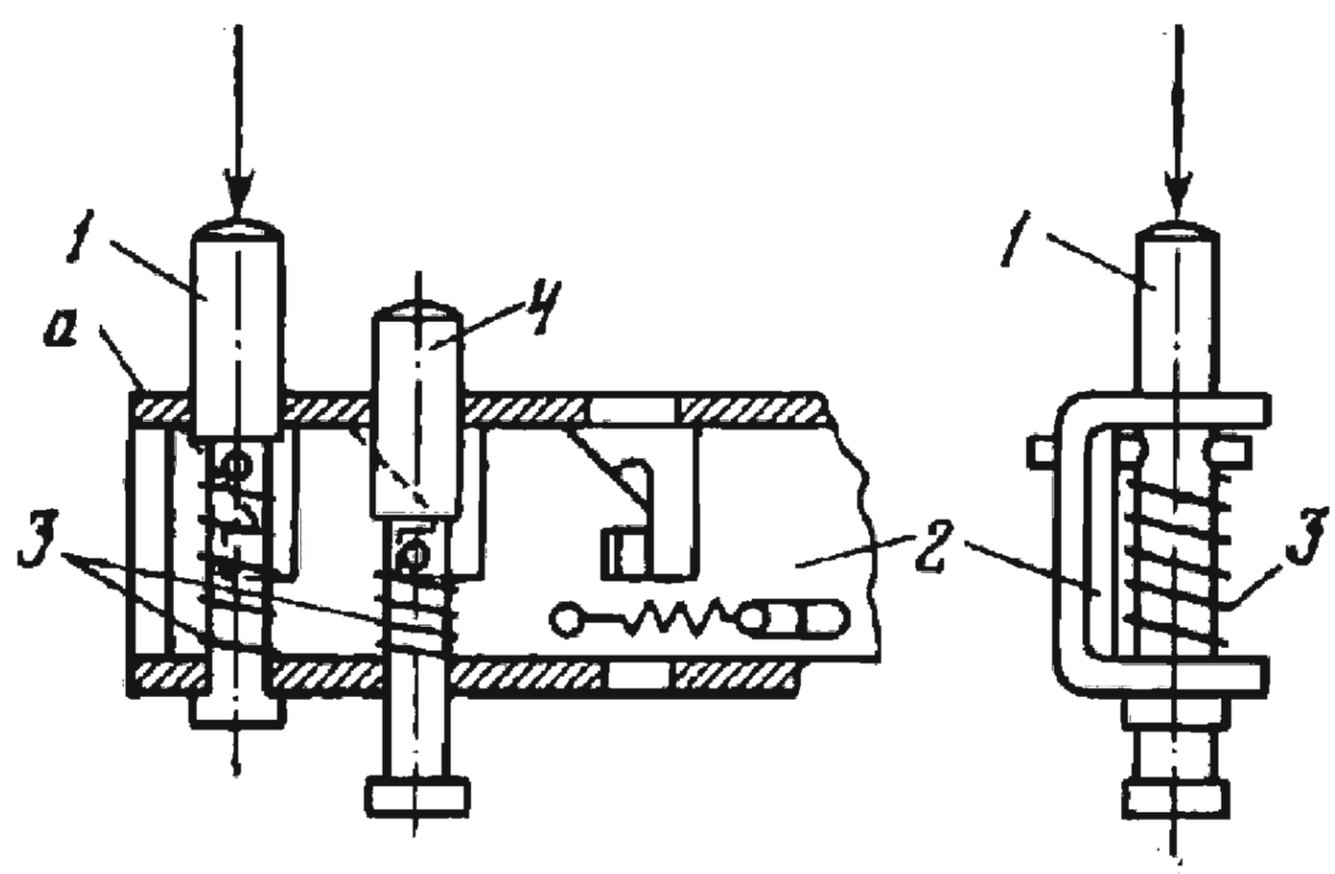

When link *1* is depressed, common latch *2* is shifted along fixed guide *a*, releasing link *4* which is returned to its initial position by spring *3*.

2721	ROCKING-LINK RATCHET MECHANISM	RG ML

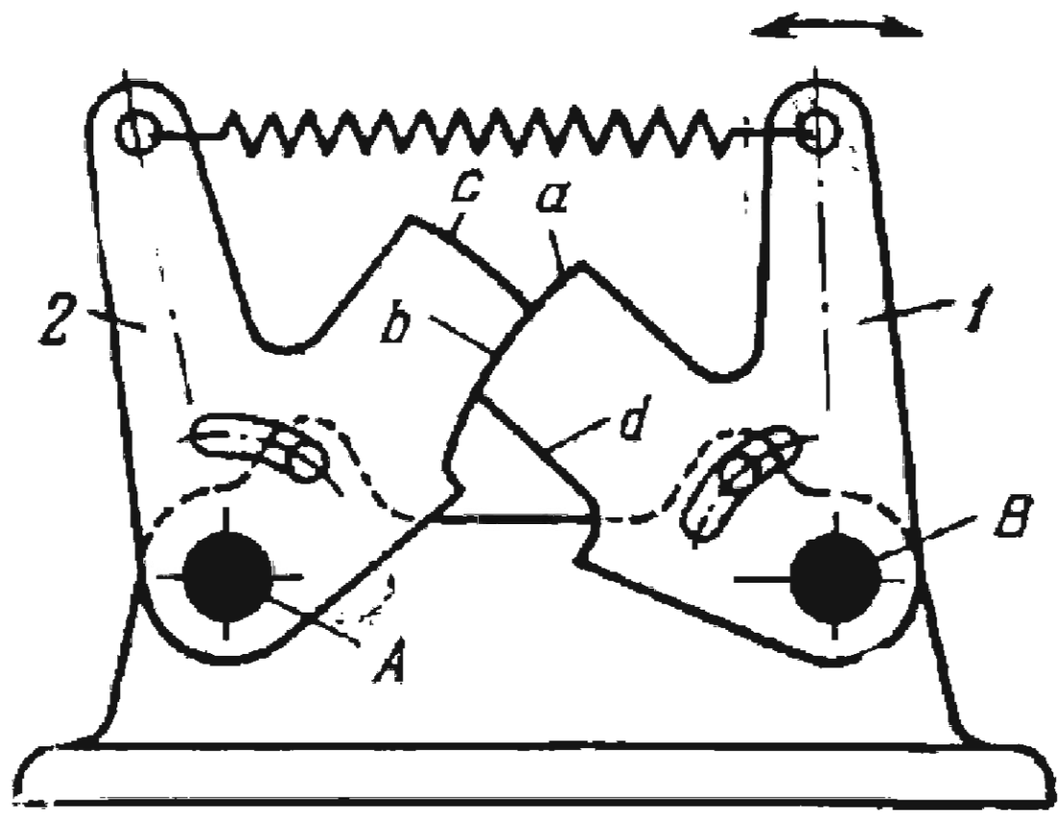

Links *1* and *2* turn about fixed axes *B* and *A*. Links *1* and *2* alternate as driving and driven links. When link *1* turns clockwise, link *2* is stationary as long as lug *a* of link *1* slides along recess *b* of link *2*. At the extreme position of link *1*, lug *a* slides out of engagement with recess *b* and link *2* turns clockwise so that lug *c* of link *2* slides along recess *d* of link *1*.

2722	CAM-DRIVEN RATCHET MECHANISM	RG ML

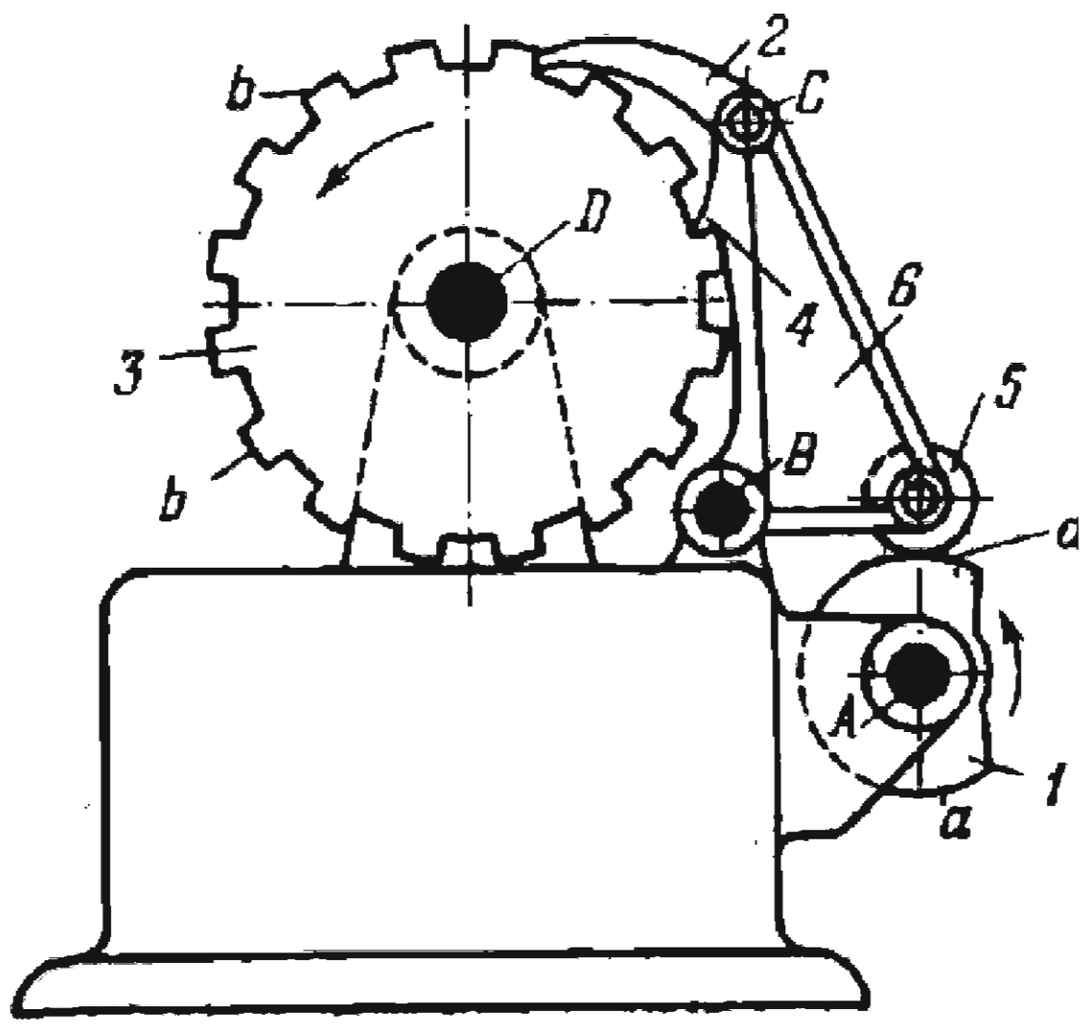

Cam *1* rotates about fixed axis *A* and, through roller *5*, turns link *6* about fixed axis *B*. Pawl *2* turns about axis *C* of link *6* and engages teeth *b* of ratchet wheel *3* which rotates about fixed axis *D*. When roller *5* is raised by the lobe of cam *1*, pawl *2* turns wheel *3* counterclockwise. As roller *5* rolls around lobe surface *a-a* of cam *1*, tooth *4* of link *6* locks wheel *3* against further counterclockwise rotation and pawl *2* locks it against clockwise rotation.

2723 RATCHET MECHANISM WITH A HELICAL SLOT

RG
ML

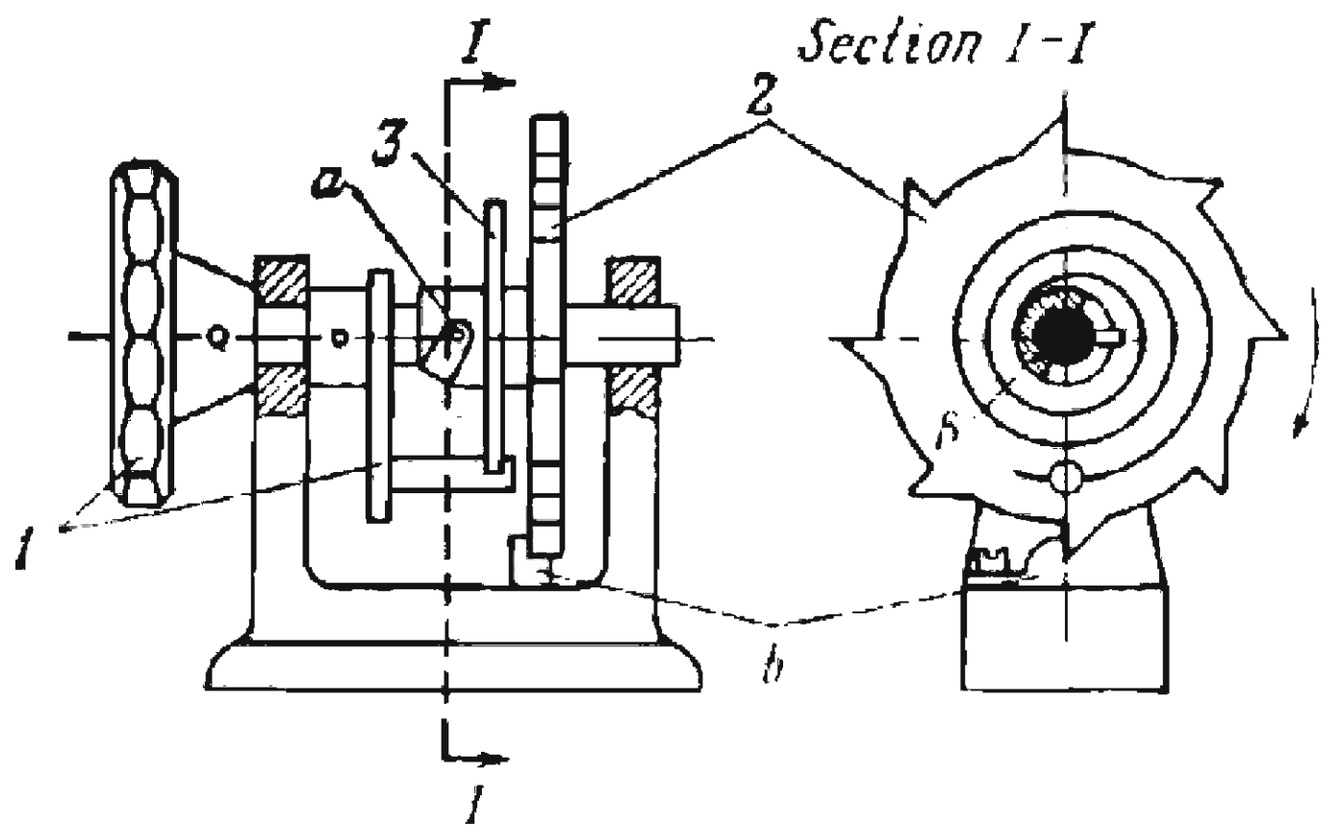

When knob *1* is turned clockwise about fixed axis *B*, spiral spring *3* is wound up. At the same time, pin *a* moves along a helical slot of ratchet wheel *2* and shifts the wheel axially to the right until a tooth of the wheel becomes disengaged from stop *b* of the base. After this, ratchet wheel *2* has a helical motion, turning through an angle corresponding to one tooth.

2724 TWO-DIRECTIONAL RATCHET MECHANISM

RG
ML

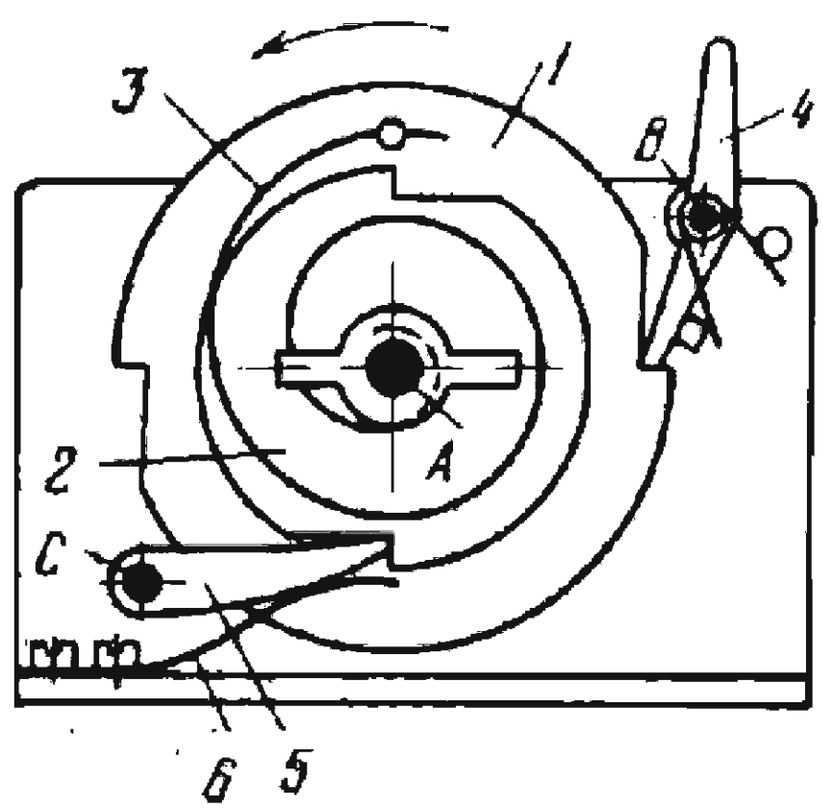

Disks *1* and *2* rotate freely about fixed axis *A*. Pawl *4* turns about fixed axis *B*. When pawl *4* is turned out of engagement with disk *1*, the disk turns one half revolution counterclockwise due to the action of spiral spring *3* which has one end fastened to disk *2* and the other to disk *1*. When disk *2* is turned in the same direction one half revolution, spring *3* is wound up again as in the initial position. Disk *2* is locked by pawl *5* which turns about fixed axis *C* and is held in engagement with disk *2* by spring *6*.

2725	TWO-DIRECTIONAL RATCHET MECHANISM	RG ML

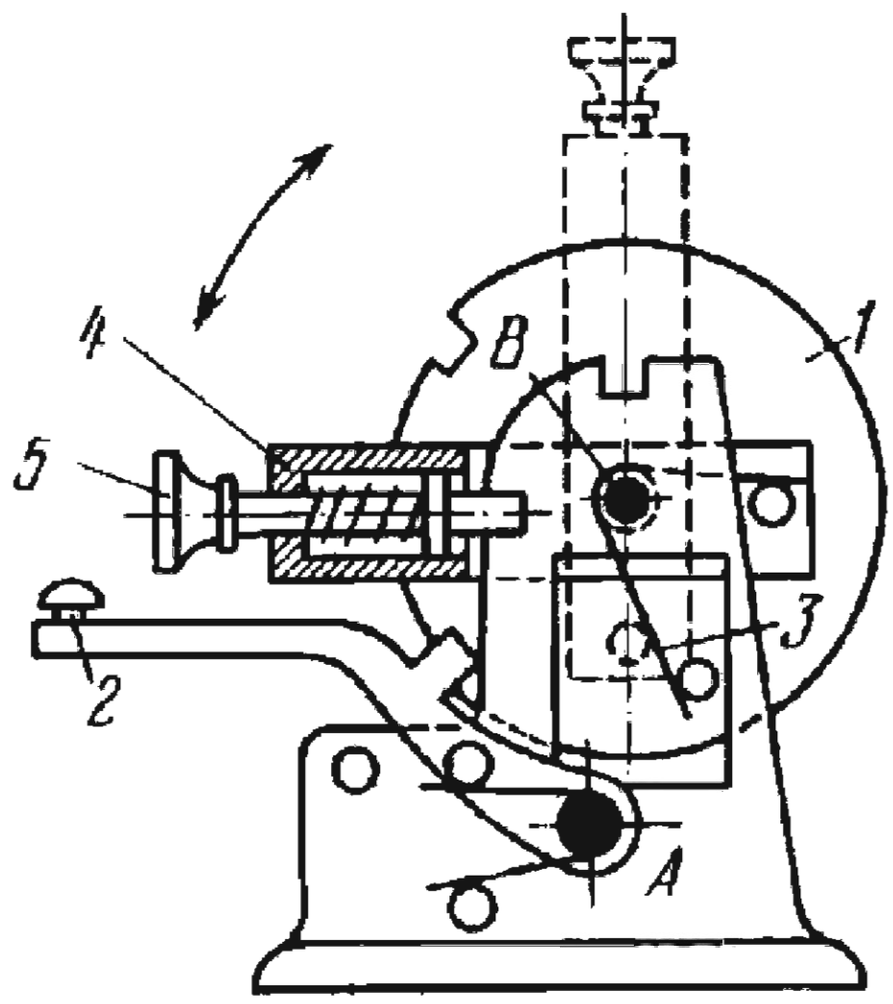

Pawl *2* turns about fixed axis *A*. When pawl *2* is turned out of engagement with disk *1*, the disk is turned by spring *3* about fixed axis *B* first in one direction and then in the other. Spring *3* is tensioned by turning link *4*, carrying sliding locking member *5*, from the position shown by dash lines to that shown by continuous lines and back again.

2726	FRICTION-PAWL RATCHET MECHANISM	RG ML

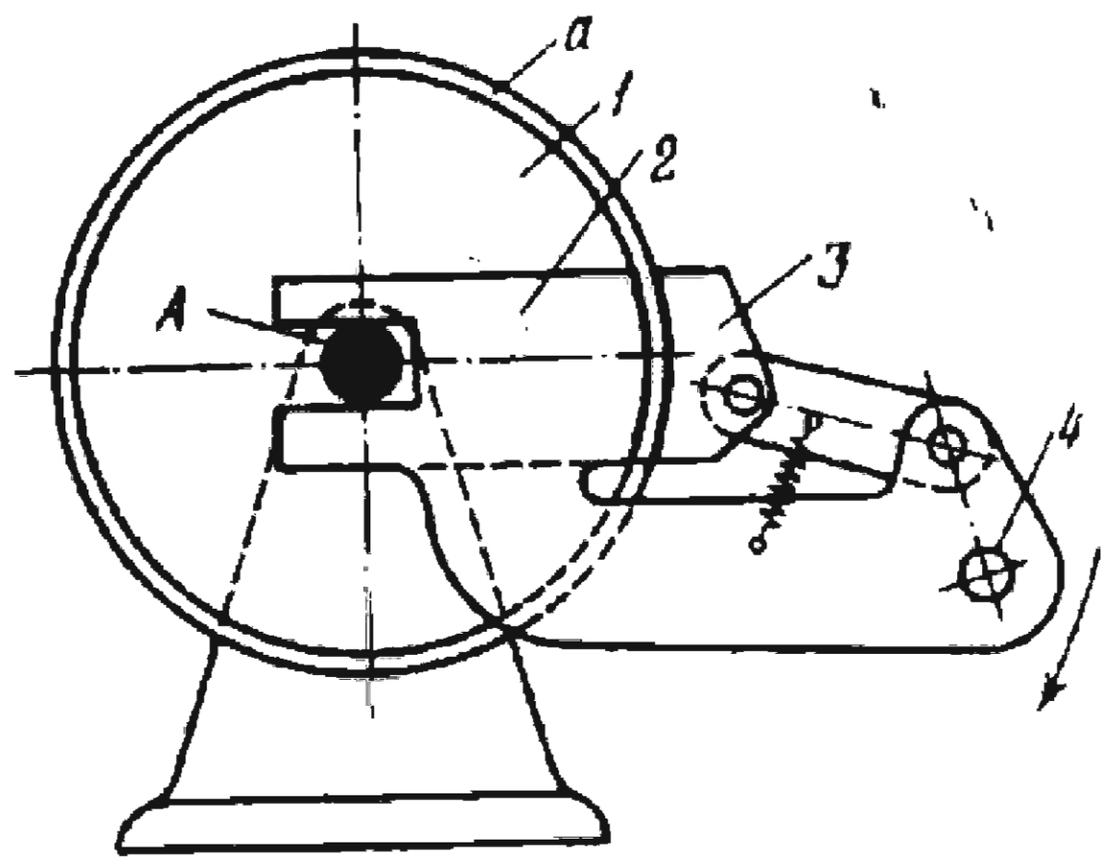

Friction wheel *1* rotates about fixed axis *A* and its flange *a* slides between link *2* and shoe *3* whose surfaces form a circular slot. When link *2* is turned clockwise with handle *4*, link *2* and shoe *3* slide over flange *a*, but when handle *4* is turned in the opposite direction, link *2* and shoe *3* grip flange *a* and all the links move together with wheel *1* as a solid unit.

2727 FREE-WHEELING RATCHET MECHANISM

RG
ML

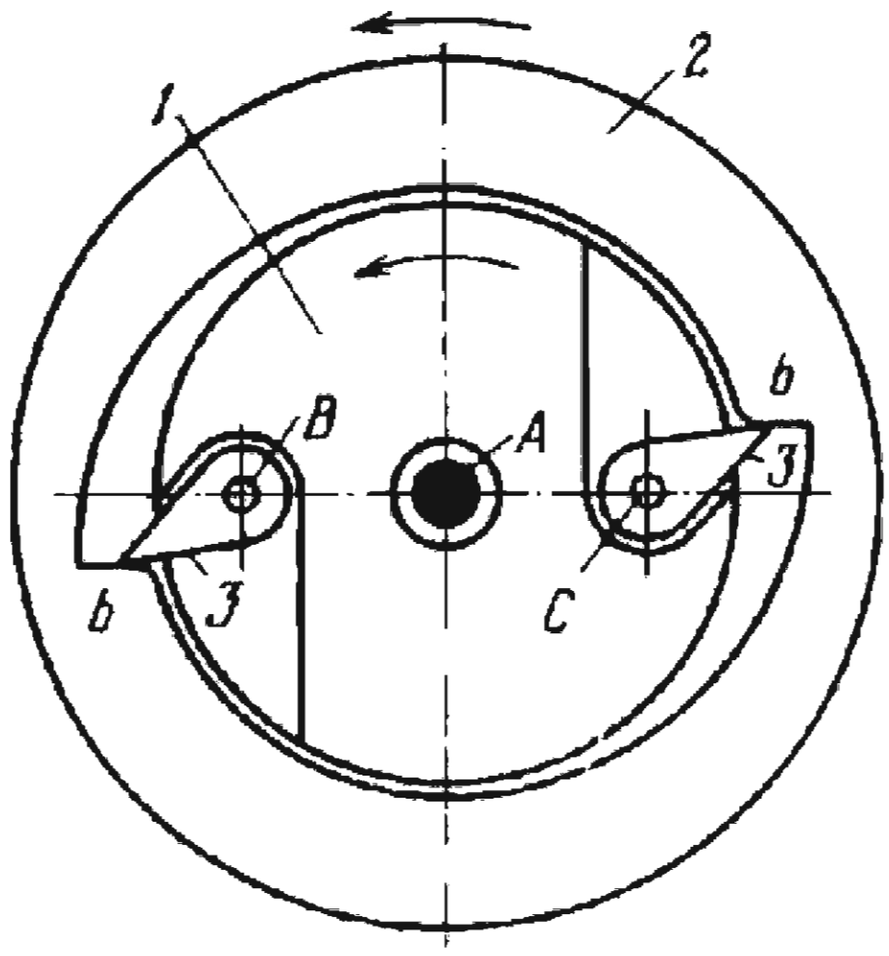

Link *1* rotates about fixed axis *A* and carries two pawls *3* which turn about axes *B* and *C*. Link *2* rotates freely about axis *A* and has recesses *b*. When driving link *1* rotates counterclockwise, pawls *3* engage recesses *b* and link *2* is rotated in the same direction. When link *1* stops, link *2* can continue to rotate by inertia. If link *1* is rotated clockwise, pawls *3* turn out of engagement and wheel *2* remains stationary.

2728 SLIDING-PAWL RATCHET MECHANISM

RG
ML

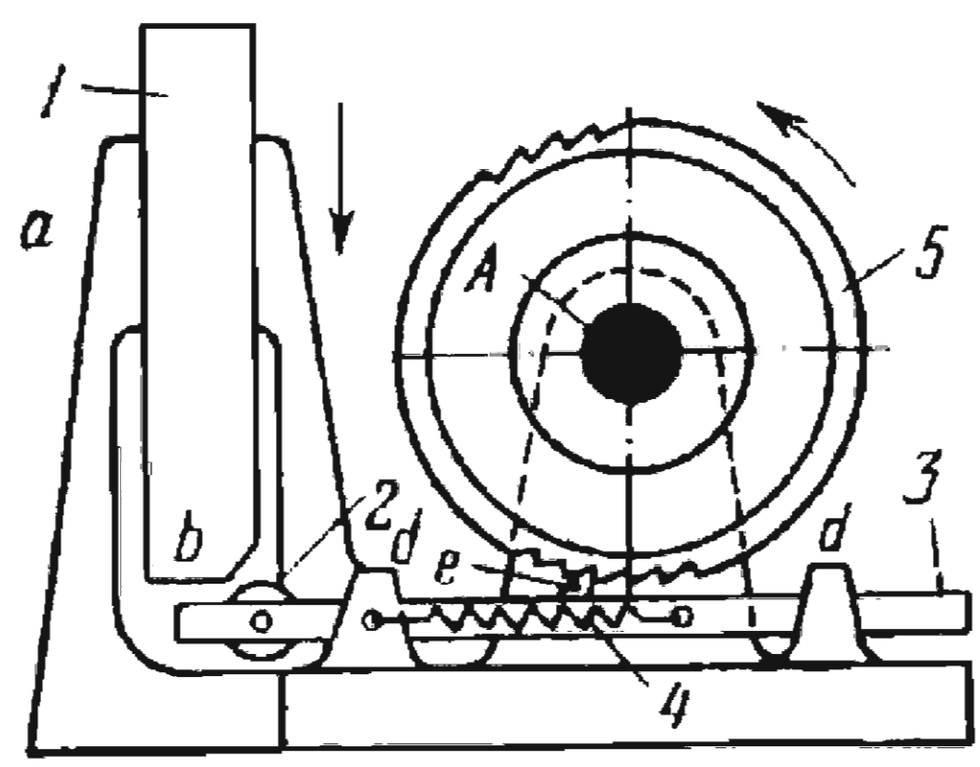

Prismatic link *1* reciprocates in fixed guide *a* and has bevel *b* at its lower end. Sliding pawl *3* moves in fixed guides *d-d*. It carries roller *2* and has tooth *e* which engages the teeth of ratchet wheel *5*. Wheel *5* rotates about fixed axis *A*. In the down stroke of driving link *1*, its bevel *b* actuates roller *2* pushing pawl *3* to the right. Tooth *e* of pawl *3* turns wheel *5* counterclockwise through an angle corresponding to one tooth. In the up stroke of link *1*, spring *4* returns pawl *3* to its initial position.

2729	RATCHET MECHANISM WITH TWO DRIVING AND ONE LOCKING PAWLS	RG ML

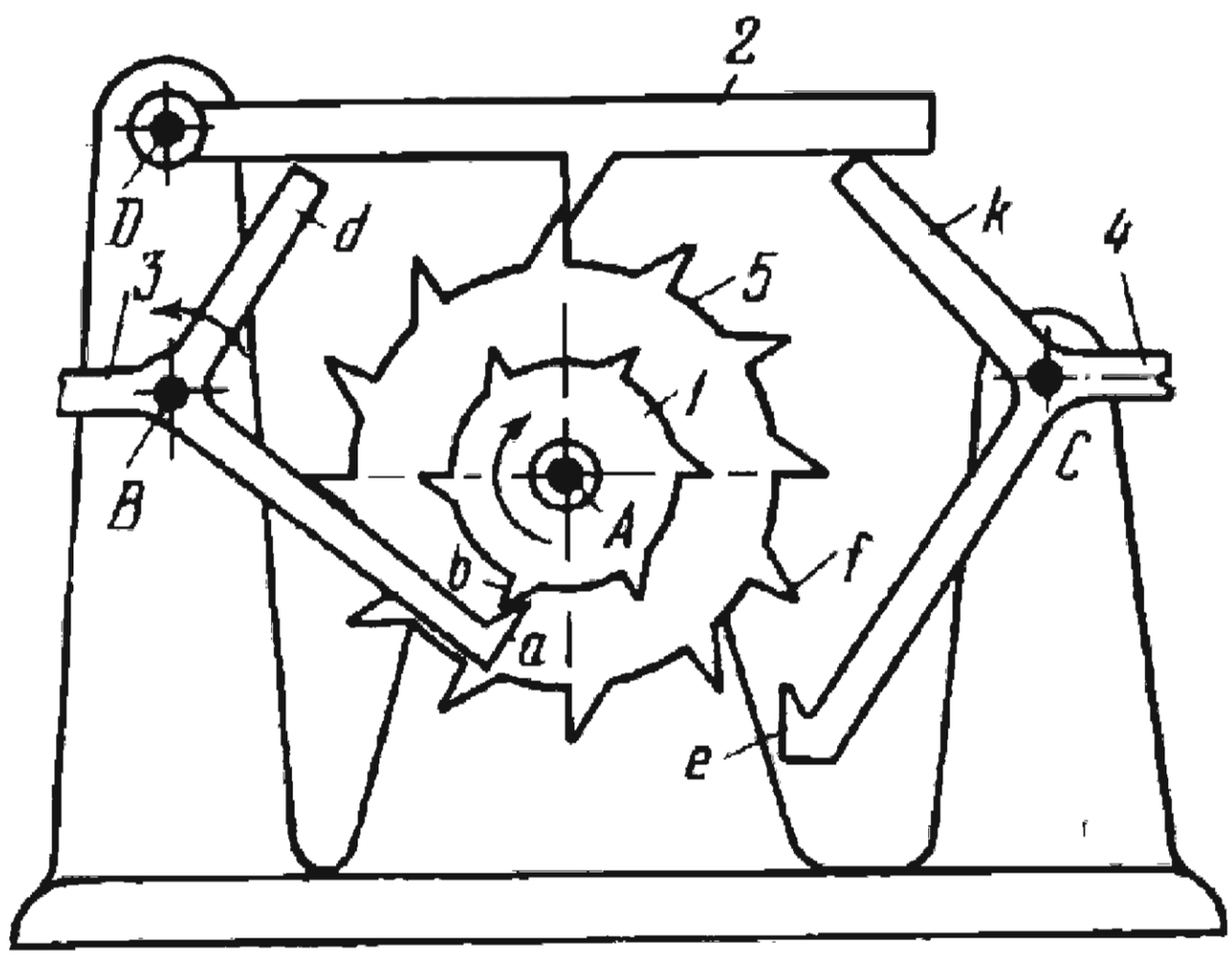

Ratchet wheels *1* and *5* are rigidly attached together (or integral) and rotate about fixed axis *A*. Wheels *1* and *5* are rotated by pawls *3* and *4* which turn about fixed axes *B* and *C*. When pallet *a* of pawl *3* engages tooth *b* of wheel *1*, the other leg *d* of pawl *3* lifts locking pawl *2* out of engagement. Pawl *2* turns about fixed axis *D*. After wheel *1* has been turned through a certain angle, pawl *3* is turned out of engagement and wheels *1* and *5* are locked again by pawl *2*. Next, pawl *4* is turned by a separate drive so that its pallet *e* engages tooth *f* of wheel *5*, and its other leg *k* lifts locking pawl *2* out of engagement. Oscillating pawls *3* and *4* alternately rotate wheels *1* and *5* intermittently clockwise.

2730	DOUBLE-PAWL-DRIVE RATCHET MECHANISM	RG ML

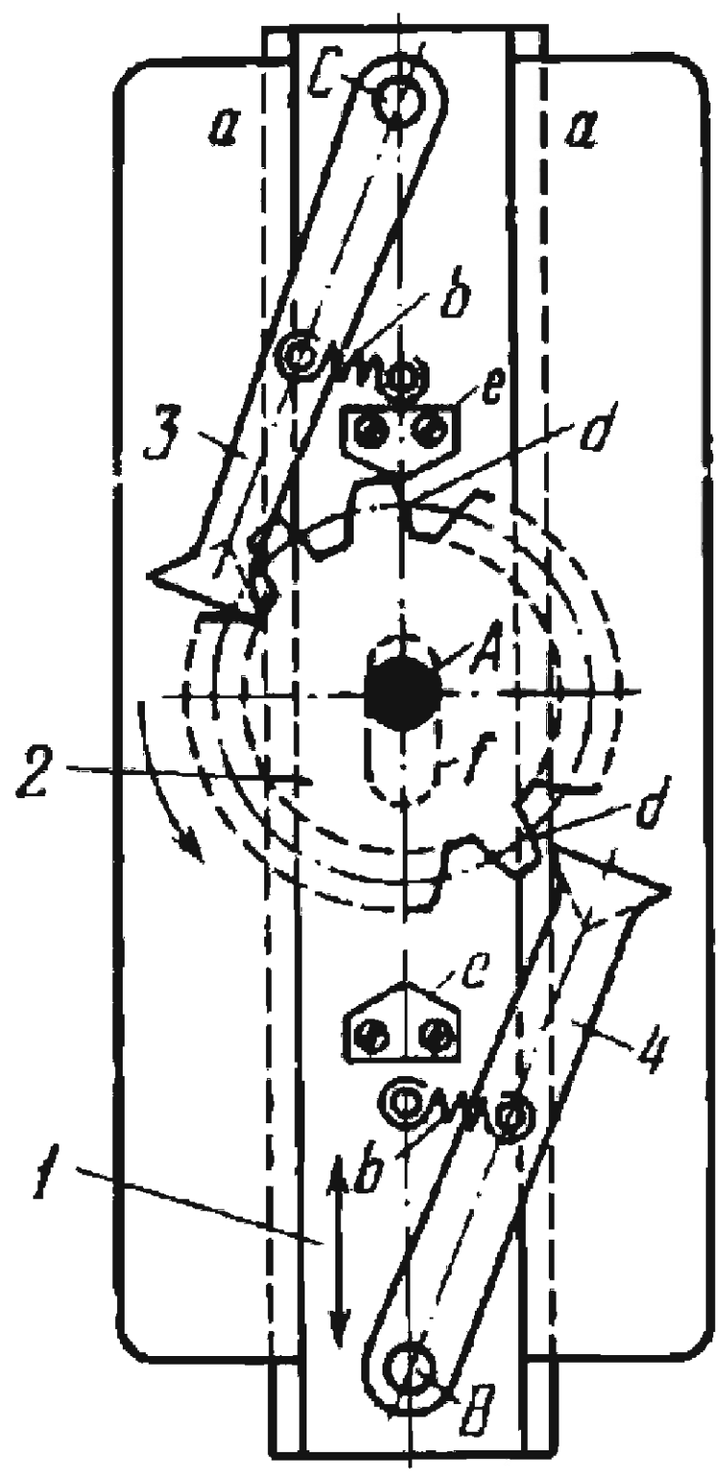

Link *1* reciprocates in fixed guides *a-a*. Pawls *3* and *4* turn about axes *C* and *B* of link *1*, alternately engaging teeth *d* of ratchet wheel *2* which rotates about fixed axis *A*. Pawls *3* and *4* are held in engagement by springs *b*. When link *1* reciprocates, it slides with its slot *f* on the hub of wheel *2*, and pawls *3* and *4* rotate the wheel intermittently counterclockwise. The pawls prevent wheel rotation in the reverse direction. Members *e* lock wheel *2* at the instants it is being engaged and disengaged by pawls *3* and *4*.

2731	PIN-RACK RATCHET-GEAR MECHANISM	RG ML

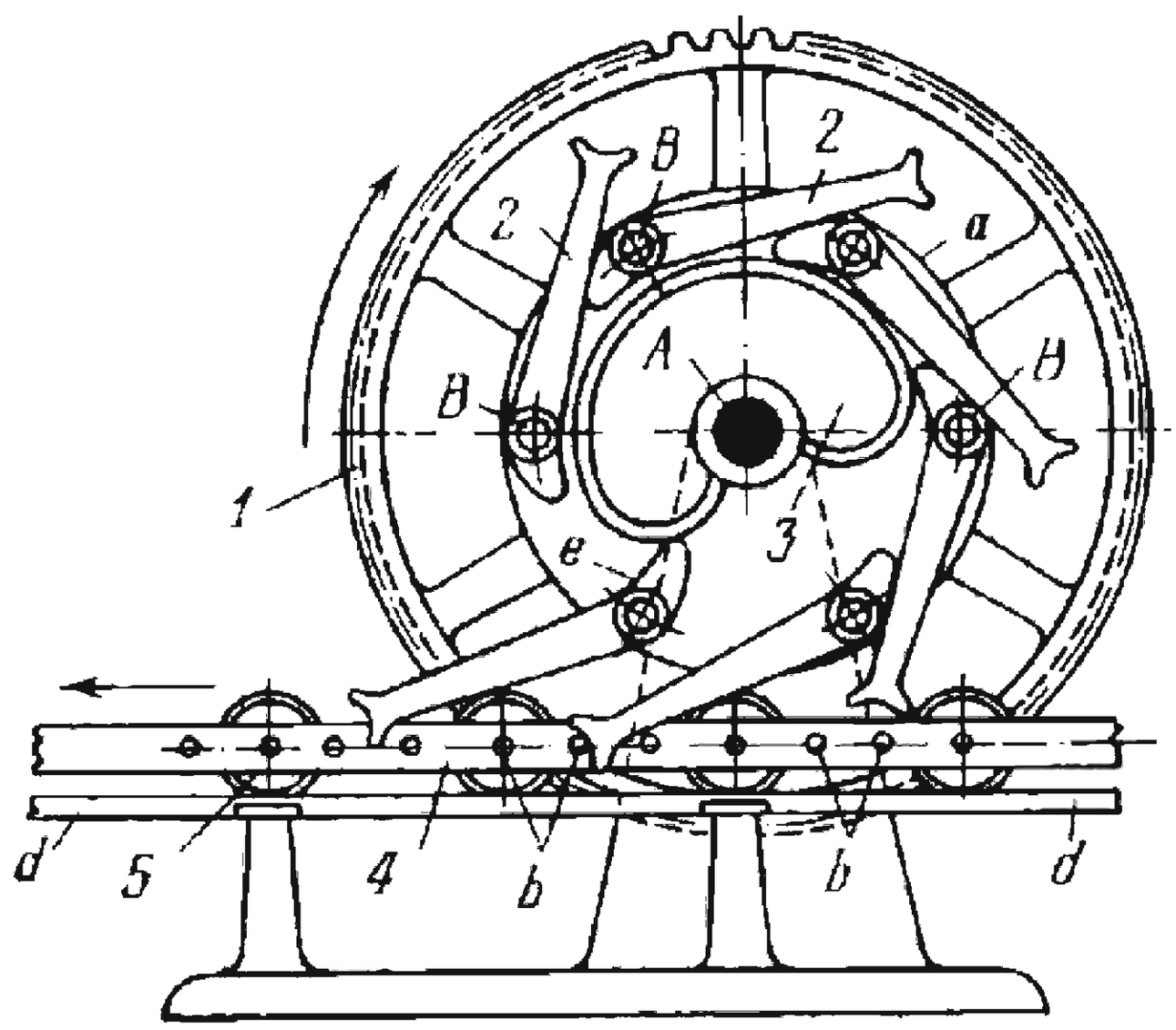

Gear *1* rotates clockwise about fixed axis *A* and carries rigidly attached disk *a*. Pawls *2* turn freely about axes *B* of disk *a* and consecutively engage pins *b* of rack *4* which rolls along fixed surface *d* on rollers *5*. When gear *1* rotates, pawls *2* move rack *4* to the left. Pawls *2* are lifted out of engagement and kept from overturning by fixed cam *3* along whose surface lugs *e* of the pawls slide.

2732	FOUR-PAWL-DRIVE RATCHET MECHANISM	RG ML

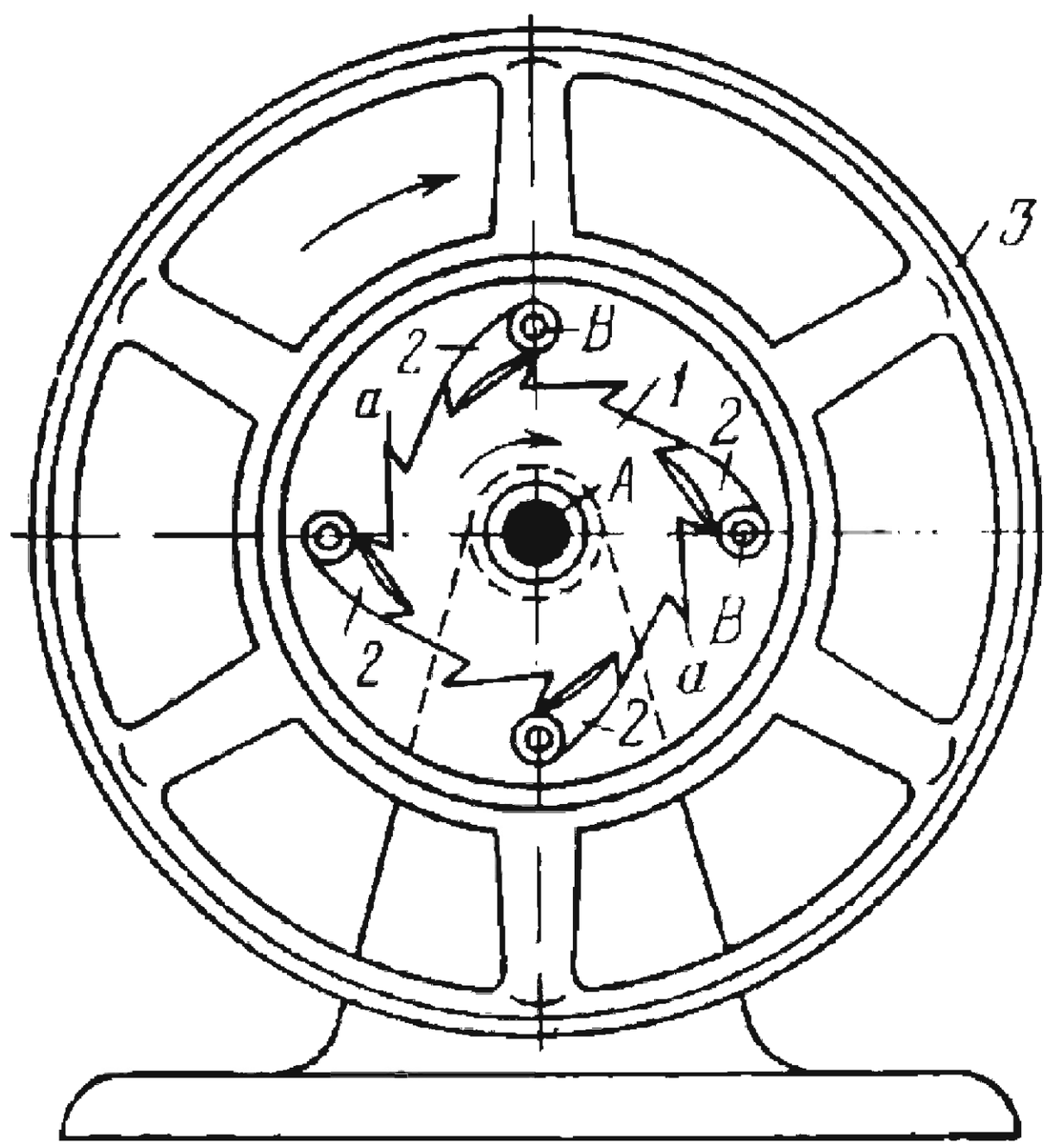

Ratchet wheel *1* rotates about fixed axis *A* and its teeth *a* engage four pawls *2* which turn about axes *B* of wheel *3*. Wheel *3* rotates freely about axis *A*. At least two pawls are in engagement simultaneously. When ratchet wheel *1* rotates clockwise, wheel *3* rotates in the same direction at the same angular velocity.

2733	RACK-AND-GEAR MECHANISM WITH RATCHET WHEELS	RG ML

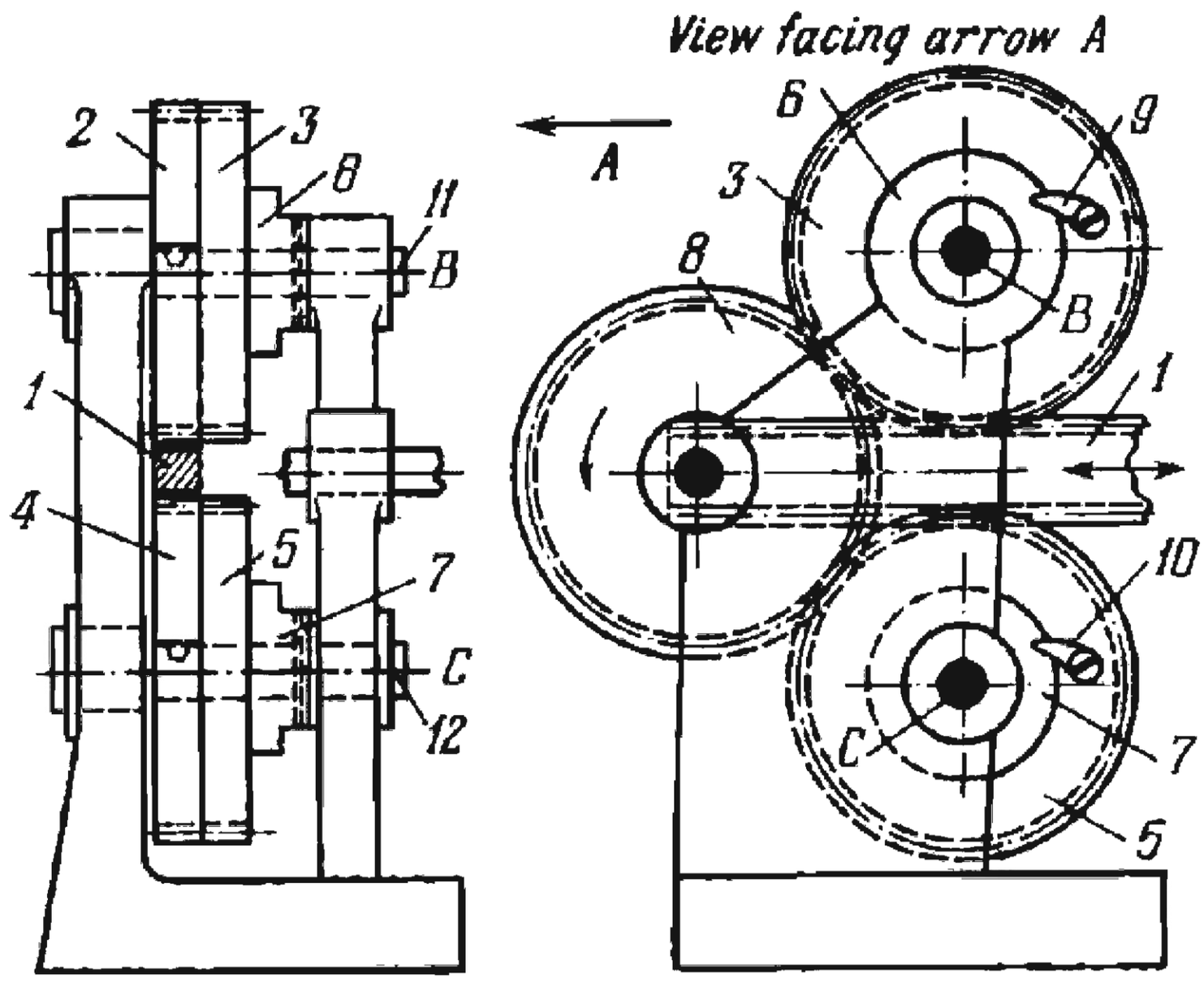

Gears *2* and *4* and ratchet wheels *6* and *7* are keyed on shafts *11* and *12* which rotate about fixed axes *B* and *C*. Pawls *9* and *10* are pivoted to gears *3* and *5* which rotate freely on shafts *11* and *12*. Rack *1* has teeth on opposite sides which mesh with gears *2* and *4*, rotating them alternately in each direction as rack *1* reciprocates. These rotating motions are transmitted to ratchet wheels *6* and *7* and alternately through pawls *9* and *10* to gears *3* and *5*. When rack *1* travels to the left, gear *2* and ratchet wheel *6* rotate clockwise, engaging pawl *9* which rotates gear *3* clockwise and gear *8*, with which it meshes, counterclockwise. At the same time, gear *4* and ratchet wheel *7* rotate counterclockwise and pawl *10* rides over the ratchet teeth without transmitting rotation to gear *5*. When rack *1* travels to the right, clockwise rotation is transmitted to gear *5* and no rotation is transmitted to gear *3*. In either case, gear *8*, which meshes with gears *3* and *5*, rotates counterclockwise, but intermittently with short dwells at the ends of the rack strokes.

2734	PLANETARY RATCHET-GEAR MECHANISM	RG ML

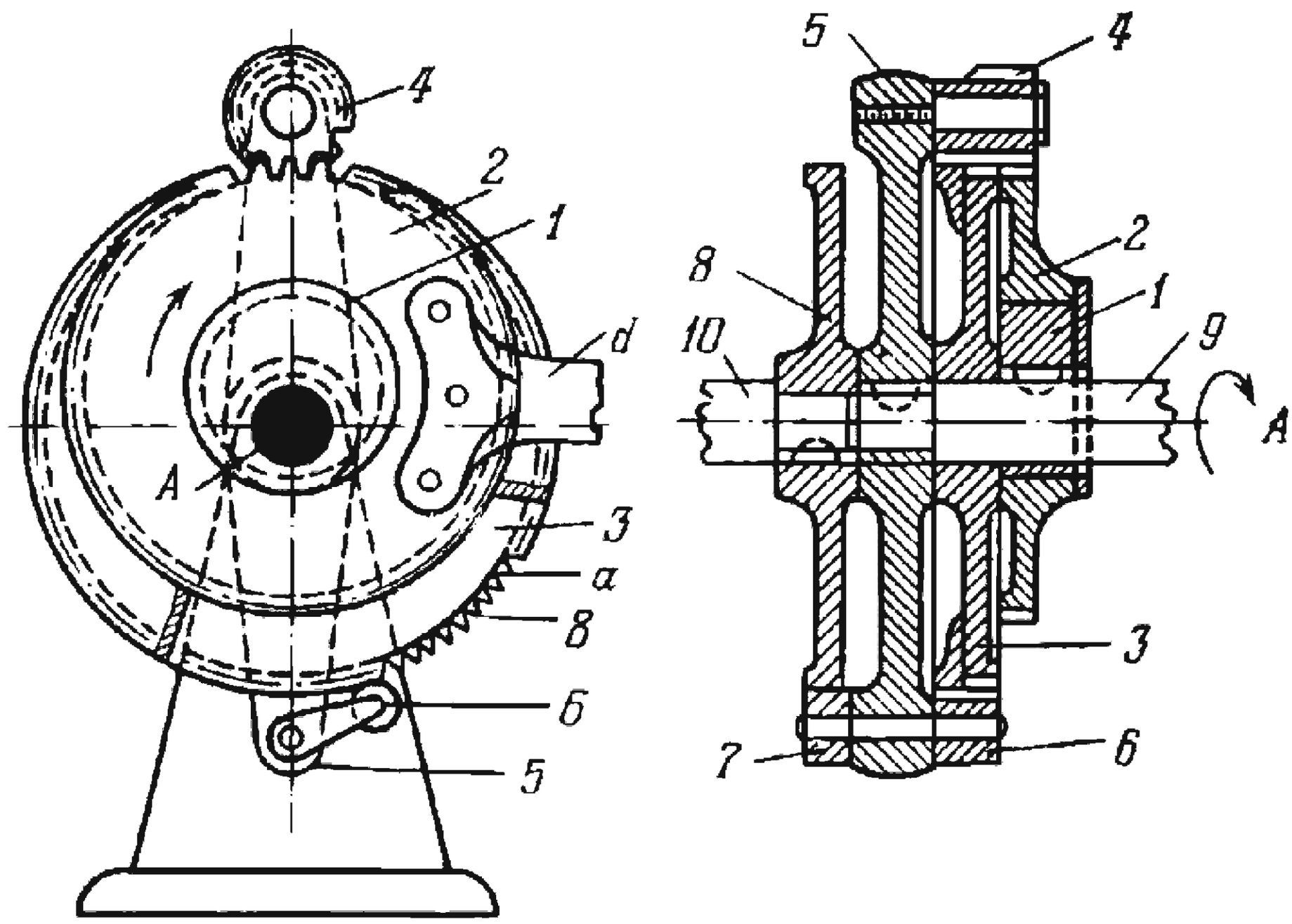

Round eccentric *1* is keyed to driving shaft *9* which rotates about fixed axis *A*. Gear *2* with 96 teeth is freely mounted on eccentric *1* but is prevented from rotating by lever *d*. Gear *3* with 120 teeth is freely mounted on shaft *9*. Gears *2* and *3* mesh with planet pinion *4*. Pinion *4* is carried by double-arm link *5* which is also keyed to driving shaft *9*. When driving shaft *9* rotates, gear *3* is rotated by pinion *4*. The transmission ratio is $i_{13} = \frac{120}{96} = \frac{5}{4}$. At the other end of link *5* is roller *6* which runs on a flange of gear *3*. This flange is circular and has a small depression *a* in the periphery. The size of depression *a* is such that when roller *6* drops, pawl *7*, rigidly mounted together with roller *6* on a pin, engages ratchet wheel *8*, keyed to driven shaft *10*. Each time the pawl engages the ratchet wheel, the latter is turned forward 1/12 revolution after which roll *6* runs on top of the flange again. Thus, when driving shaft *9* makes $1^1/_4$ revolutions, driven shaft *10* makes 1/12 revolution in the same direction.

2735	RATCHET-GEAR MECHANISM FOR PERIODICALLY VARIABLE ROTARY MOTION	RG ML

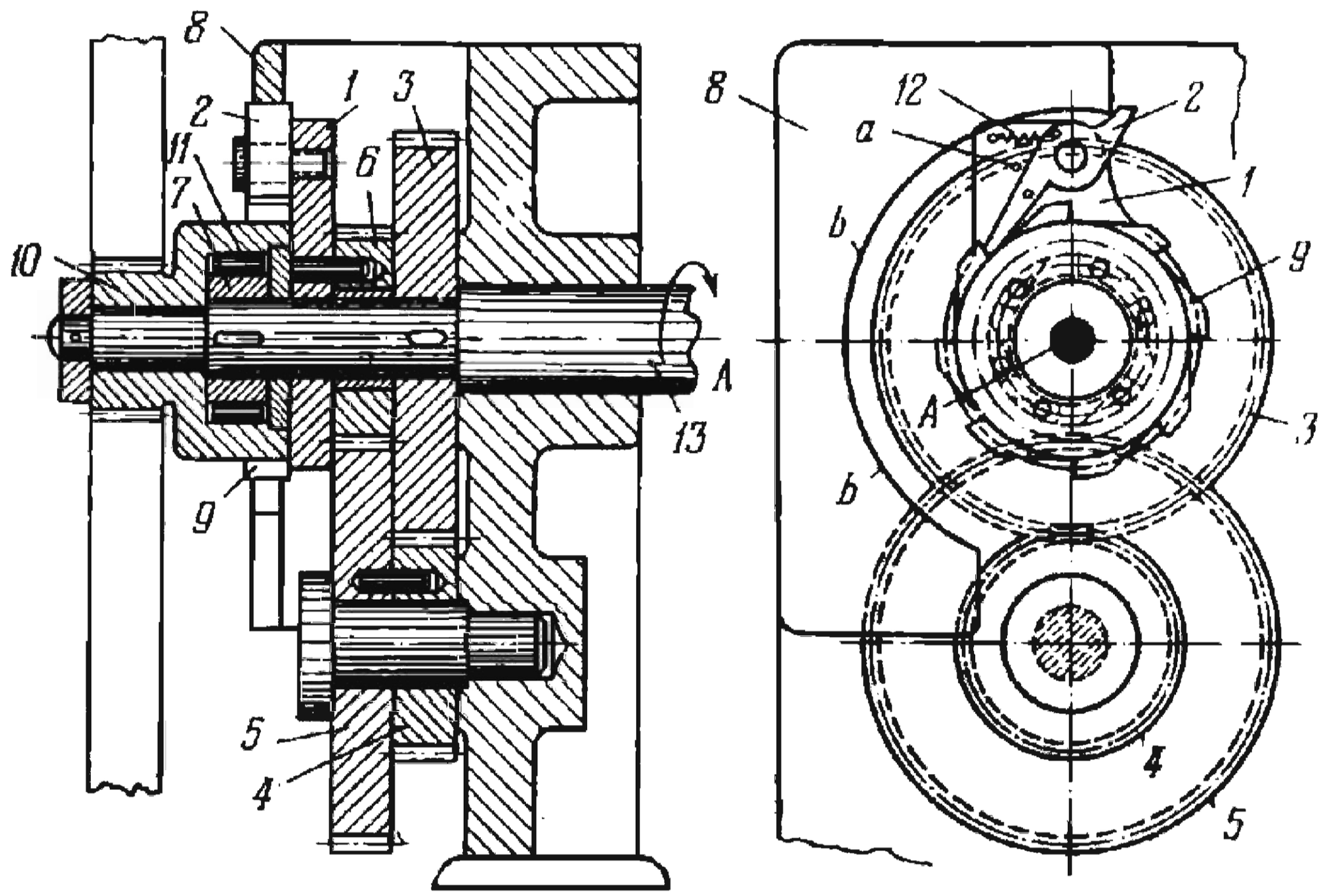

Plate *1*, to which pawl *2* is pivoted, is driven through gearing consisting of gears *3*, *4*, *5* and *6*. Gear *3* is keyed to driving shaft *13*, which rotates about fixed axis *A*, gears *4* and *5* are rigidly attached together and rotate on a fixed stud, and gear *6* is rigidly attached to plate *1* with which it rotates freely on shaft *13*. The action of pawl *2* is controlled by cam surface *b-b* of fixed cam *8*. Pawl *2* periodically engages ratchet wheel *9* which has pinion *10* at its left end and rotates freely on shaft *13*. Inside ratchet wheel *9* is a free-wheeling clutch consisting of rollers *11* and core *7* which is keyed to shaft *13*. Plate *1* rotates at a much higher speed than driving shaft *13*. When cam *8* lifts pawl *2* out of engagement with ratchet wheel *9*, the free-wheeling clutch becomes engaged and wheel *9* and pinion *10* are driven directly by shaft *13* at the lower speed. As pawl *2* leaves cam *8*, spring *12* brings it into engagement again with ratchet wheel *9* and pinion *10* begins to rotate at the higher speed. To obtain rotation of pinion *10* at constant velocity, pawl *2* is held out of engagement with ratchet wheel *9* by a pin inserted in a hole of the pawl and in hole *a* of plate *1*.

2736	LEVER-GEAR RATCHET MECHANISM WITH AN ELASTIC LINK	RG ML

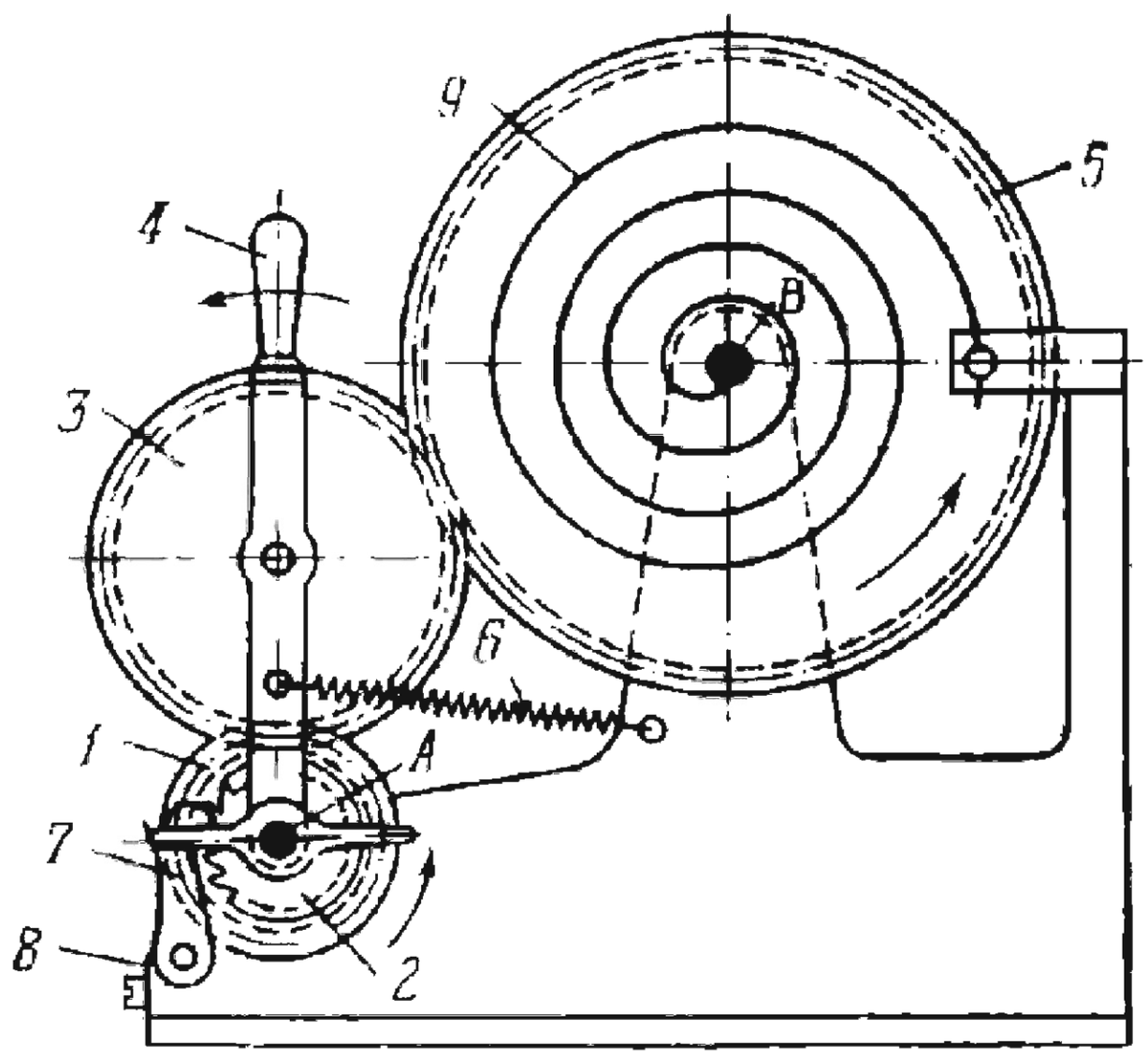

Gear *1* is rigidly attached to (or integral with) ratchet wheel *2* and rotates about fixed axis *A*. Gear *1* meshes with gear *3* which, in turn, meshes with gear *5*, rotating about fixed axis *B*. When gear *1* rotates counterclockwise, gear *5* rotates in the same direction and winds up spring *9*. The gears are held in engagement by lever *4* which carries gear *3* and spring *6*. Pawl *7* and spring *8* prevent wheel *2* and gears *1*, *3* and *5* from rotating in the reverse direction. Gear *5* is returned to its initial position by spring *9* when lever *4* is turned counterclockwise to disengage gear *3* from gear *5*.

2737	RATCHET-GEAR PLANETARY MECHANISM WITH AN ELASTIC LINK	RG ML

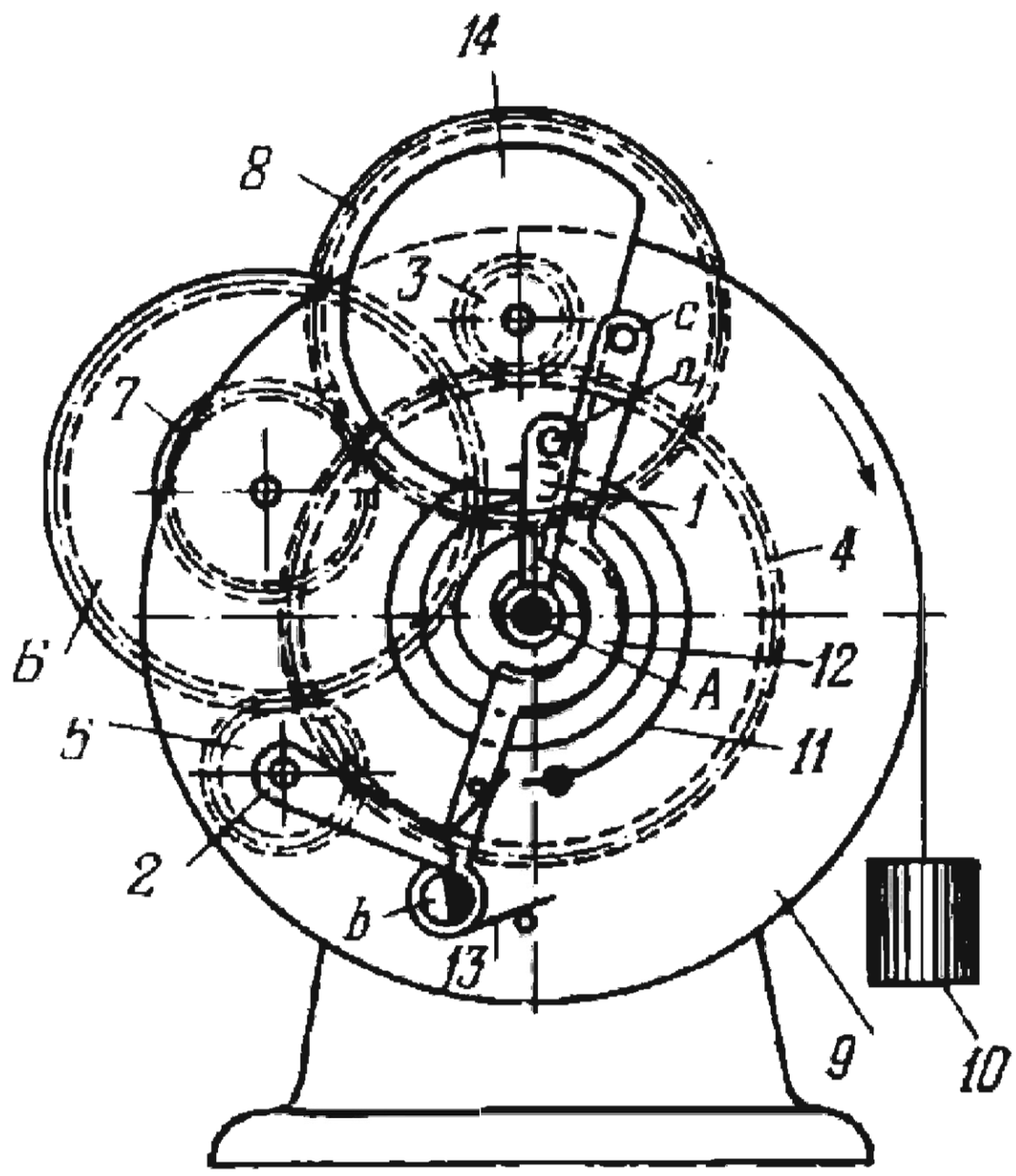

A clockwise torque is applied by weight *10* to disk *9* which rotates about fixed axis *A*. Pawl *2* is connected through gears *5*, *6*, *7* and *8* to planet pinion *3* which meshes with fixed sun gear *4*. Disk *9* is the carrier of the planetary gearing consisting of pinion *3* and gear *4*. Spiral spring *11* is attached to gear *4* and link *1* which carries pin *a*. Pin *a* engages link *12* which has braking surface *b* on its pivot. Spring *13* holds pin *c* of link *12* against cam *14* which is rigidly attached to pinion *3*. Spiral spring *11* turns link *1* which, in turn, turns link *12* and releases pawl *2*. At this disk *9* is turned by weight *10*. Pinion *3* rolls around gear *4* and makes one revolution about its axis after which pawl *2* again brakes the mechanism. At this, spring *11* is wound up because link *1* is stopped at the initial instant of rotation of disk *9* by a mechanism which is not shown.

2738	RATCHET-GEAR PLANETARY MECHANISM WITH AN ELASTIC LINK	RG ML

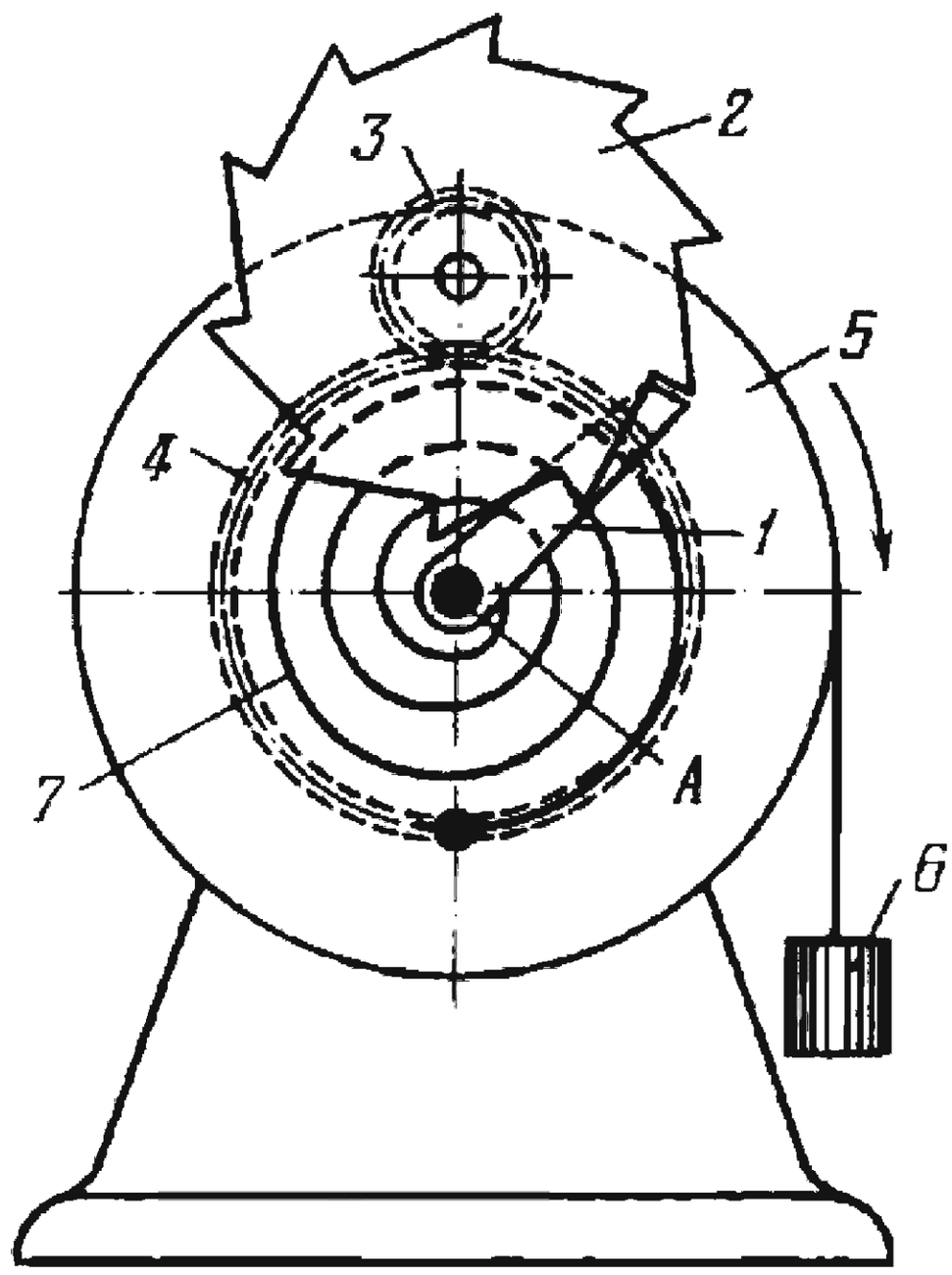

A clockwise torque is applied by weight *6* to disk *5* which rotates about fixed axis *A*. Ratchet wheel *2* is keyed with planet pinion *3* to a stud shaft. Pinion *3* meshes with fixed sun gear *5*, forming planetary gearing of which disk *5* is the carrier. One end of spiral spring *7* is attached to disk *5* and the other to link *1* which rotates about axis *A*. Spring *7* turns link *1* out of engagement with ratchet wheel *2*, allowing disk *5* to be turned by weight *6*. Pinion *3* continues to roll around gear *4* until ratchet wheel *2* engages link *1* which has been stopped beforehand by a device that is not shown. This winds up spring *7*.

2739	RATCHET-GEAR PLANETARY MECHANISM WITH AN ELASTIC LINK	RG ML

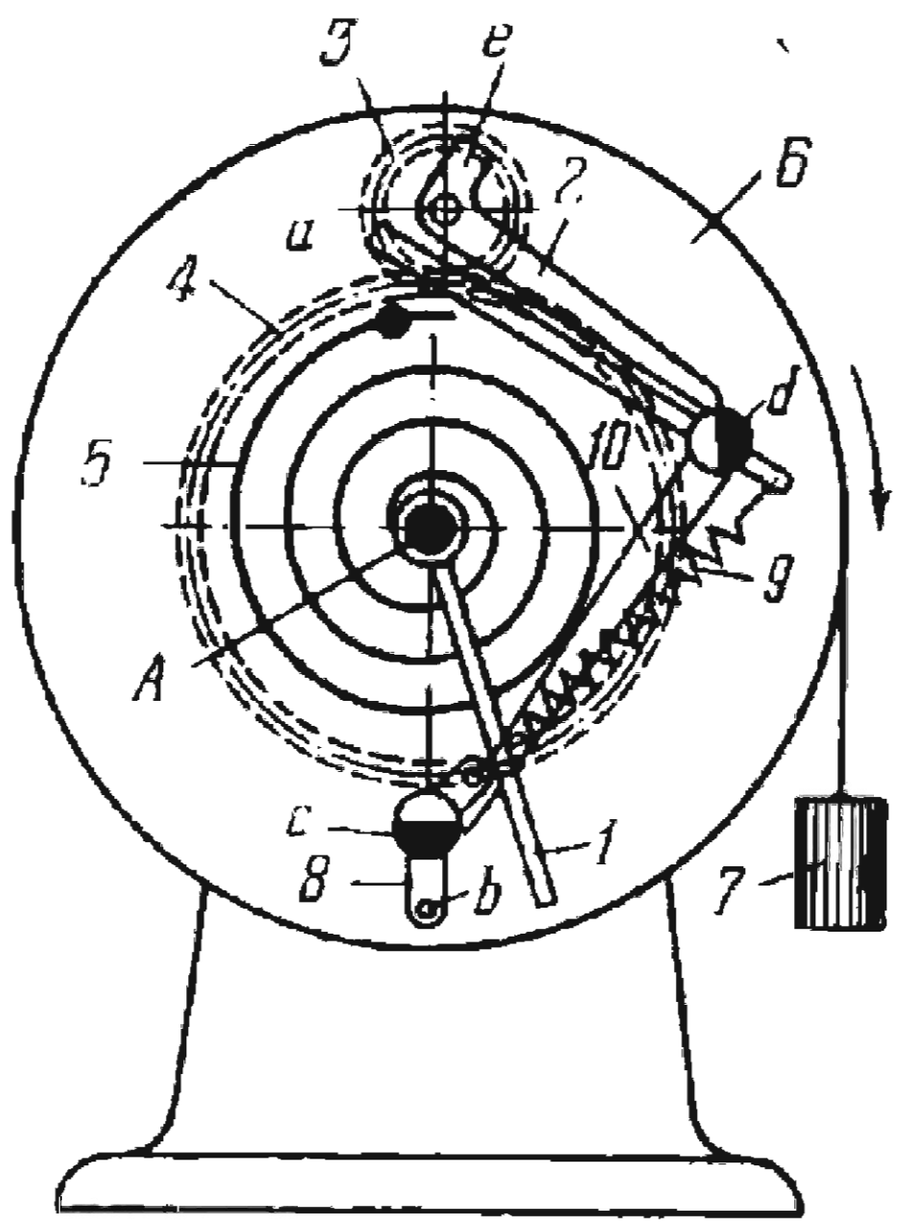

A clockwise torque is applied by weight *7* to disk *6* which rotates about fixed axis *A*. Pawl *2* is keyed with planet pinion *3* to a stud shaft. Pinion *3* meshes with fixed sun gear *4*, forming planetary gearing of which disk *6* is the carrier. One end of spiral spring *5* is attached to disk *6* and the other to link *1* which rotates about axis *A*. Spring *5* turns link *1* which, in turn, engages pin *b* of link *8* and turns this link. At this, link *10* is turned through a small angle by spring *9* and slides off braking surface *c* of link *8*. When link *10* turns, its braking surface *d* releases pawl *2*. This allows disk *6* to be turned by weight *7*, and pinion *3* makes one revolution in rolling around gear *4*. After this, arm *e* of pawl *2* engages arm *a* of link *10*, turning the link so that it again contacts braking surface *c* of link *8* which is stopped beforehand by a device that is not shown. As disk *6* rotates, it winds up spring *5*. After one revolution of pinion *3*, pawl *2* again brakes the mechanism.

2740	RATCHET-GEAR PLANETARY MECHANISM WITH AN ELASTIC LINK	RG ML

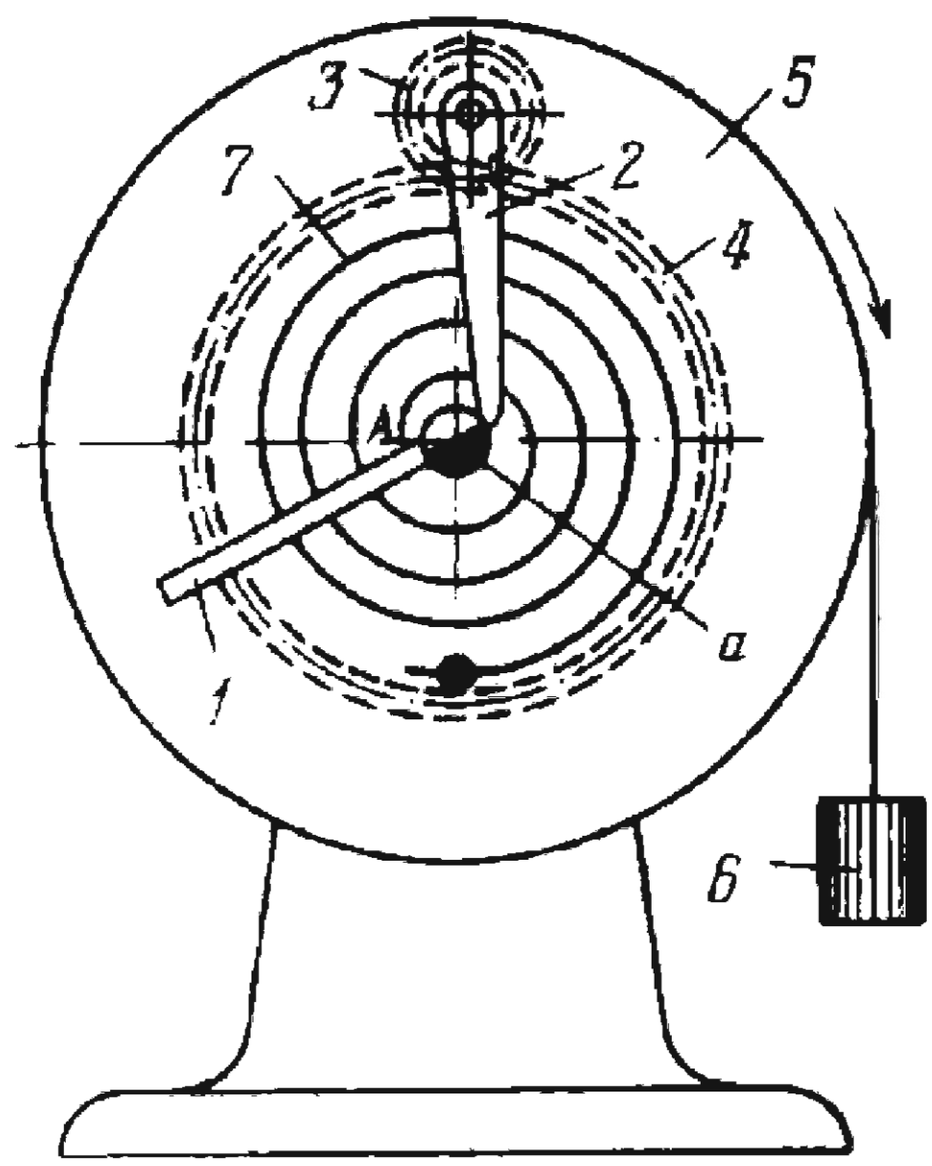

A clockwise torque is applied by weight *6* to disk *5* which rotates about fixed axis *A*. Pawl *2* is keyed with planet pinion *3* to a stud shaft. Pinion *3* meshes with fixed sun gear *4*, forming planetary gearing of which disk *5* is the carrier. Link *1* rotates about axis *A* and has braking surface *a* on one half of its hub circumference. One end of spiral spring *7* is attached to disk *5* and the other to link *1*. Spring *7* turns link *1* so that pawl *2* slides off braking surface *a*, allowing disk *5* to rotate. Pinion *3* rolls around gear *4* until pawl *2* again contacts the braking surface and stops rotation. At the same time, spring *7* is wound up because link *1* is stopped beforehand by a device that is not shown.

2741	DOUBLE-RATCHET DWELL MECHANISM	RG D

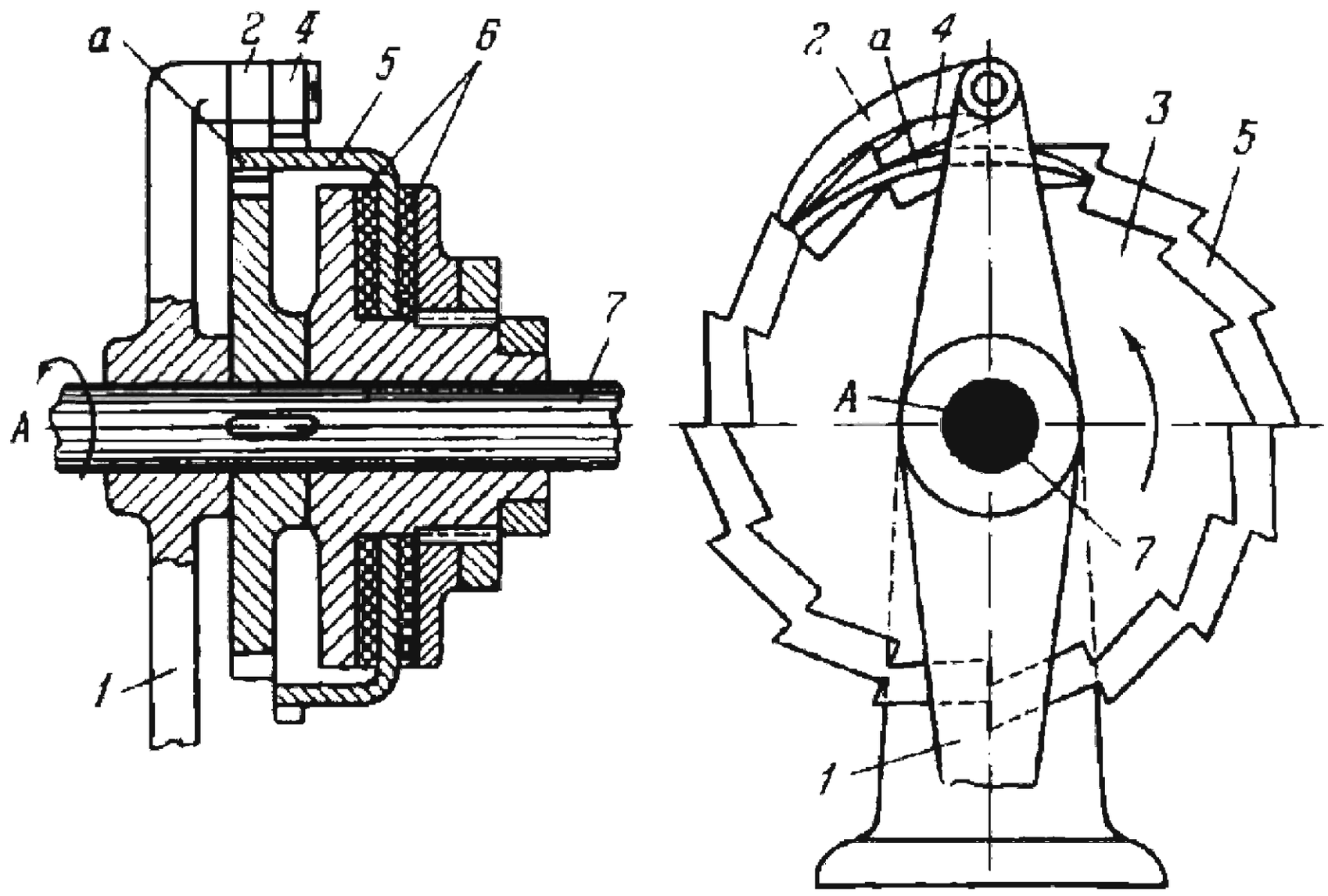

Lever *1* oscillates about fixed axis *A* and carries pawl *2* which engages the teeth of ratchet wheel *3*. Wheel *3* is keyed to shaft *7* and rotates it intermittently counterclockwise about axis *A*. Pawl *4*, also pivoted on lever *1*, engages the teeth of ratchet wheel *5* which is confined between leather friction disks *6* that can be adjusted to obtain the required pressure. Shield, or mask, *a*, carried on ratchet wheel *5*, prevents pawl *2* from engaging wheel *3* so that shaft *7* has a dwell until pawl *4* turns wheel *5* with shield *a* so that it no longer interferes with the action of pawl *2*.

2742	RATCHET-TYPE DWELL MECHANISM	RG D

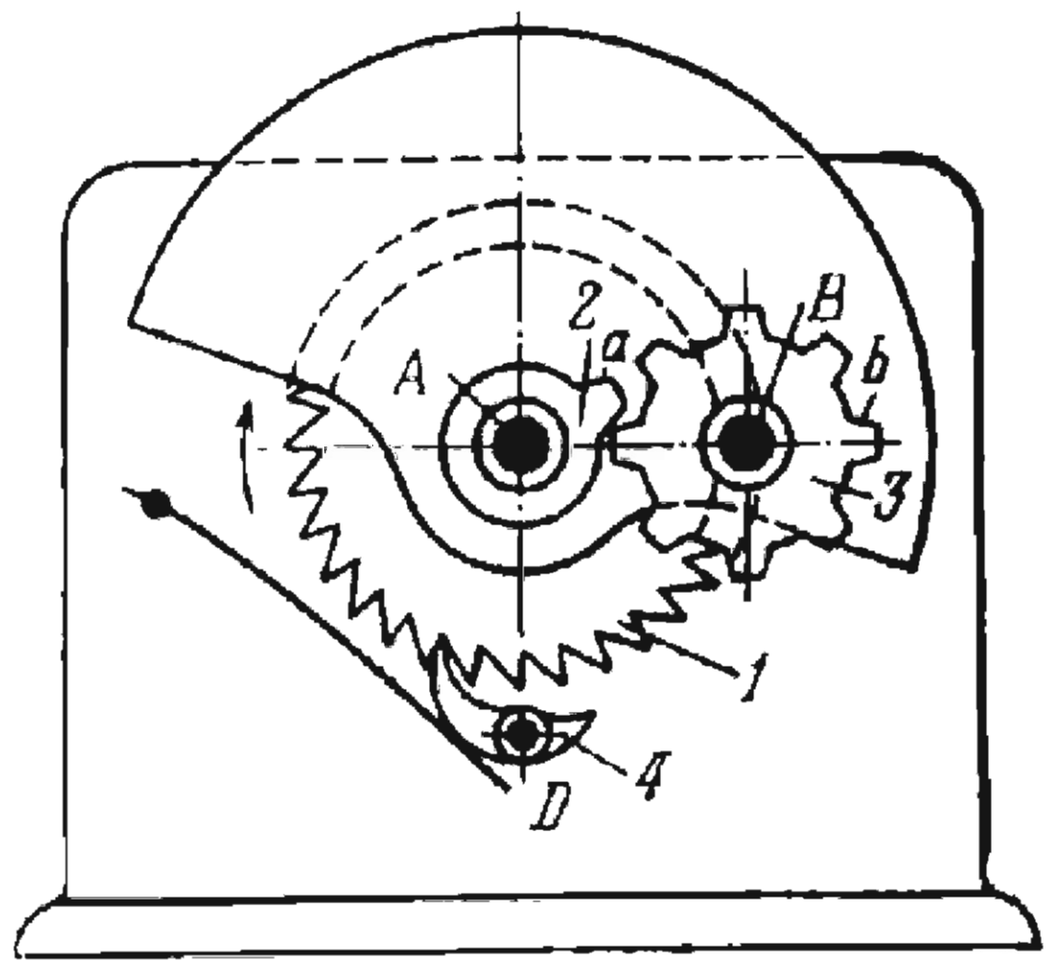

When ratchet wheel *1* rotates clockwise about fixed axis *A*, wheel *2*, having tooth *a* and being rigidly attached to wheel *1*, turns 8-tooth gear *3* about fixed axis *B*. When ratchet wheel *1* rotates eight revolutions, gear *3* makes one revolution, consisting of eight rotation and eight dwell periods. Pawl *4* turns about fixed axis *D* and prevents rotation of wheel *1* in the reverse direction.

2743	RATCHET-TYPE DWELL MECHANISM	RG D

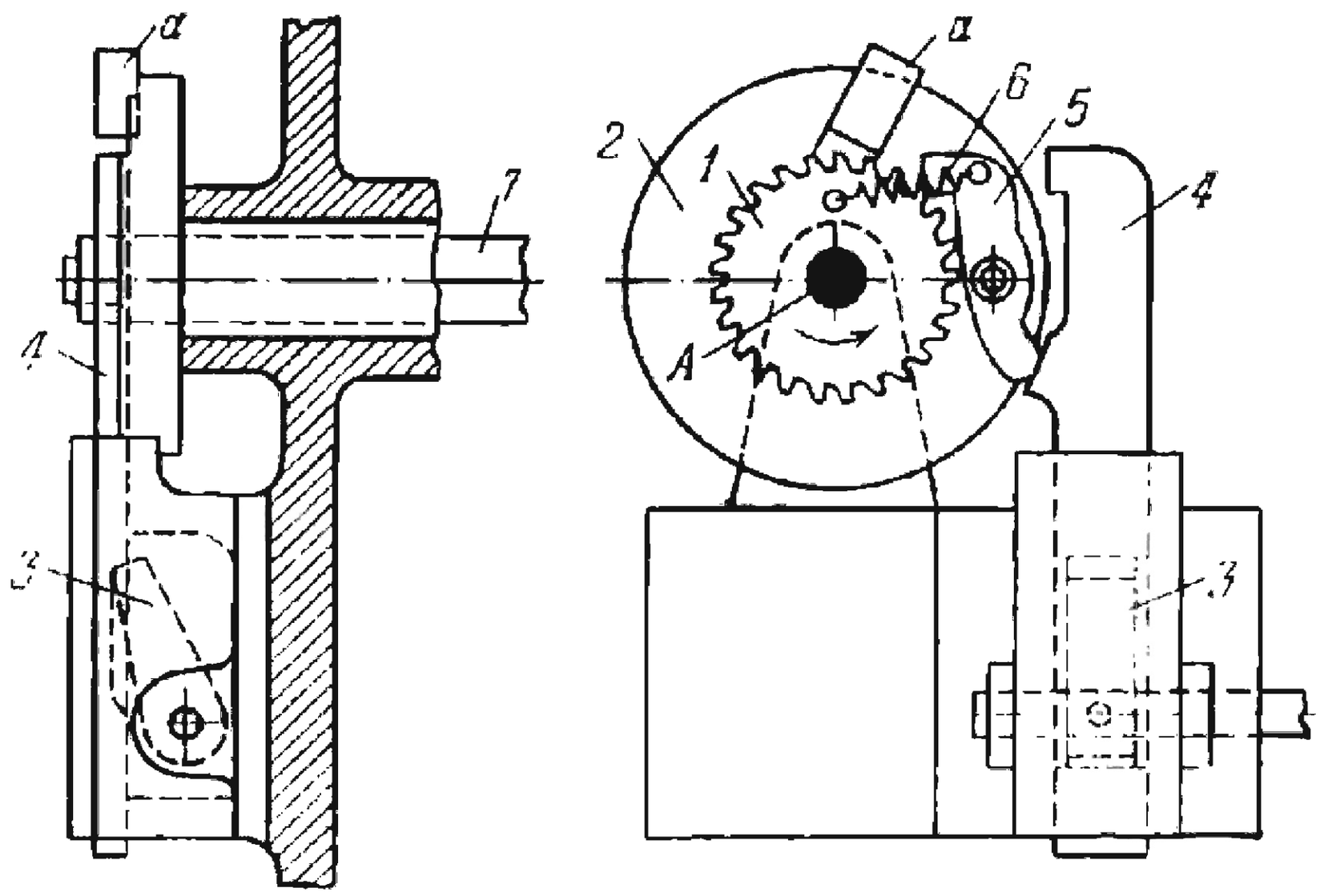

Continuous counterclockwise rotation of ratchet wheel *1*, keyed to shaft *7*, about fixed axis *A*, is converted into intermittent rotation through one full revolution at a time of disk *2* in the same direction and about the same axis. To start rotation of disk *2*, latch *3* is turned clockwise so that it releases bar *4* which drops down and releases the lower end of pawl *5*. This pawl is then turned by spring *6* into engagement with ratchet wheel *1*. Since pawl *5* is pivoted on disk *2*, the disk begins to rotate. Its rotation is restricted to one revolution by projecting lug *a* which engages the upper lug of bar *4* and lifts it so that latch *3* re-enters the notch in the bar. As disk *2* continues to rotate, the lower end of pawl *5* runs against the lower lug of bar *4* and is disengaged from ratchet wheel *1*. Disk *2* then stops until latch *3* is turned again.

2744	RATCHET-TYPE LONG-DWELL MECHANISM	RG D

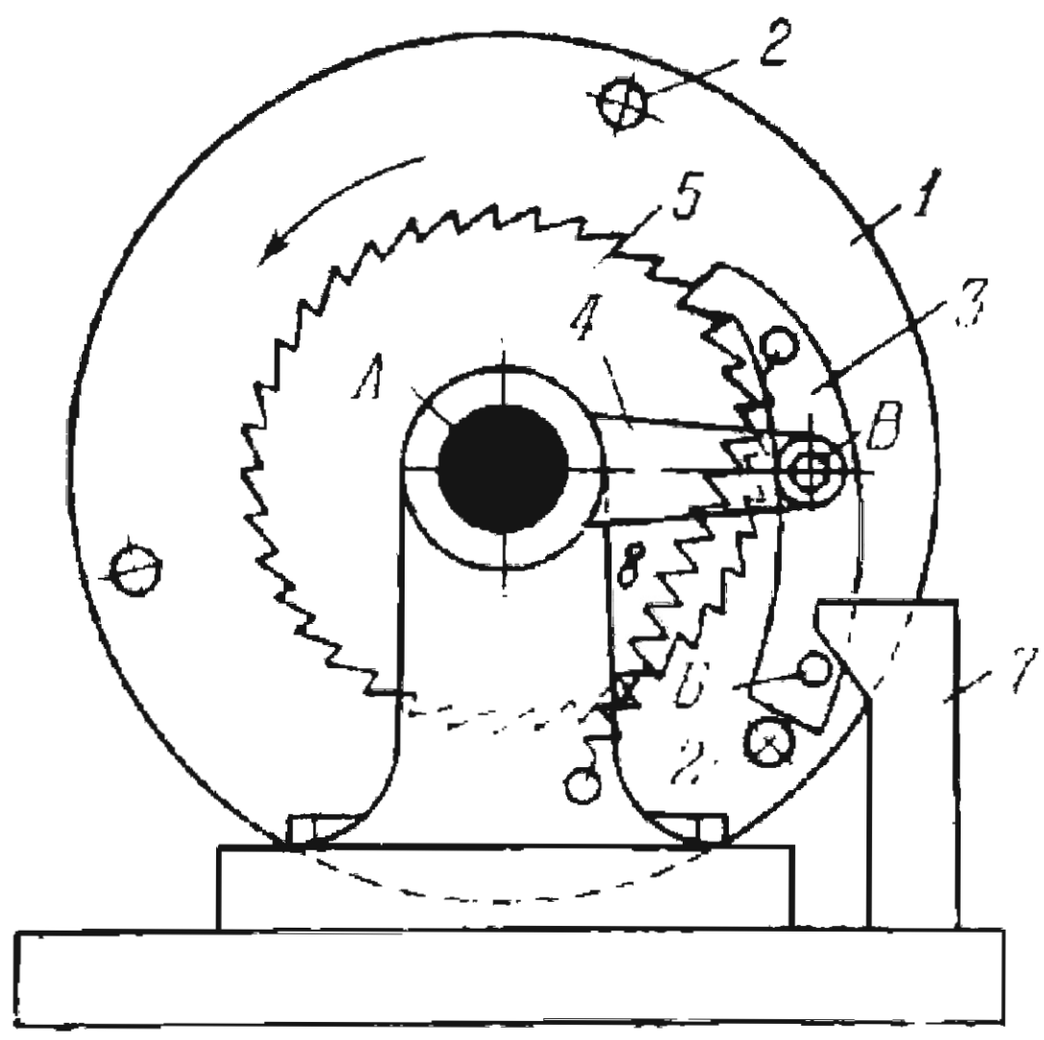

Disk *1* rotates continuously counterclockwise about fixed axis *A* and carries three equally spaced pins *2*. Pawl *3* is connected by turning pair *B* to lever *4* which turns freely about axis *A*. Driven ratchet wheel *5* rotates about axis *A*, independently of driving disk *1*. Spring *8* tends to keep pawl *3* engaged to wheel *5* with its other end in the path of pins *2*. As a pin *2* runs against pawl *3*, it rotates the pawl together with ratchet wheel *5*. This continues until pin *6* on pawl *3* engages fixed cam *7*, turning the pawl out of engagement with wheel *5* and allowing pin *2* to pass the pawl. Then wheel *5* has a dwell until the next pin *2* runs against the end of pawl *3*.

2745	RATCHET-TYPE DWELL MECHANISM FOR A SPROCKET-CHAIN CONVEYER	RG D

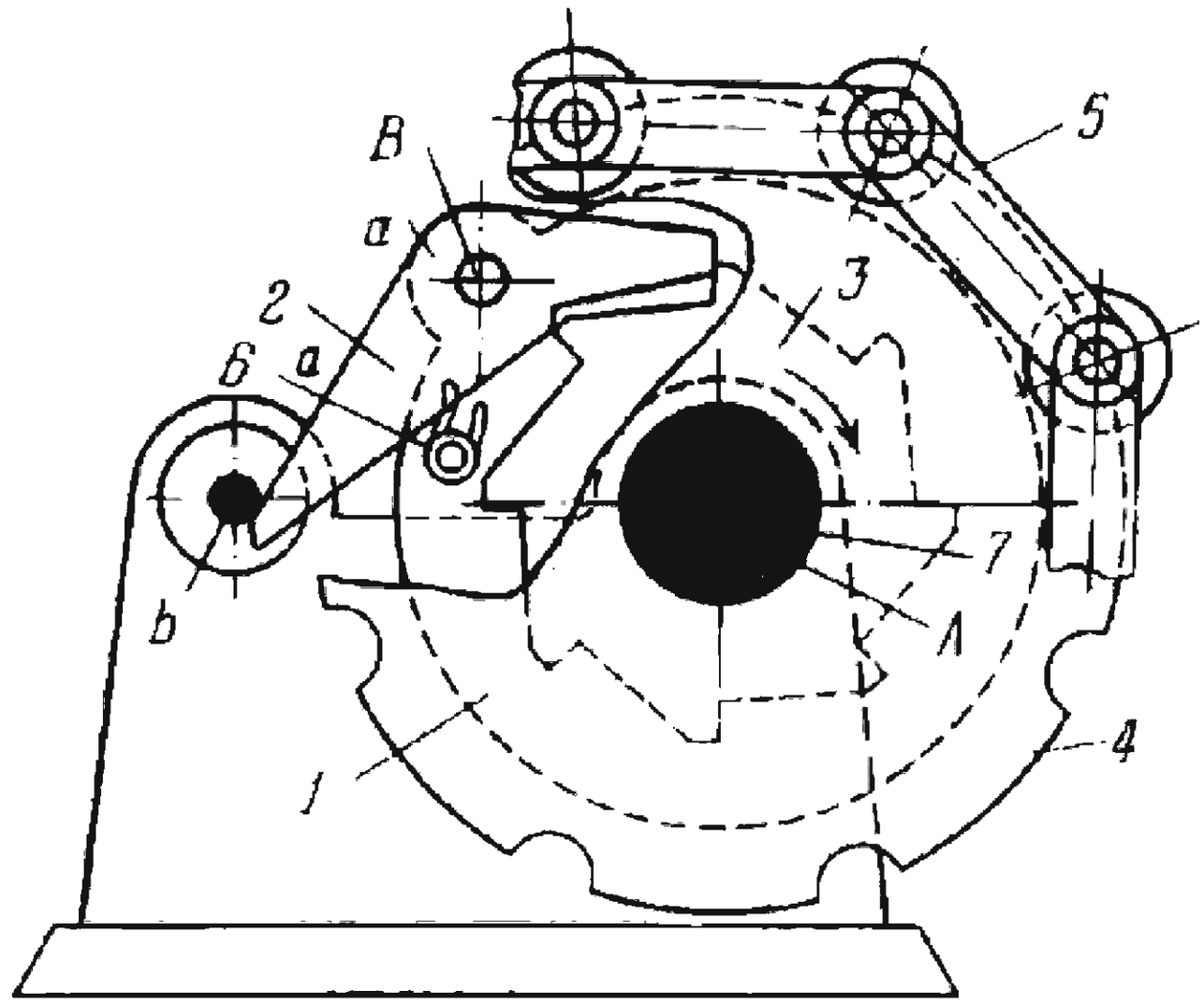

Sleeve *1* is keyed to driving shaft *7* which rotates continuously clockwise about fixed axis *A*. Pawl *2* is pivoted on sleeve *1* by turning pair *B*, and is brought into engagement with ratchet wheel *3* by spring *6*. Wheel *3* is rigidly attached to sprocket *4* which drives conveyer chain *5*. The wheel and sprocket are freely mounted on shaft *7*. As it rotates with sleeve *1*, pawl *2* runs against fixed pin *b* and is forced out of engagement with wheel *3* and sprocket *4* together with chain *5* dwells as long as surface *a-a* of pawl *2* slides along pin *b*. When pawl *2* passes the pin, it engages the next tooth of wheel *3*. This mechanism is applied in conveyers in which the dwell is used to load the conveyer.

2746	RATCHET-TYPE SPEED GOVERNOR MECHANISM OF CLOCKWORK WITH A FRICTIONAL-REST ESCAPEMENT	RG G

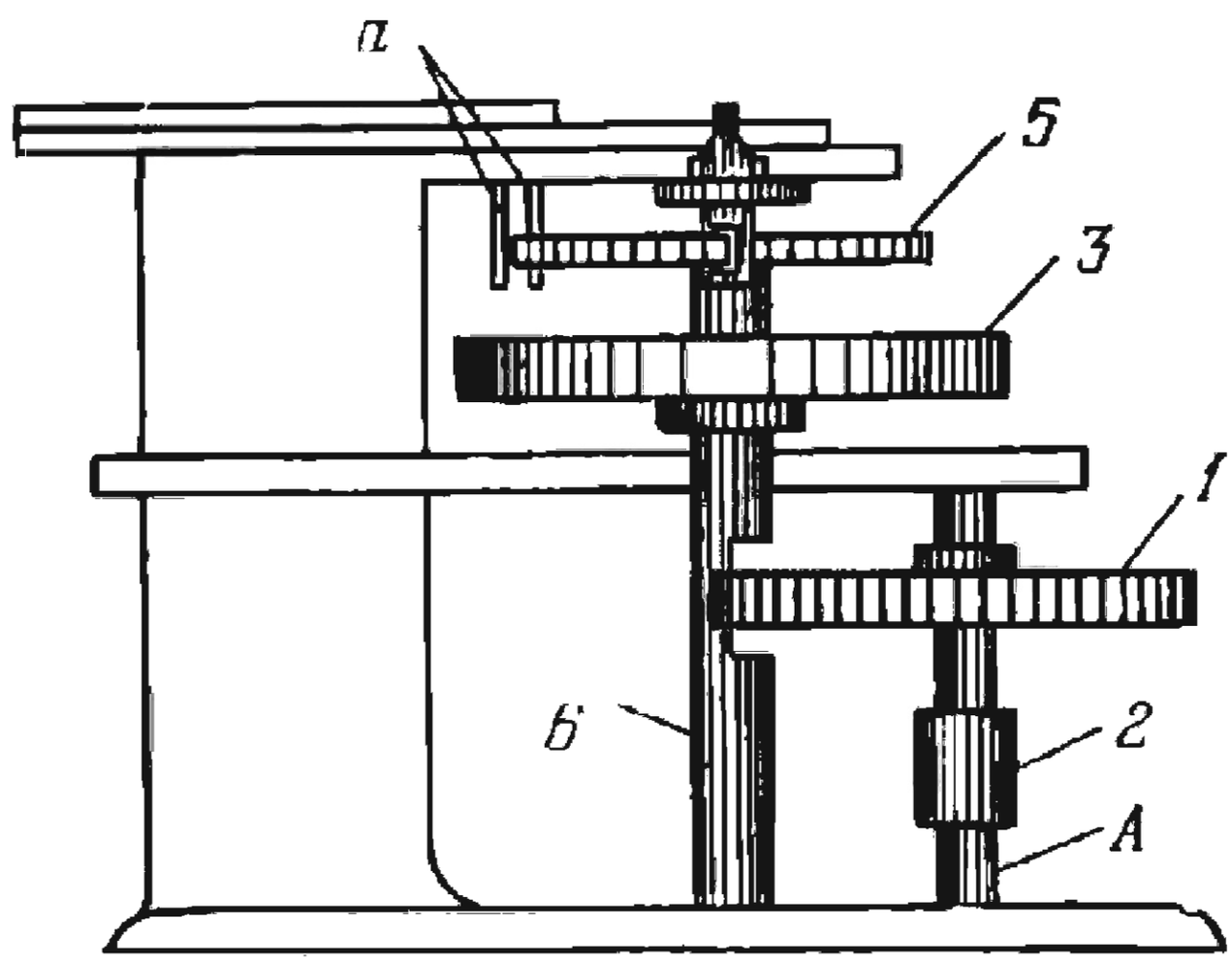

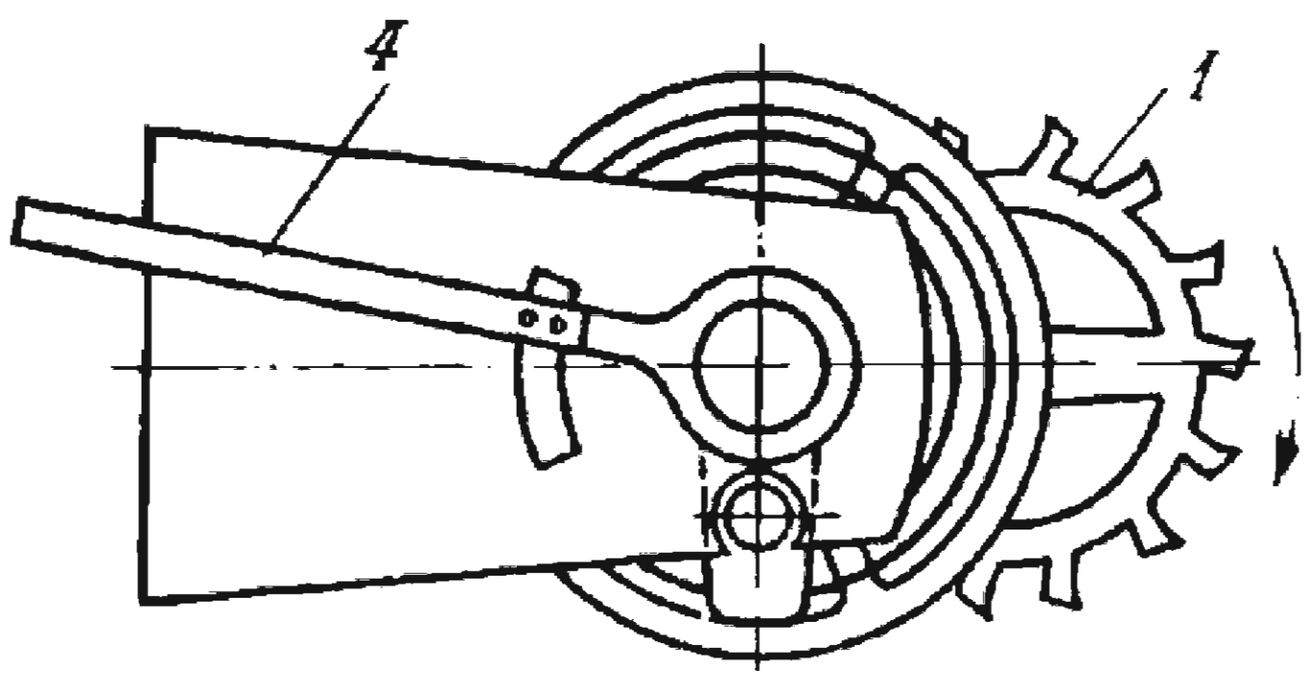

A clockwise torque is applied through pinion *2* to escape wheel *1* which is rigidly mounted on shaft *A*. Balance wheel *3* oscillates with a period that is regulated by lever *4* and two pins *a* between which the external turn of hairspring *5* passes. Hollow balance staff *6* has a notch whose edges form the engaging and disengaging pallets. At each swing of balance wheel *3*, a tooth of escape wheel *1*, engaging an edge of a pallet, gives an impulse to the balance, thereby maintaining its oscillation.

2747	RATCHET-TYPE SPEED GOVERNOR MECHANISM OF CLOCKWORK WITH A PIN PALLET ESCAPEMENT	RG G

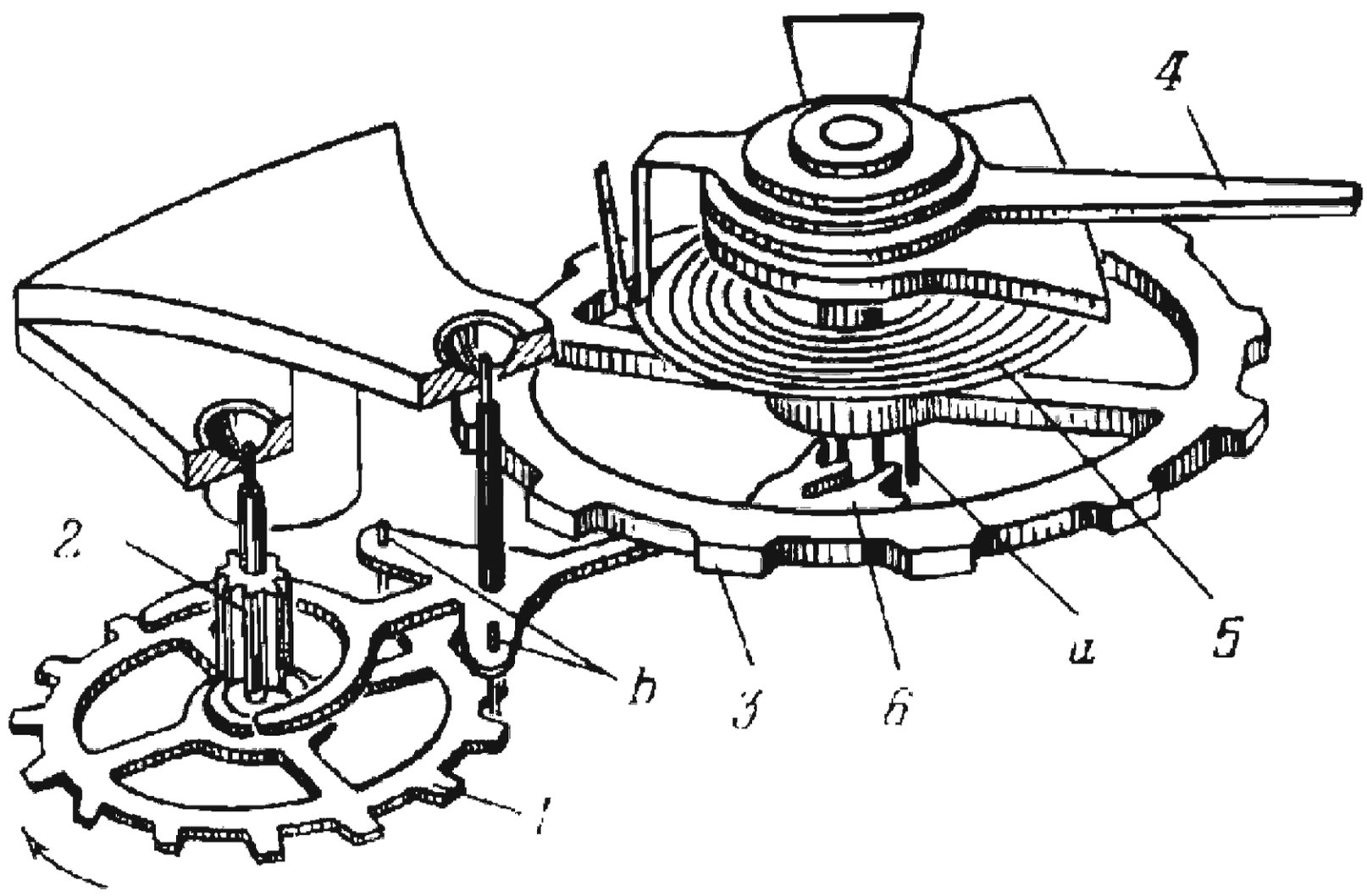

A clockwise torque is applied through pinion *2* to escape wheel *1*. Balance wheel *3* oscillates with a period that is regulated within certain limits by lever *4* which changes the active length of hairspring *5*. At each swing of balance wheel *3*, impulse pin *a*, press-fitted in a spoke of wheel *3*, engages a slot of the forked end *6* of the anchor and swings it from one extreme position to the other. At this, pin pallets *b* of the anchor allow escape wheel *1* to turn one half pitch. During this motion, the corresponding tooth of escape wheel *1* pushes pallet pin *b* transmitting an impulse to balance wheel *3*, thereby maintaining its oscillation.

2748	RATCHET-TYPE SPEED GOVERNOR MECHANISM WITH AN ELASTIC LINK	RG G

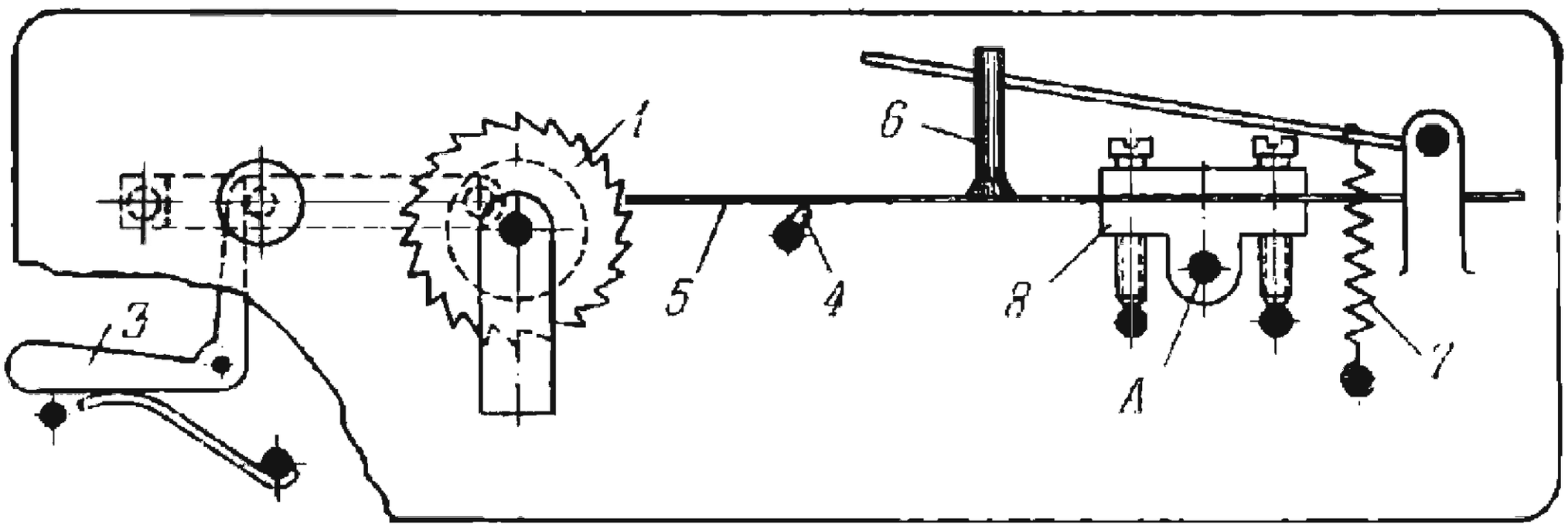

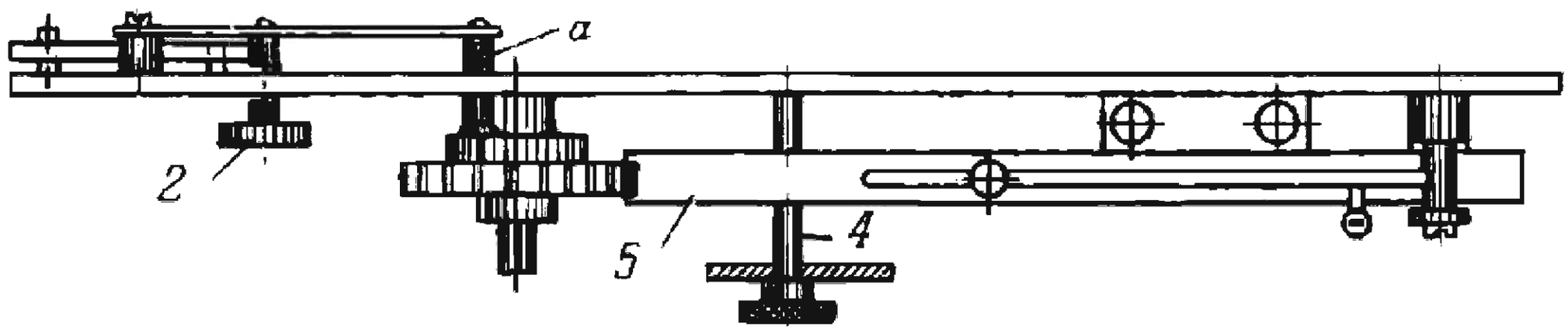

Ratchet wheel *1* is rotated by a drive mechanism (not shown). When button *2* is pressed, pin *a* is withdrawn so that it no longer brakes wheel *1*, and crank lever *3* enters a slot in the stem of button *2*, holding pin *a* in the withdrawn position. Ratchet wheel *1* begins to rotate at increasing speed. After a short acceleration to a speed not exceeding the normal value for the device, elastic strip *5* is released by turning lever *4*. As it comes into contact with the teeth of wheel *1*, strip *5* begins to oscillate. As it deviates downward, it strikes a tooth, braking the wheel and receiving an activating impulse. During one full oscillation (down and up) of strip *5*, wheel *1* turns through an angle corresponding to one tooth. The period and amplitude of oscillation of strip *5* is regulated by damper *6* with a felt tip which is held against the strip by spring *7*. The damper varies the active length of strip *5*. Vise *8* can be turned about fixed axis *A* to change the setting angle of strip *5*.

2749	ESCAPEMENT-TYPE GOVERNOR WITH A BALANCE	RG G

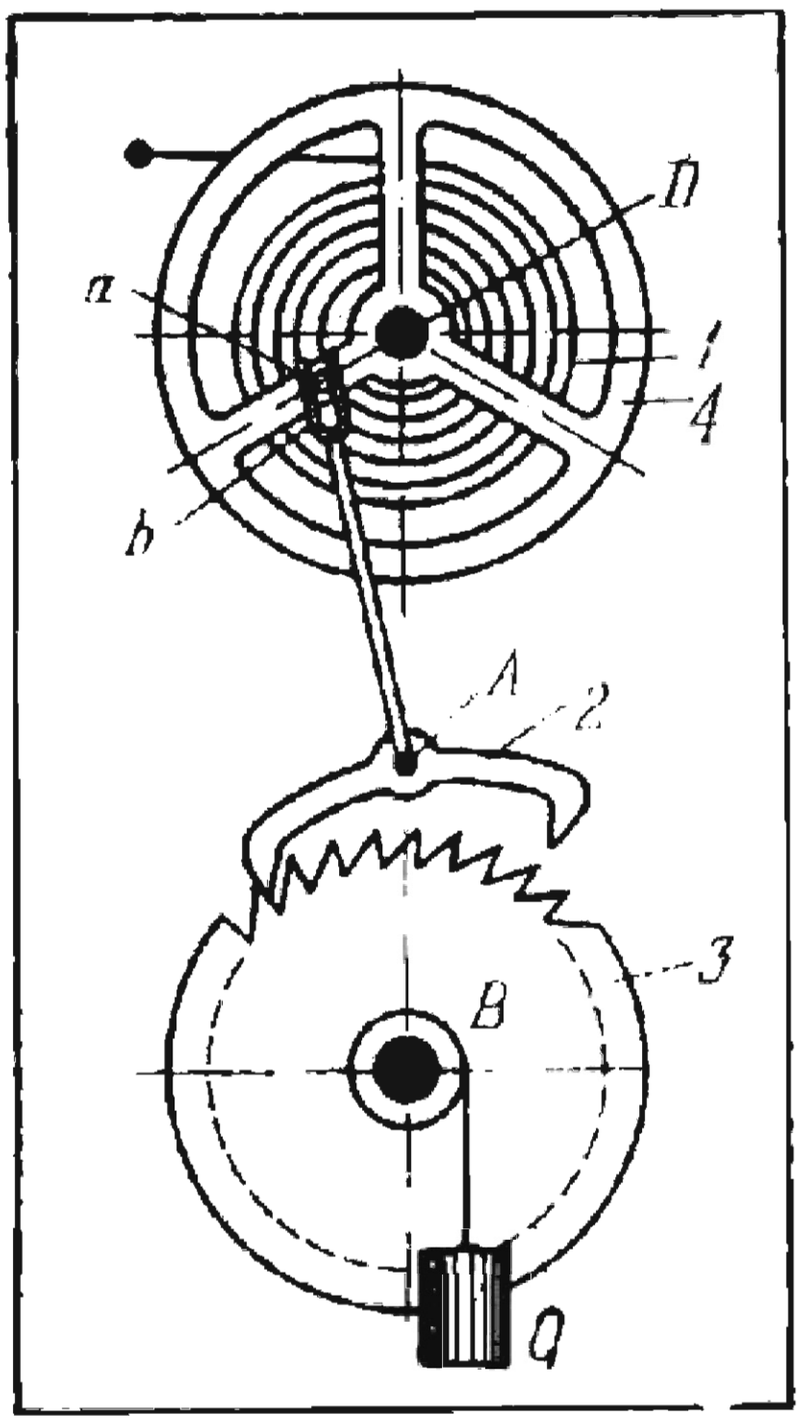

A clockwise torque about fixed axis *B* is applied to ratchet (escape) wheel *3* by weight *Q*. Balance (flywheel) *4* is oscillated about fixed axis *D* by the action of spiral hairspring *1* and has pin *a* sliding in fork *b* of anchor *2*. This oscillates anchor *2* about fixed axis *A* and its pallets allow intermittent rotation of escape wheel *3*.

2750	ESCAPEMENT-TYPE GOVERNOR WITH A PENDULUM	RG G

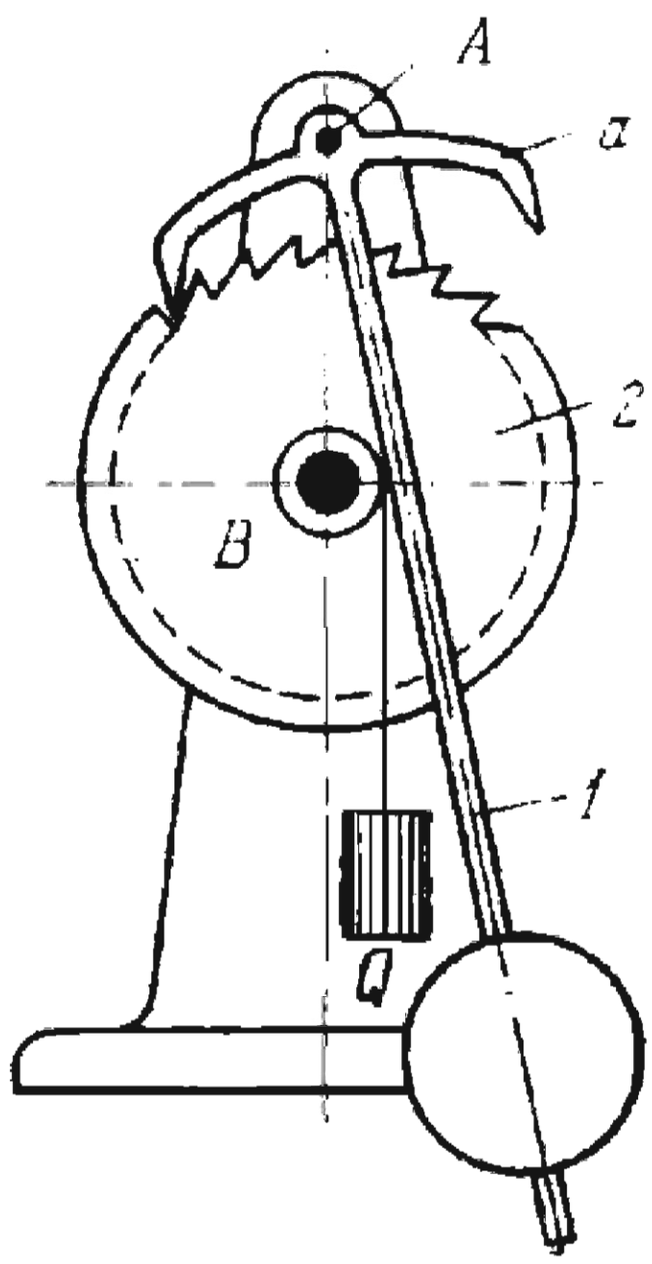

A clockwise torque about fixed axis *B* is applied to ratchet (escape) wheel *2* by weight *Q*. Pendulum *1* is integral with double-ended pawl (anchor) *a* and turns about fixed axis *A*. When pendulum *1* oscillates, escape wheel *2* rotates intermittently.

2751	ESCAPEMENT-TYPE GOVERNOR OF AN ALARM CLOCK	RG G

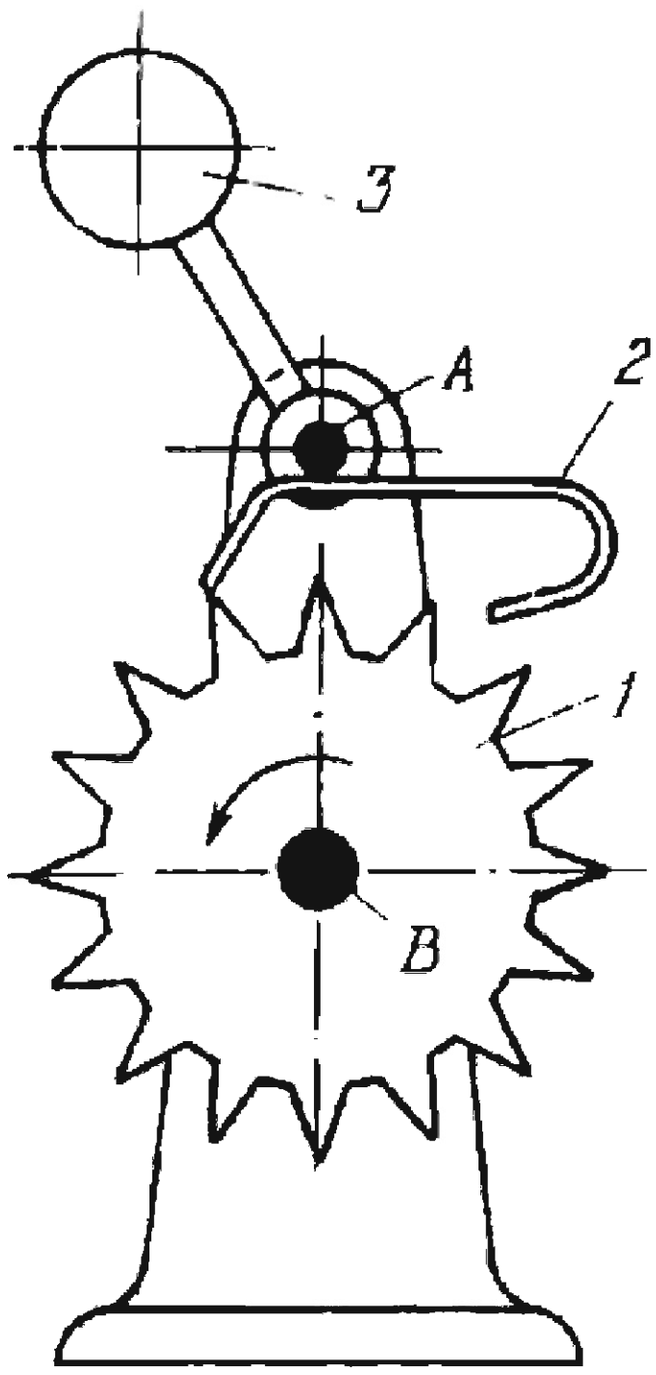

When ratchet (escape) wheel *1* rotates counterclockwise about fixed axis *B*, anchor *2* oscillates about fixed axis *A*. This motion is also used to drive striker *3* of the bell, rigidly attached to the anchor.

2752	ESCAPEMENT-TYPE ADJUSTMENT FOR SHUTTER EXPOSURE	RG G

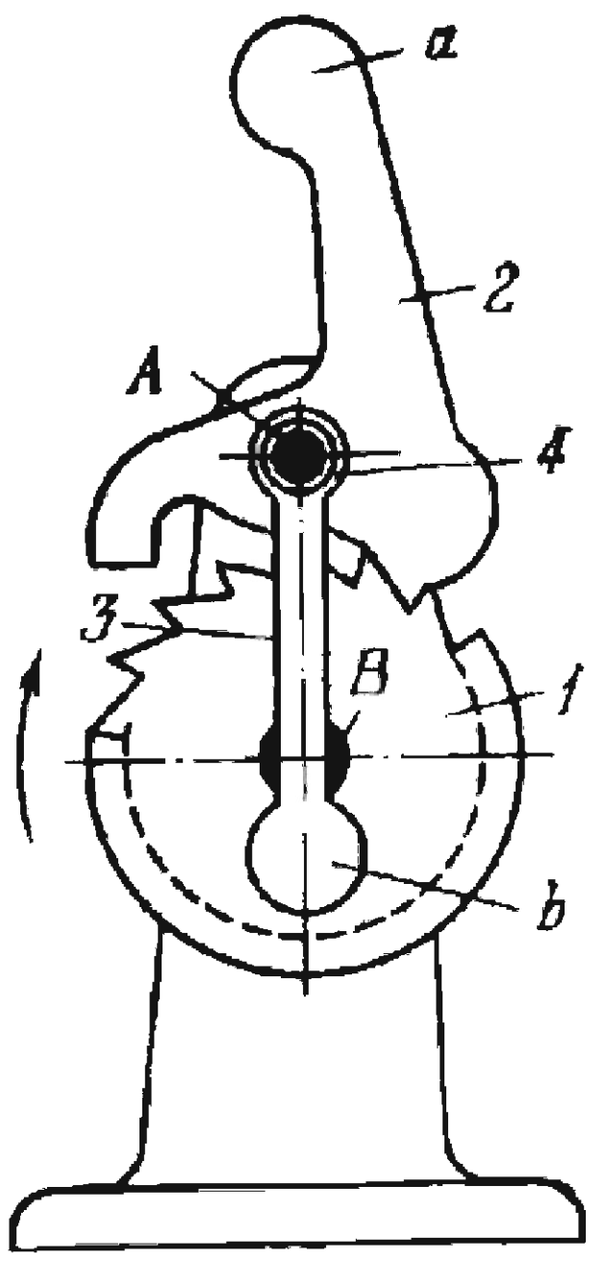

When ratchet (escape) wheel *1* is turned clockwise about fixed axis *B*, anchor *2* oscillates about fixed axis *A*. Weights *a* and *b* hold the anchor in equilibrium.

2753	RATCHET MECHANISM OF A CHRONOMETRIC TACHOMETER	RG M

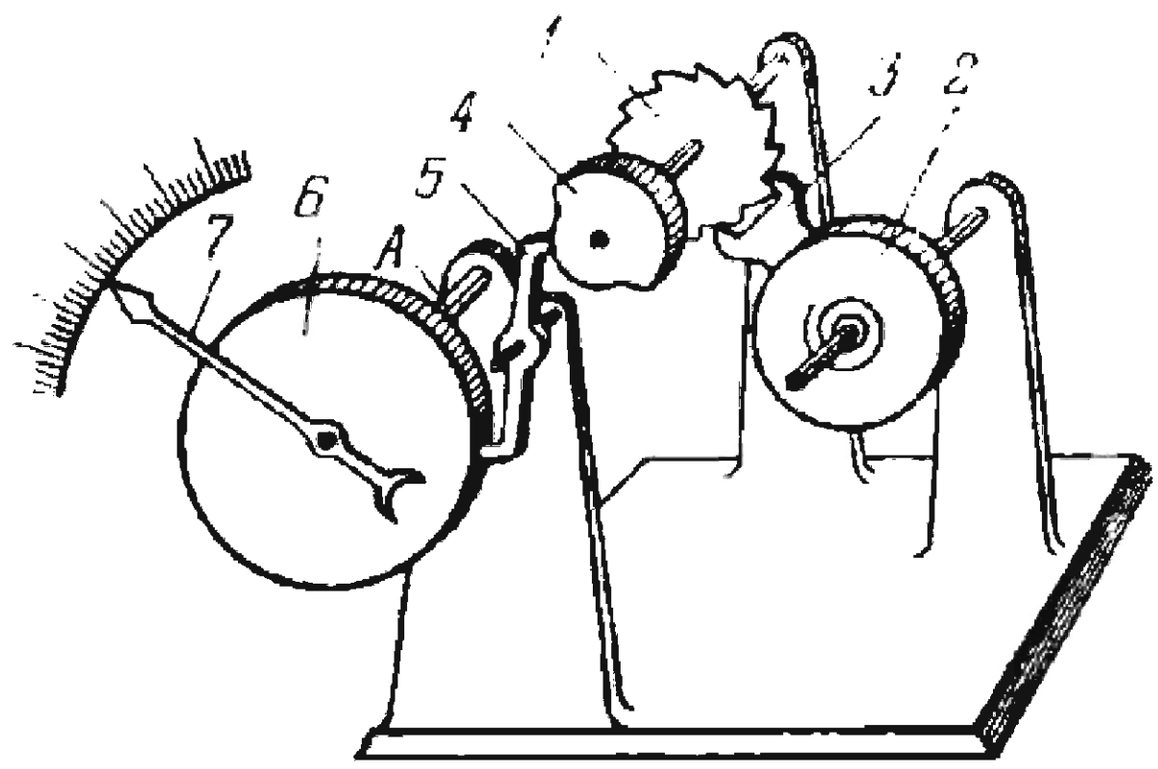

A chronometric tachometer, which measures the rpm of a shaft during three seconds, incorporates an element of clockwork. When a button (not shown) is pressed, ratchet wheel *1* begins to rotate. Its speed is controlled by balance wheel *2* and double-ended pawl *3*. Cam *4*, keyed to the shaft of wheel *1*, turns through a certain angle and then releases latch *5* for exactly three seconds. As a result, ratchet wheel *6* and hand *7*, connected by shaft *A* to the shaft whose speed is to be measured, turn for three seconds through the corresponding angle. The tachometer scale is graduated so that hand *7* indicates the number of shaft revolutions per minute rather than per three seconds.

2754	RATCHET MECHANISM WITH BALL-TYPE LOCKING ELEMENTS	RG SD

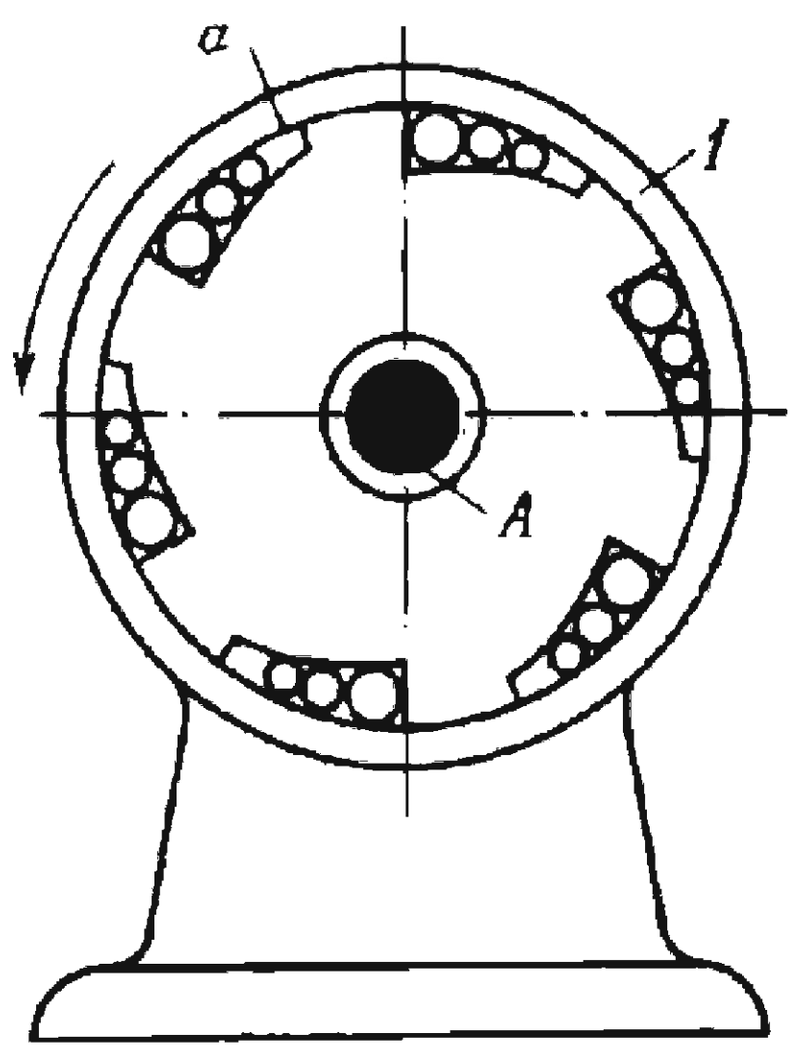

Housing *1* rotates only counterclockwise about fixed axis *A*. Rotation in the reverse direction is prevented by the balls which jam in wedge-shaped recesses *a*.

2755	DOUBLE-DETENT RATCHET MECHANISM	RG SD

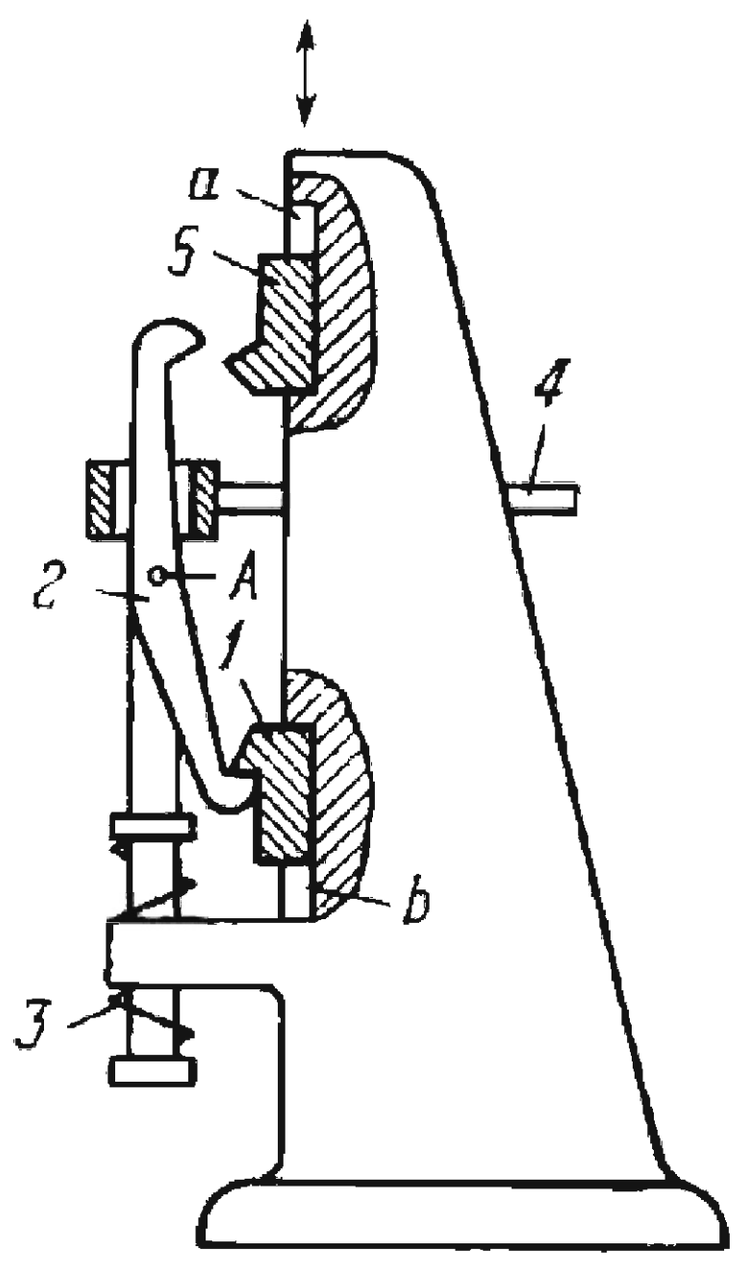

Link *1* is held in the position shown by double-ended pawl *2* and spring *3* while link *5* reciprocates along fixed guide *a*. When pawl *2* is switched over by turning it about axis *A* with lever *4*, link *5* is stopped and link *1* begins to reciprocate along fixed guide *b*.

2756	DOUBLE-DETENT RATCHET MECHANISM	RG SD

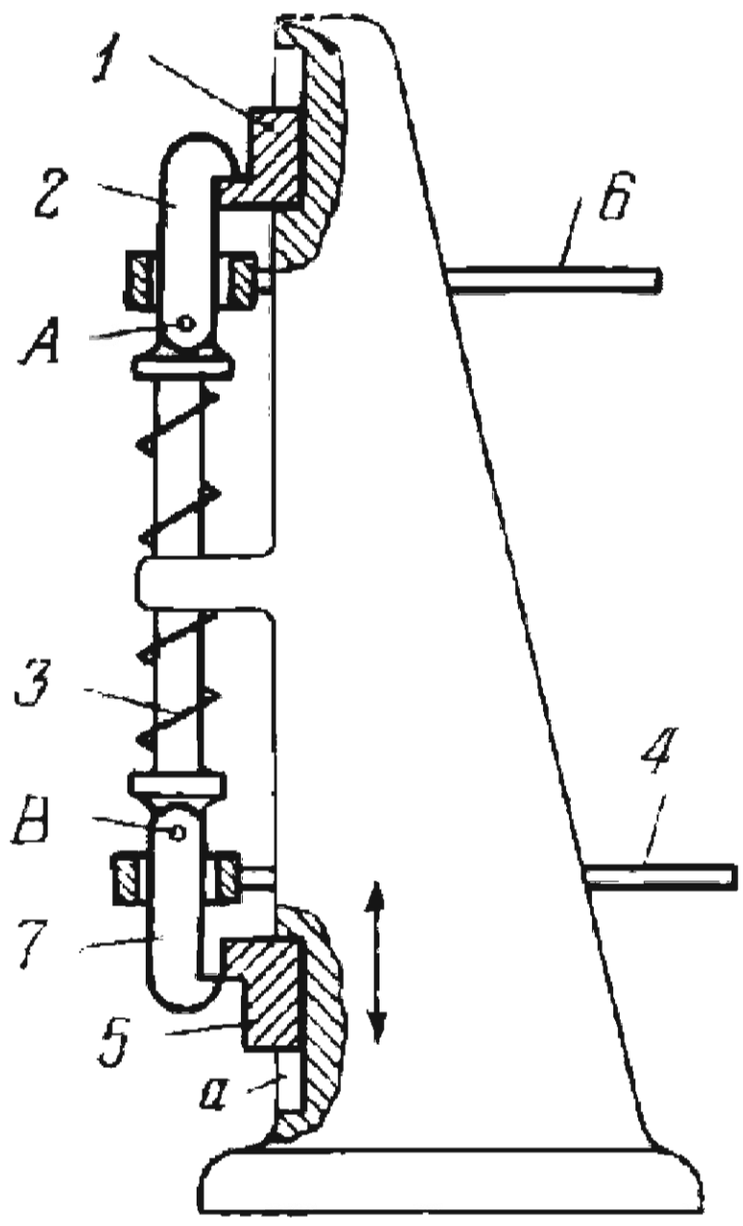

Link *1* is held in the position shown by latch *2* and spring *3* while link *5* reciprocates along fixed guide *a*. Links *1* and *5* can be locked or released independently of each other by means of levers *6* and *4* which turn latches *2* and *7* about axes *A* and *B*.

2757	DOUBLE-DETENT RATCHET MECHANISM	RG SD

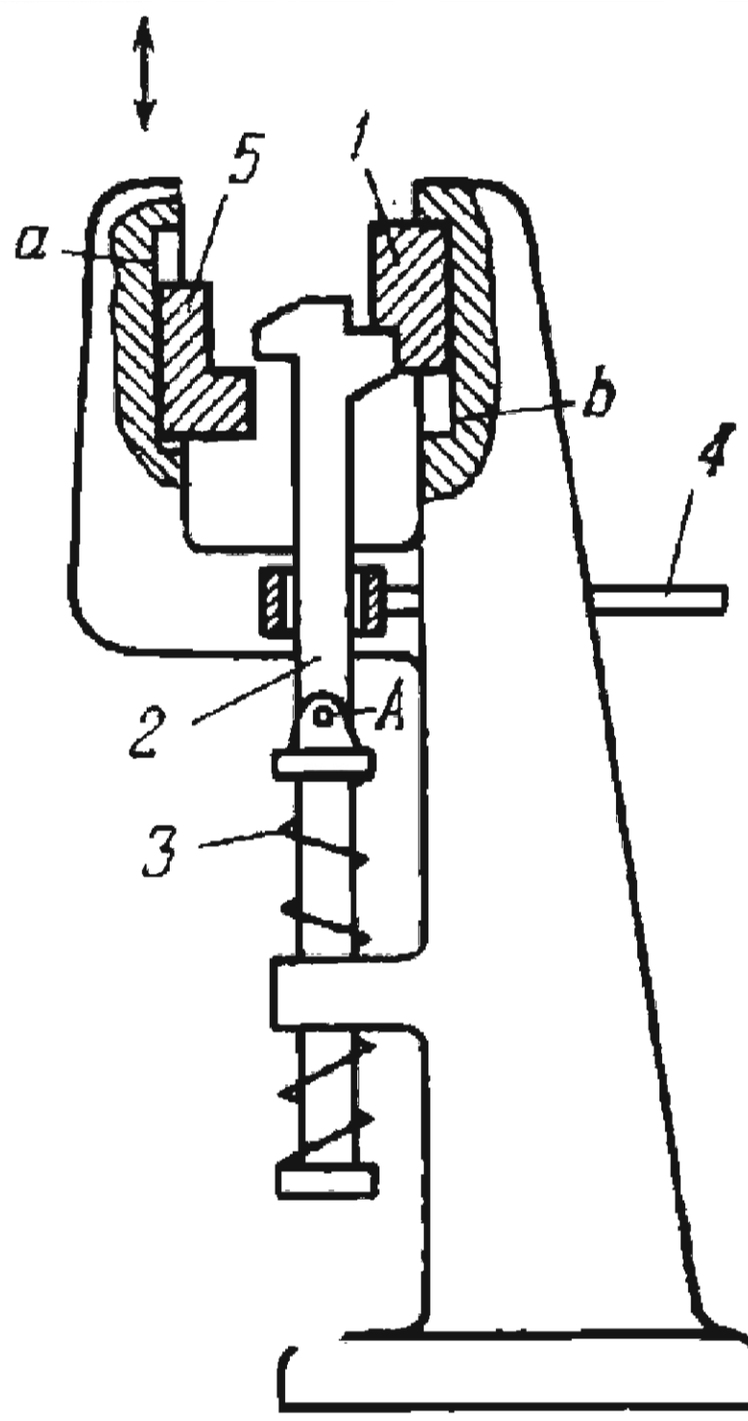

Link *1* is held in the position shown by latch *2* and spring *3* while link *5* reciprocates along fixed guide *a*. When latch *2* is turned about axis *A* by lever *4*, link *5* is stopped and link *1* begins to reciprocate along fixed guide *b*.

2758	DOUBLE-DETENT RATCHET MECHANISM	RG SD

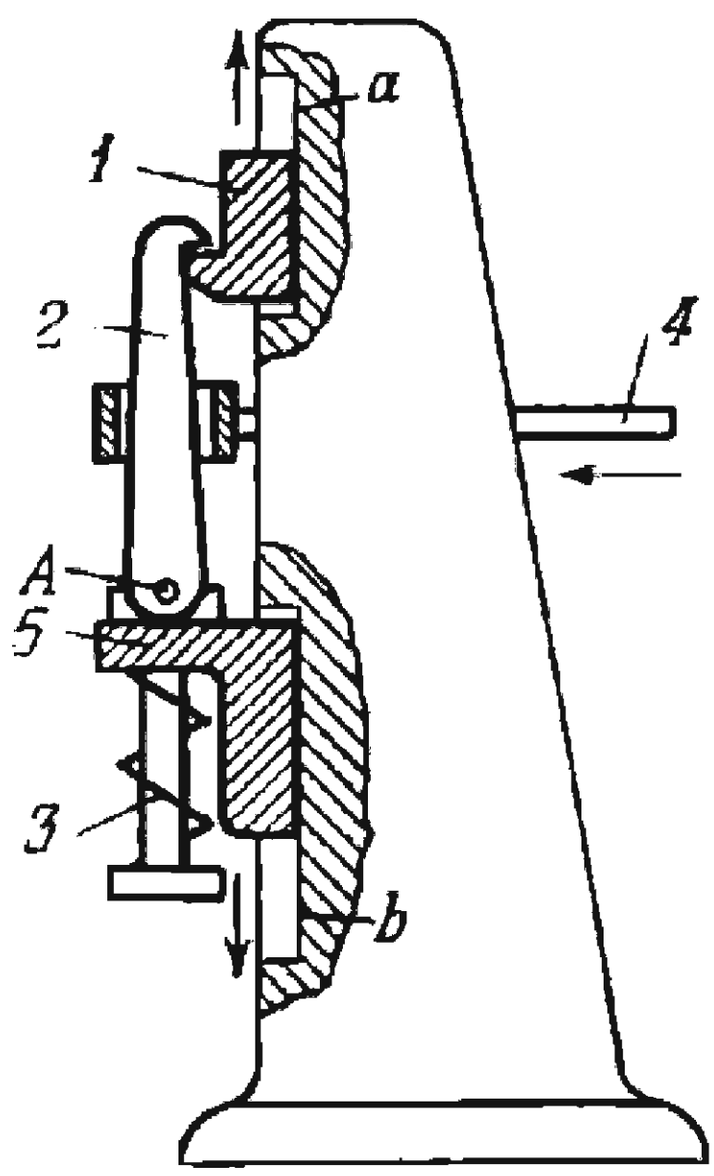

Links *1* and *5* are held in the position shown by latch *2* and spring *3*. When latch *2* is turned about axis *A* by lever *4*, links *1* and *5* are released and they begin to slide, the first up and the second down, along fixed guides *a* and *b*.

2759	RATCHET-TYPE DETENT MECHANISM	RG SD

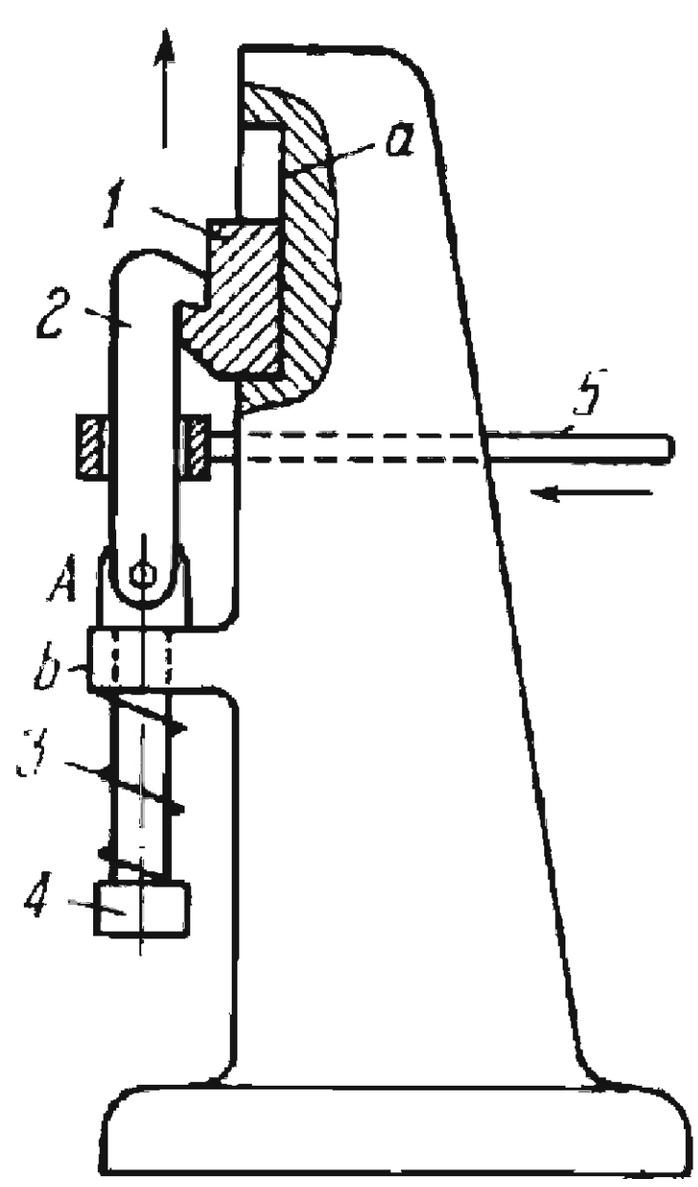

Link *1* slides upward along fixed guide *a*, compressing spring *3*. When latch *2* is turned by link *5* about axis *A*, the latch is released and spring *3* returns link *4* in fixed guide *b* to its initial position.

2760	RATCHET-TYPE DETENT MECHANISM	RG SD

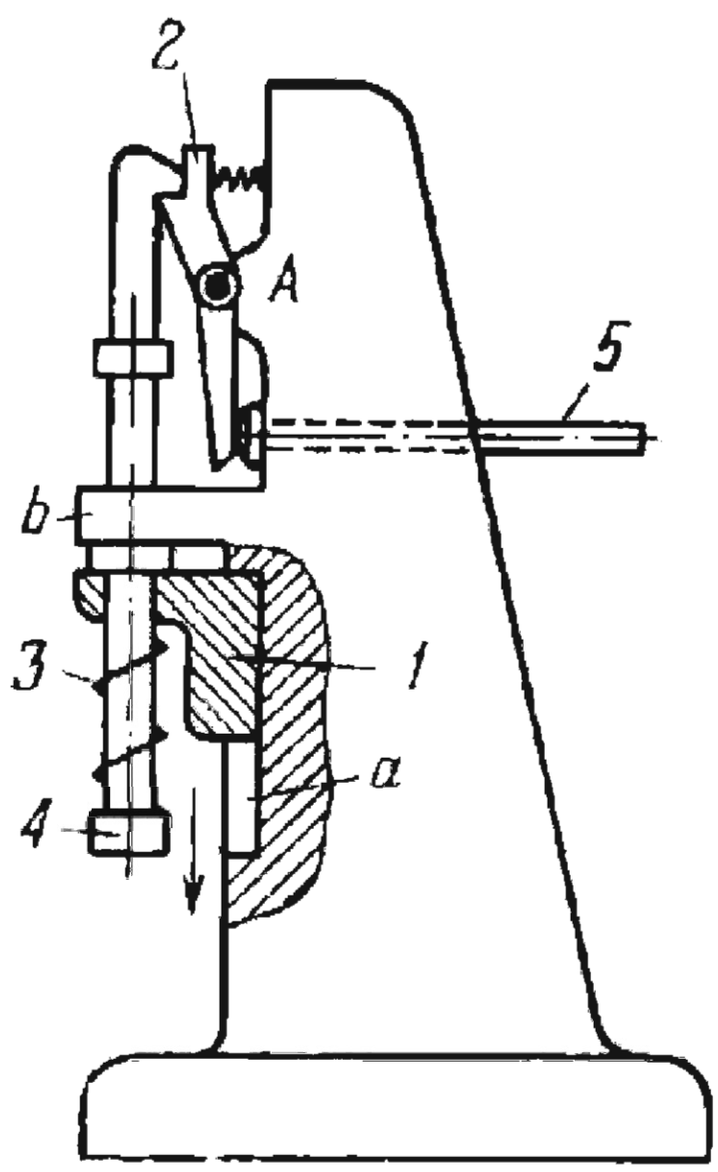

Link *1* slides downward along fixed guide *a*, compressing spring *3*. When catch *2* is turned by plunger *5* about fixed axis *A*, link *4* is released and spring *3* shifts link *4* downward in fixed guide *b*.

2761	RATCHET-TYPE DETENT MECHANISM	RG SD

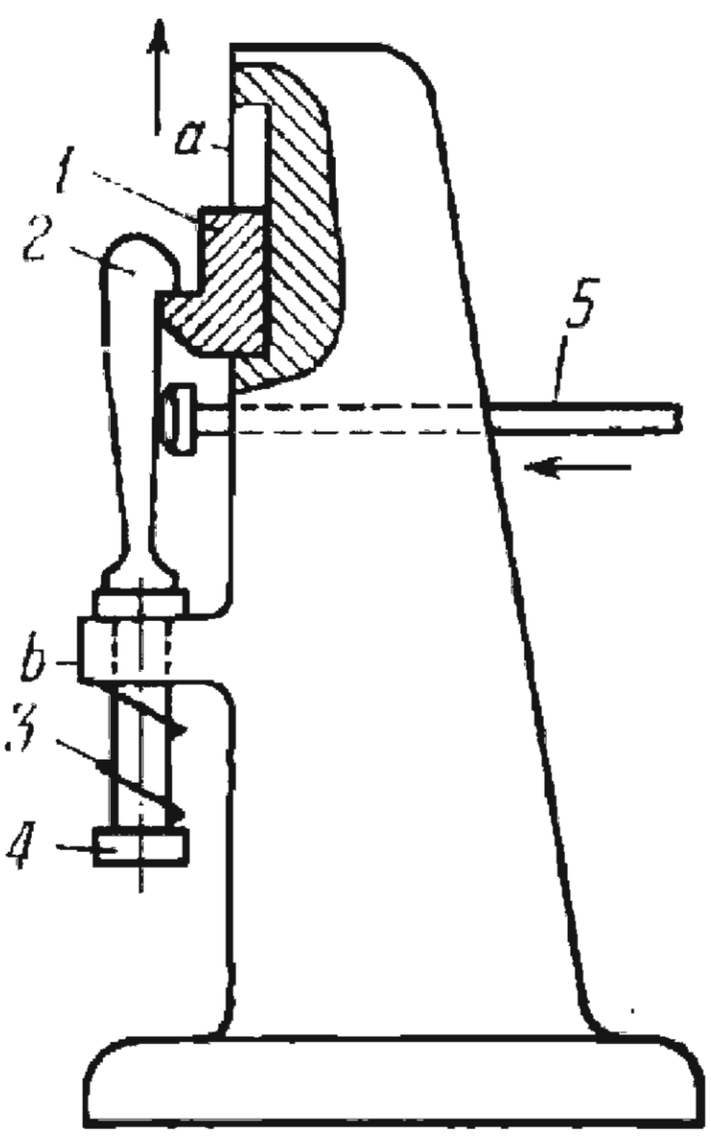

Link *1* slides upward along fixed guide *a*, compressing spring *3*. When catch *2*, designed as a flat spring, is deflected to the left by plunger 5, spring *3* returns link *4* in fixed guide *b* to its initial position.

2762	RATCHET-TOOTH RACK MECHANISM WITH A CYLINDRICAL LOCKING ELEMENT	RG SD

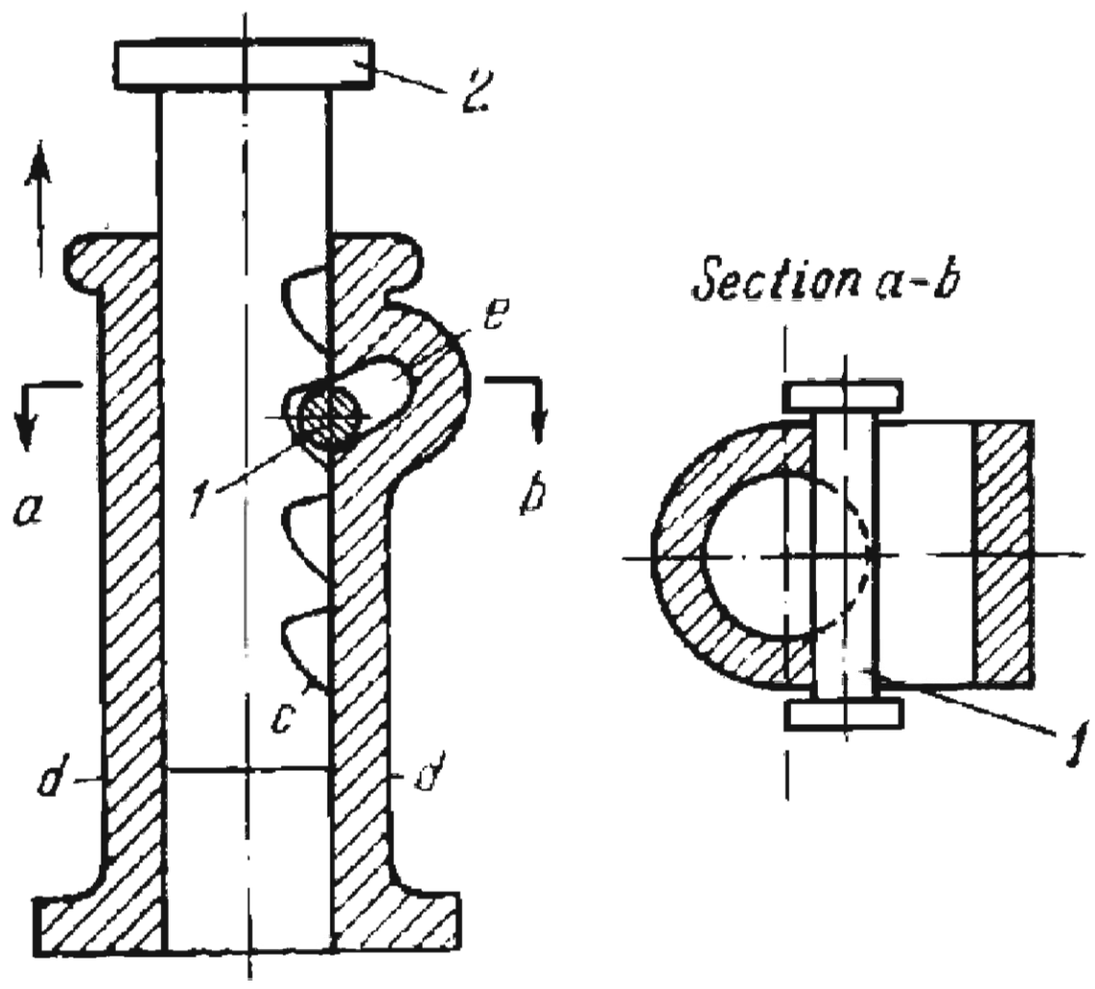

Round rack 2 slides in fixed guides *d-d* and has specially shaped recesses *c* into which cylindrical locking element *1* fits. Recess *e* is provided in the body of the device. The rack can slide only upward. Downward motion is prevented by locking element *1* which jams rack *2*.

2763	RATCHET-TOOTH RACK MECHANISM WITH A SLIDING LOCKING ELEMENT	RG SD

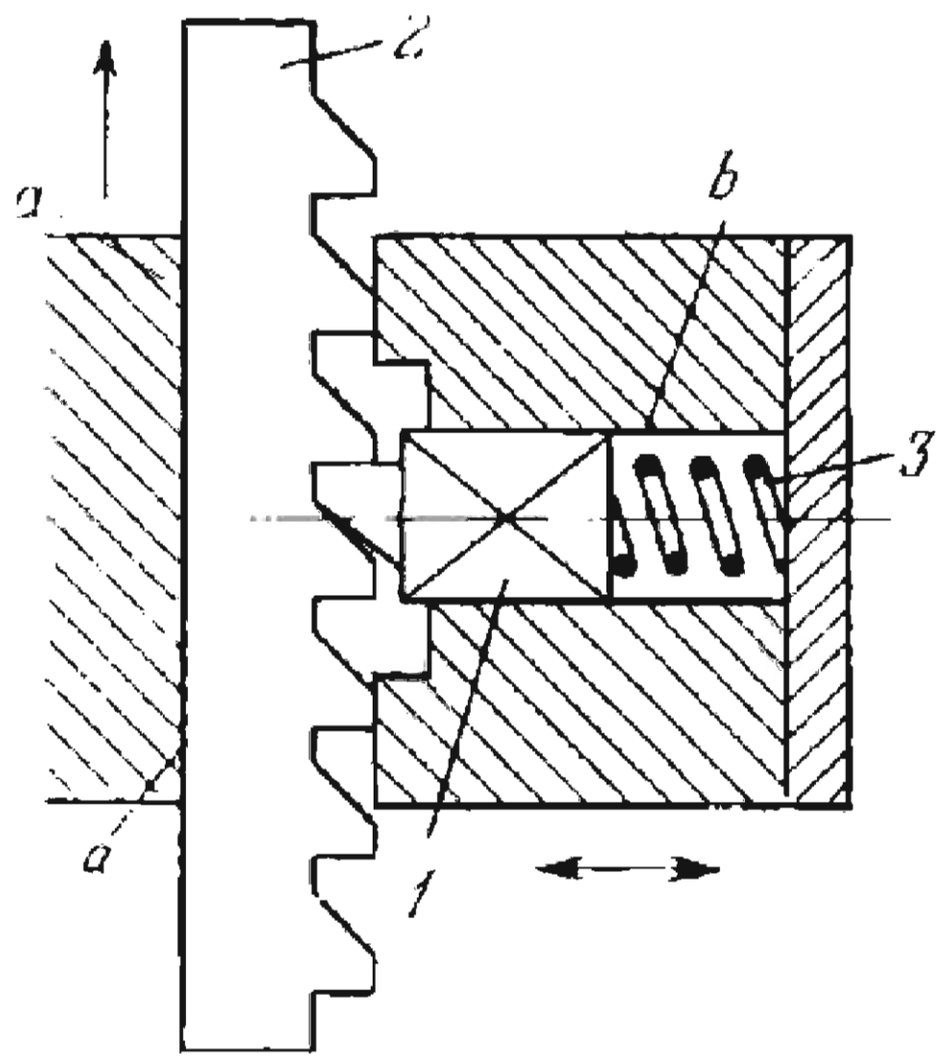

Ratchet-tooth rack *2* slides in fixed guides *a-a*. Prismatic locking element *1* slides in fixed guide *b*. Spring *3* holds locking element *1* against the teeth of rack *2* which can slide only upward. Downward motion is prevented by locking element *1* which engages a tooth of the rack.

2764	RATCHET-TYPE BAND-BRAKE MECHANISM FOR HOISTING	RG Br

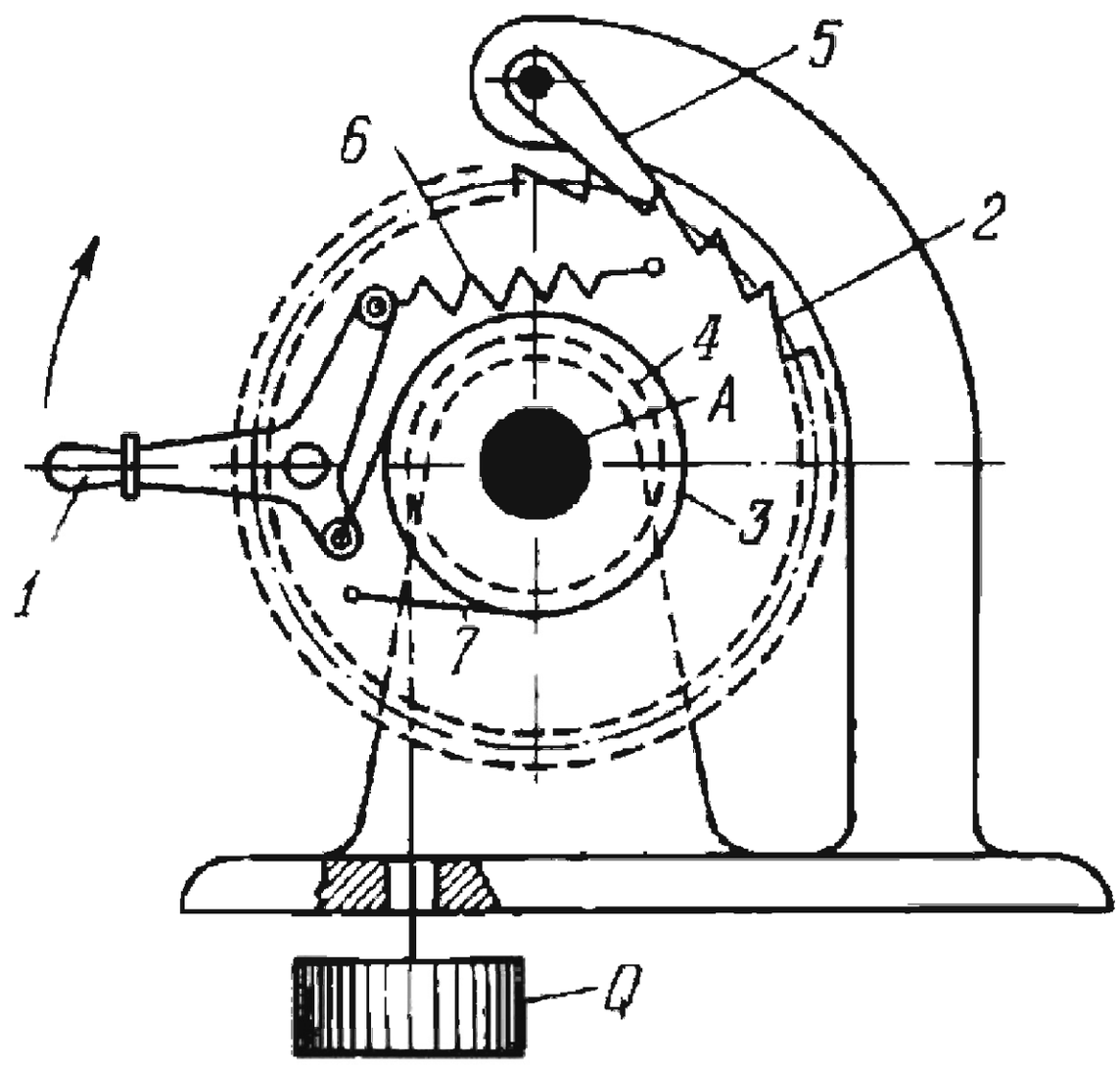

When handle *1* is turned clockwise, brake band *7* is tightened and ratchet wheel *2*, brake drum *3* and hoisting drum *4* rotate as a single unit about axis *A*, lifting load *Q*. Pawl *5* slides over the teeth of wheel *2*, allowing it to rotate clockwise. Spring *6* provides for the initial tension of the brake band. When handle *1* is released, the brake is applied by the load and pawl *5* prevents the load from dropping.

2765	RATCHET-TYPE BAND-BRAKE MECHANISM	RG Br

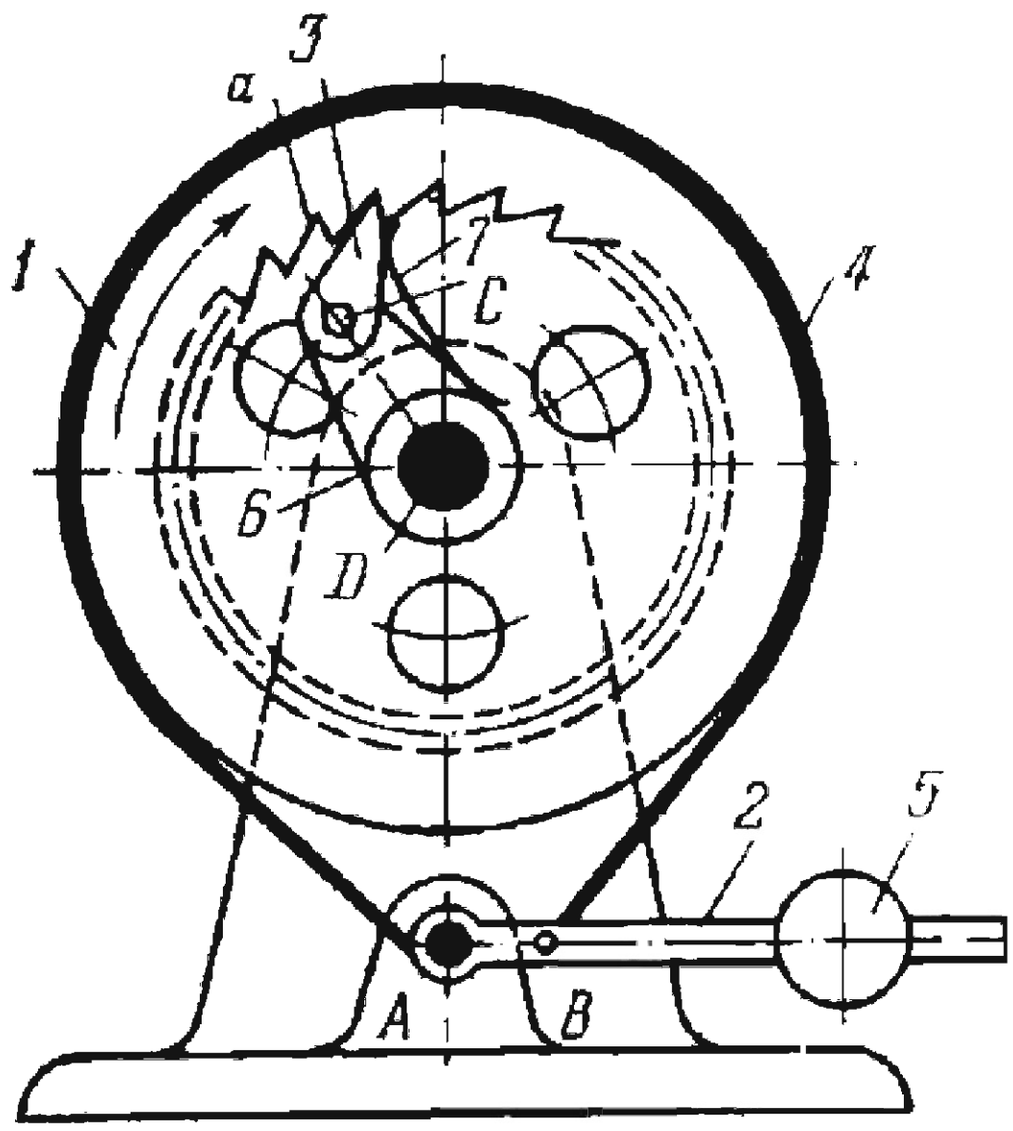

Drum *1* turns about fixed axis *D*, has internal ratchet teeth *a* and is encircled by brake band *4* whose ends *A* and *B* are attached to the base and to lever *2*. Lever *2* turns about fixed axis *A*. Pawl *3* rotates about axis *C* of crank *6* which rotates counterclockwise about axis *D*. Pawl *3* is held against teeth *a* by flat spring *7*. Rotation of crank *6* in the opposite direction is prevented by brake band *4* which is tightened by weighted lever *2*. The braking force is regulated by adjusting weight *5* along lever *2*.

2766	RATCHET-TYPE MECHANISM OF A HOIST	RG MH

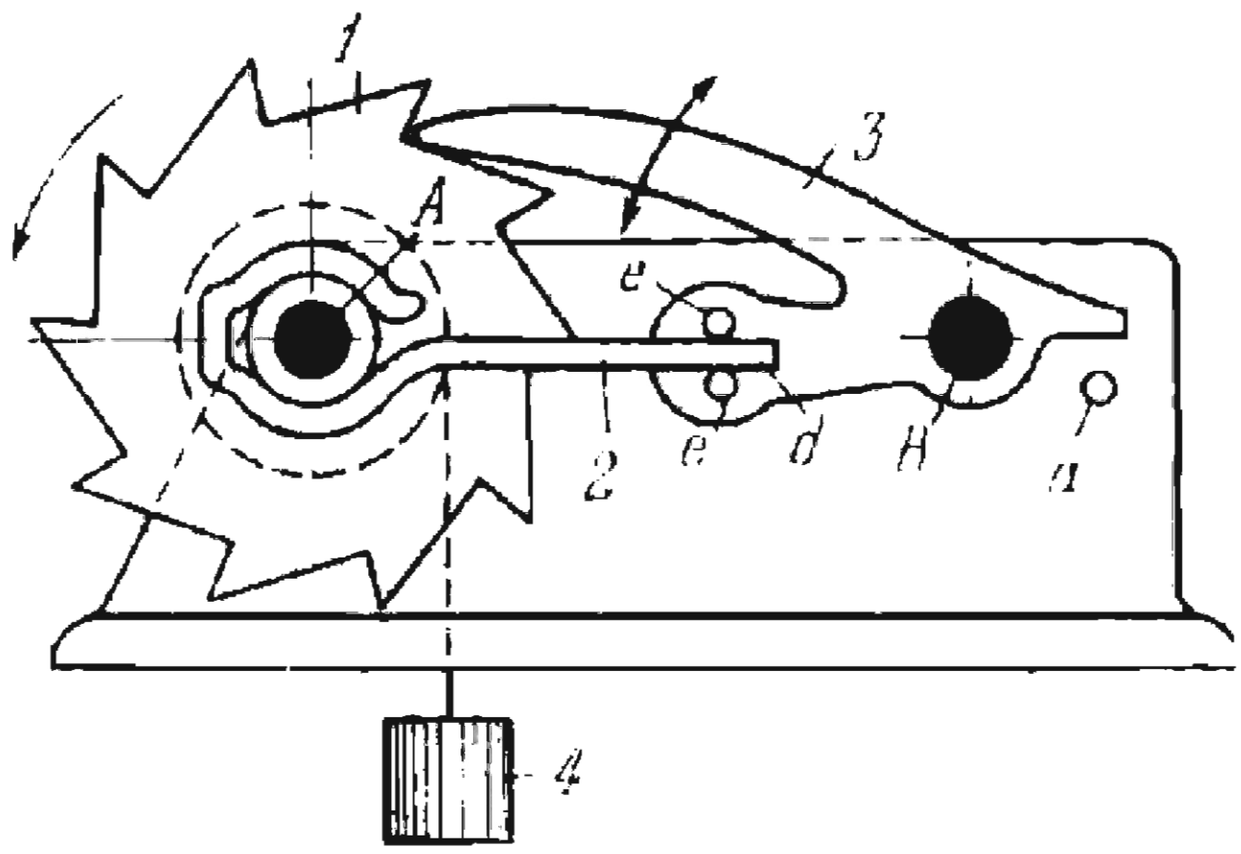

A clockwise torque is applied about fixed axis *A* to ratchet wheel *1* by weight *4*. Pawl *3* turns about fixed axis *B* and engages the teeth of wheel *1*. Flat spring *2* encircles the hub of wheel *1* with a friction bearing and its end *d* passes between pins *e* of pawl *3*. When ratchet wheel *1* is rotated counterclockwise to hoist the load, spring *2* has a tendency to turn with the wheel, and it turns pawl *3* clockwise until its lug reaches pin *a*, thereby lifting pawl *3* out of contact with wheel *1* and preventing the clicking noise as it slides over the teeth.

2767	SPATIAL RATCHET-TYPE MECHANISM OF A HOIST	RG MH

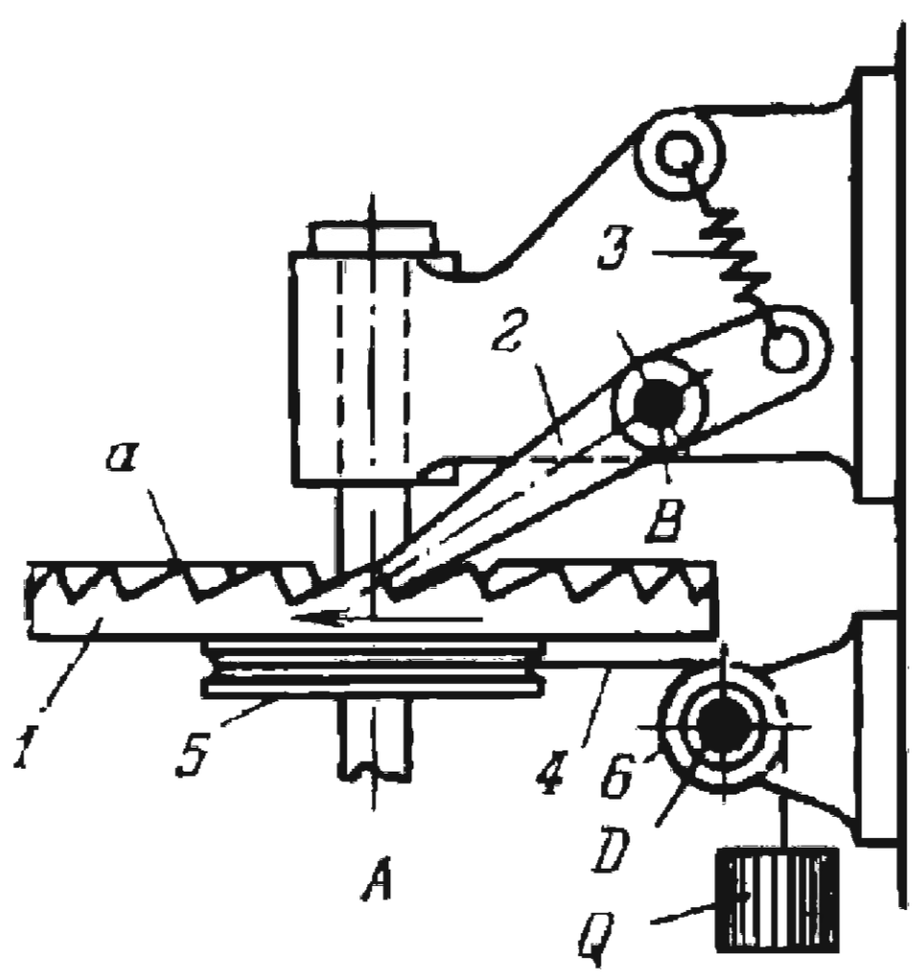

A torque is applied in the clockwise direction (when looking downward) about fixed axis *A* to ratchet wheel *1* to hoist load *Q*. Load *Q* is suspended from flexible link *4* which is wound around pulley *5* and runs over pulley *6*. Pulley *5* is rigidly attached to (or integral with) wheel *1*, and pulley *6* rotates about fixed axis *D*. Teeth *a* are on the top end face of wheel *1* and are engaged by pawl *2* which turns about fixed axis *B* and is held against wheel *1* by spring *3*. Reverse rotation of ratchet wheel *1* (and dropping of load *Q*) is prevented by pawl *2*.

2768 RATCHET-TYPE RACK MECHANISM OF A HOIST

RG MH

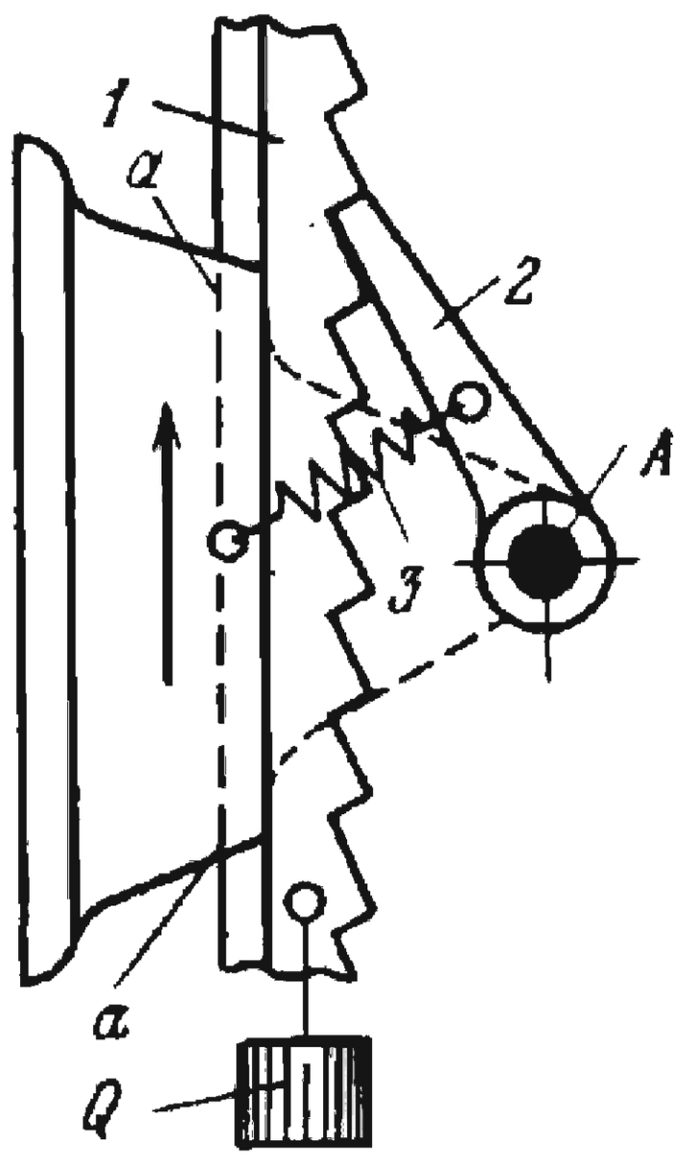

An upward force is applied to ratchet-tooth rack *1*, sliding along fixed guides *a-a*, to hoist load *Q*. Pawl *2* turns about fixed axis *A* and is held in engagement with the teeth of rack *1* by spring *3*. Downward motion of rack *1* (and dropping of load *Q*) is prevented by pawl *2*.

2769 RATCHET-TYPE RACK MECHANISM OF A JACK

RG MH

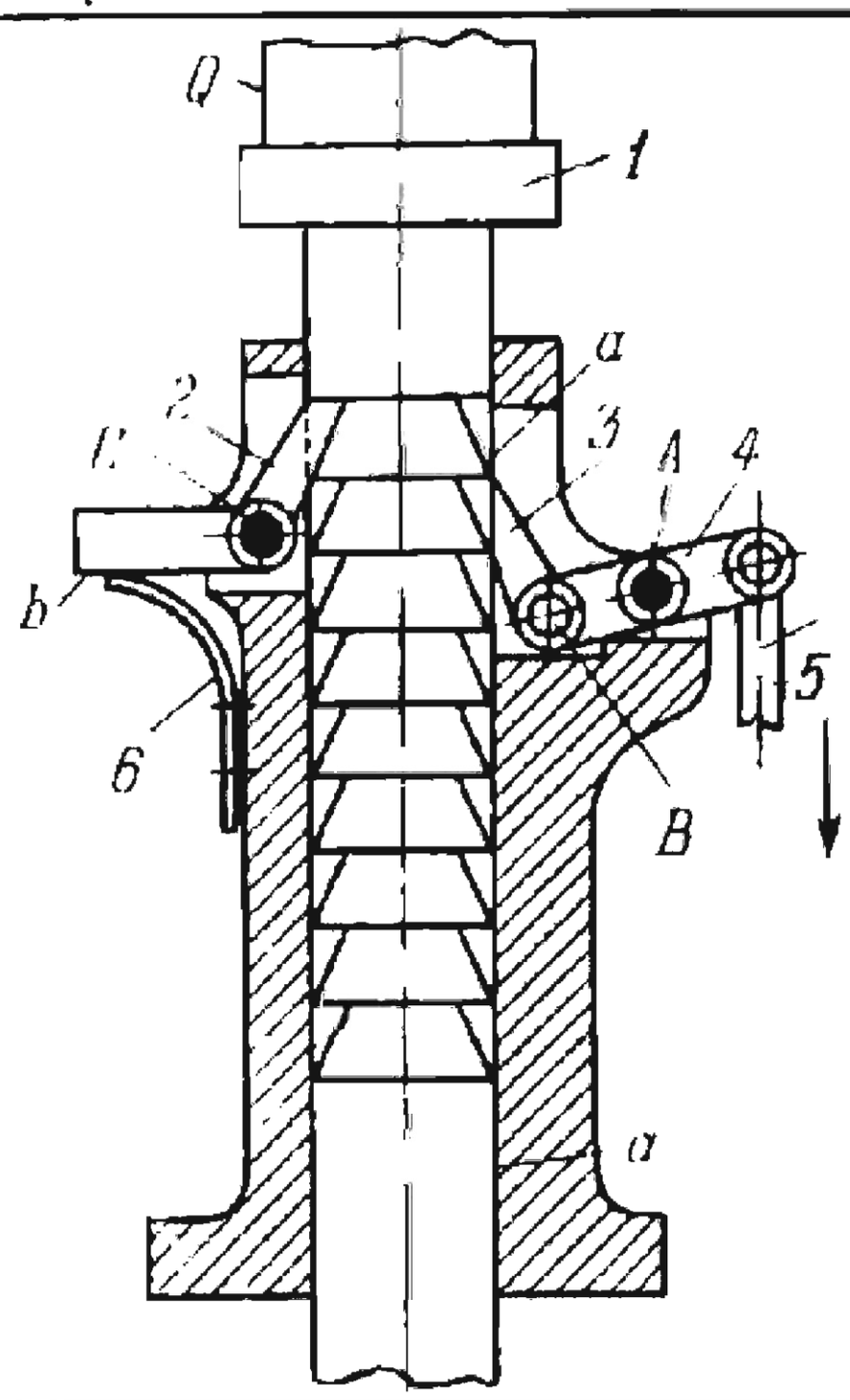

Round ratchet-tooth rack *1* slides in vertical fixed guides *a-a*. Load *Q* is lifted by tie-rod *5* which oscillates lever *4* about fixed axis *A*. Pawl *3* is connected by turning pair *B* to lever *4* and engages the annular teeth of rack *1* to lift the rack intermittently. Downward motion of the rack (and dropping of load *Q*) is prevented by pawl *2* which turns about fixed axis *C* and is held in engagement with the teeth of rack *1* by spring *6*.

2770	RATCHET-TYPE MECHANISM OF A HOIST	RG MH

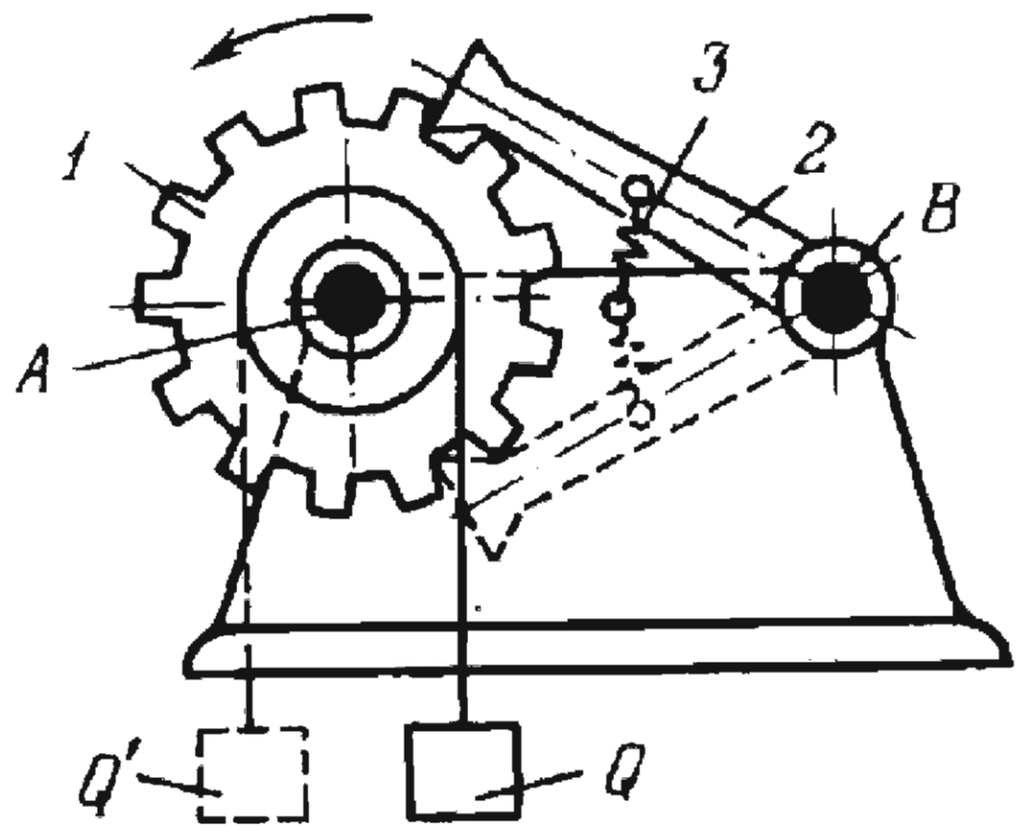

A counterclockwise torque is applied about fixed axis *A* to ratchet wheel *1* to hoist load *Q*. Reversible pawl *2* turns about fixed axis *B* and engages the teeth of wheel *1*, preventing its rotation in the reverse direction and dropping of load *Q*. Pawl *2* is held in engagement with wheel *1* by spring *3*. If the position of load *Q* is changed to *Q'*, a clockwise torque is required to hoist it and pawl *2* is reversed to the position shown by dash lines.

2771	RATCHET-TYPE MECHANISM OF A HOIST	RG MH

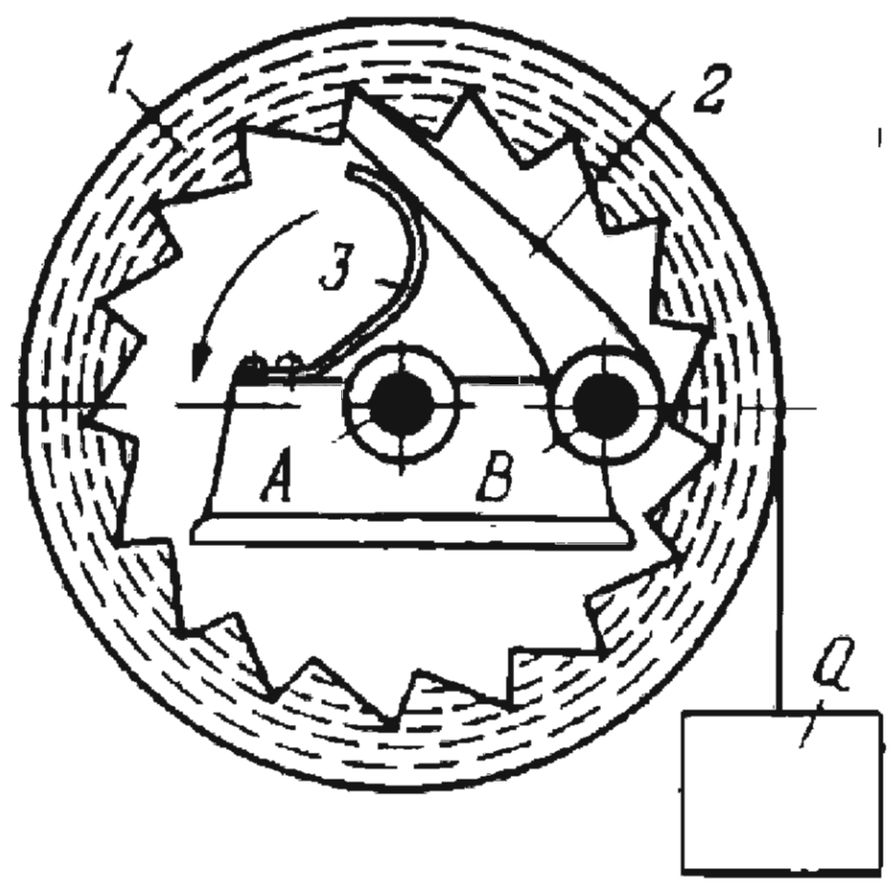

A counterclockwise torque is applied about fixed axis *A* to internal-tooth ratchet wheel *1* to hoist load *Q*. Pawl *2* turns about fixed axis *B* and engages the teeth of wheel *1*, preventing its rotation in the reverse direction and dropping of load *Q*.

Pawl *2* is held in engagement with wheel *1* by spring *3*.

2772	RATCHET-TYPE MECHANISM OF A HOIST	RG MH

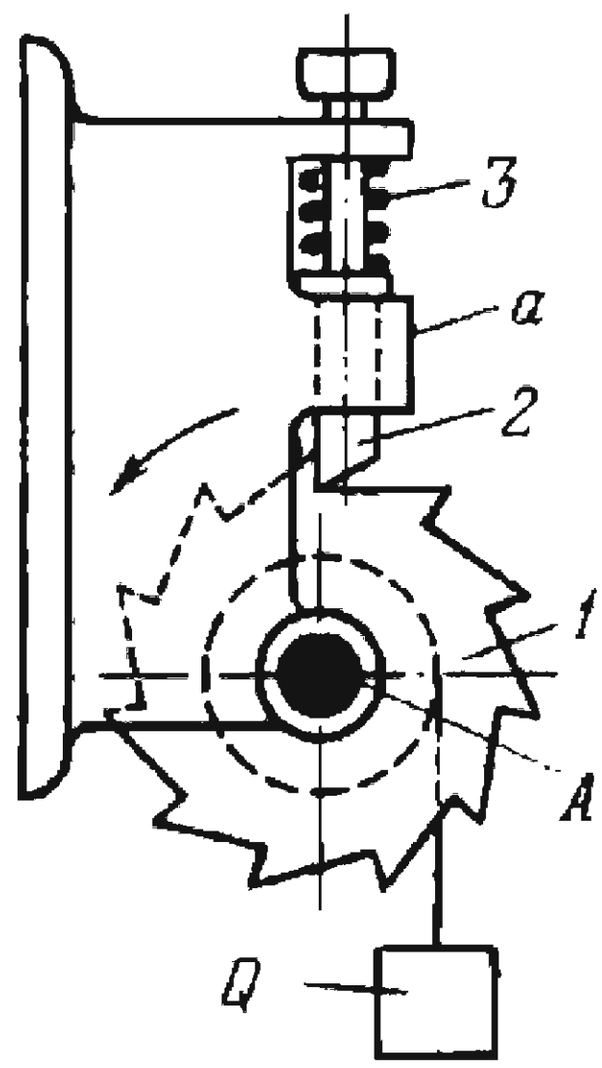

A counterclockwise torque is applied about fixed axis *A* to ratchet wheel *1* to hoist load *Q*. Pawl *2* slides in fixed guide *a* and engages the teeth of wheel *1*, preventing its rotation in the reverse direction and dropping of load *Q*. Pawl *2* is held in engagement with wheel *1* by spring *3*.

2773	RATCHET-TYPE MECHANISM OF A HOIST	RG MH

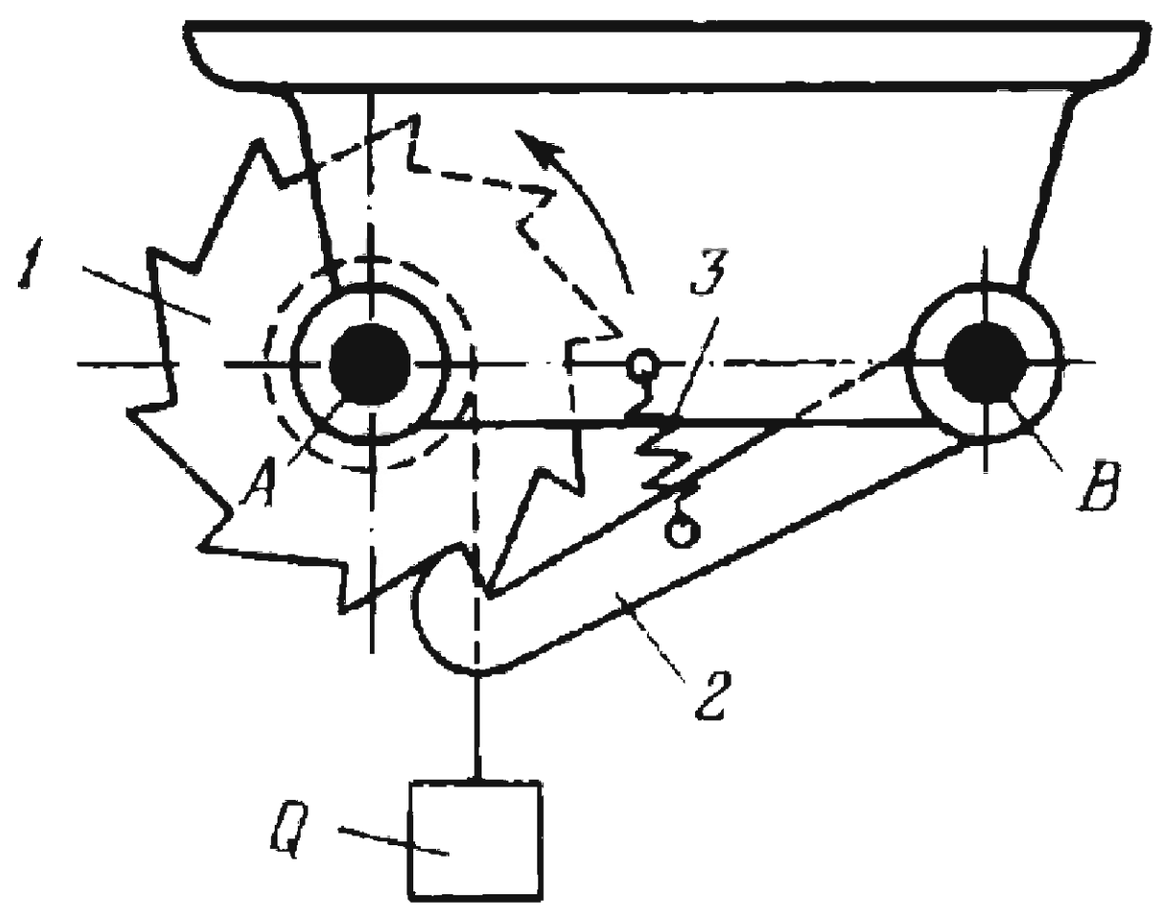

A counterclockwise torque is applied about fixed axis *A* to ratchet wheel *1* to hoist load *Q*. Pawl *2* turns about fixed axis *B* and engages the teeth of wheel *1*, preventing its rotation in the reverse direction and dropping of load *Q*. Pawl *2* is held in engagement with wheel *1* by spring *3*.

2774	TRIPLE-PAWL RATCHET-TYPE MECHANISM OF A HOIST	RG MH

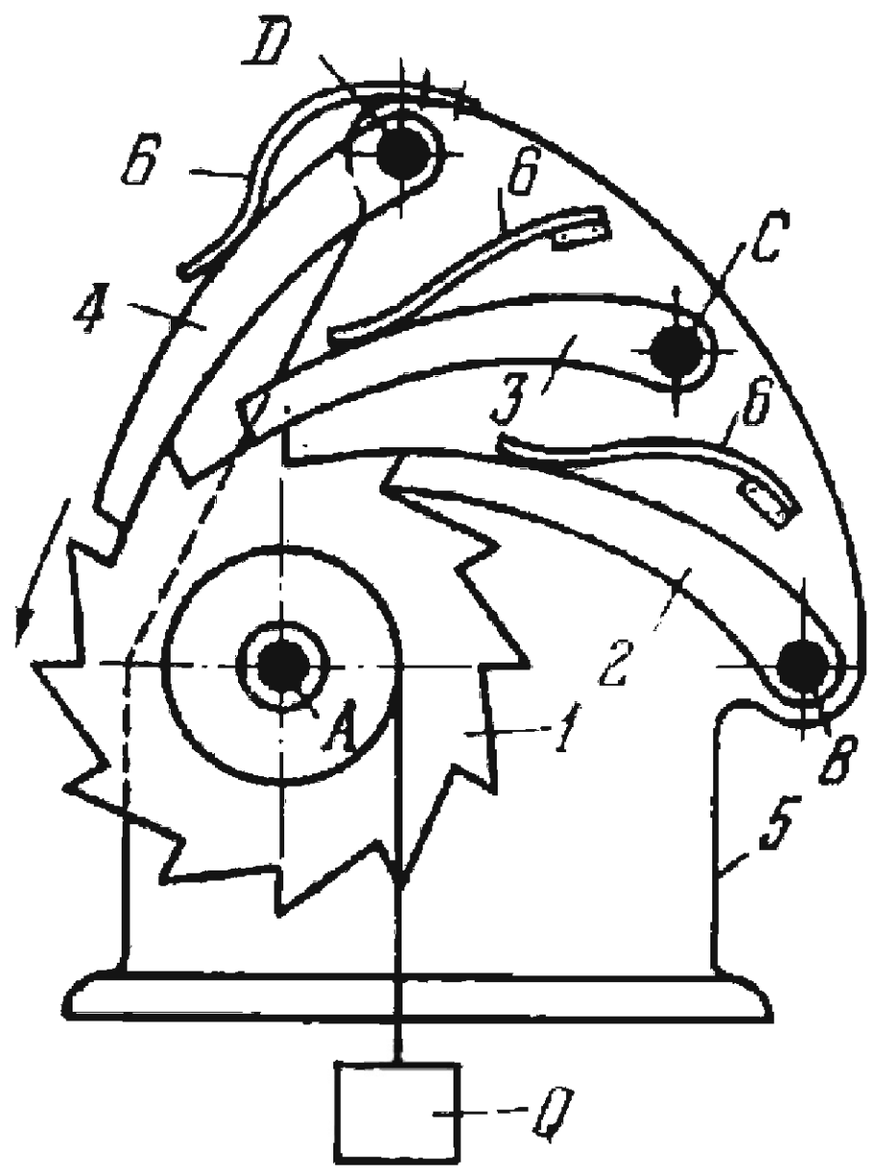

A counterclockwise torque is applied about fixed axis *A* to ratchet wheel *1* to hoist load *Q*. Pawls *2*, *3* and *4* turn about axes *B*, *C* and *D* and separately engage the teeth of wheel *1*, preventing rotation in the reverse direction and dropping of load *Q*. The pawls are of different length or their axes of rotation are so located that if pawl *2* engages the face of a tooth, pawl *3* is one-third pitch beyond the face of the next tooth and pawl *4* is two-thirds pitch beyond the face of the following tooth. The provision of three such pawls is equivalent to having a ratchet wheel with three times as many (but consequently weaker) teeth. The pawls are held in engagement with wheel *1* by flat springs *6*.

2775	TRIPLE-PAWL RATCHET-TYPE MECHANISM OF A HOIST	RG MH

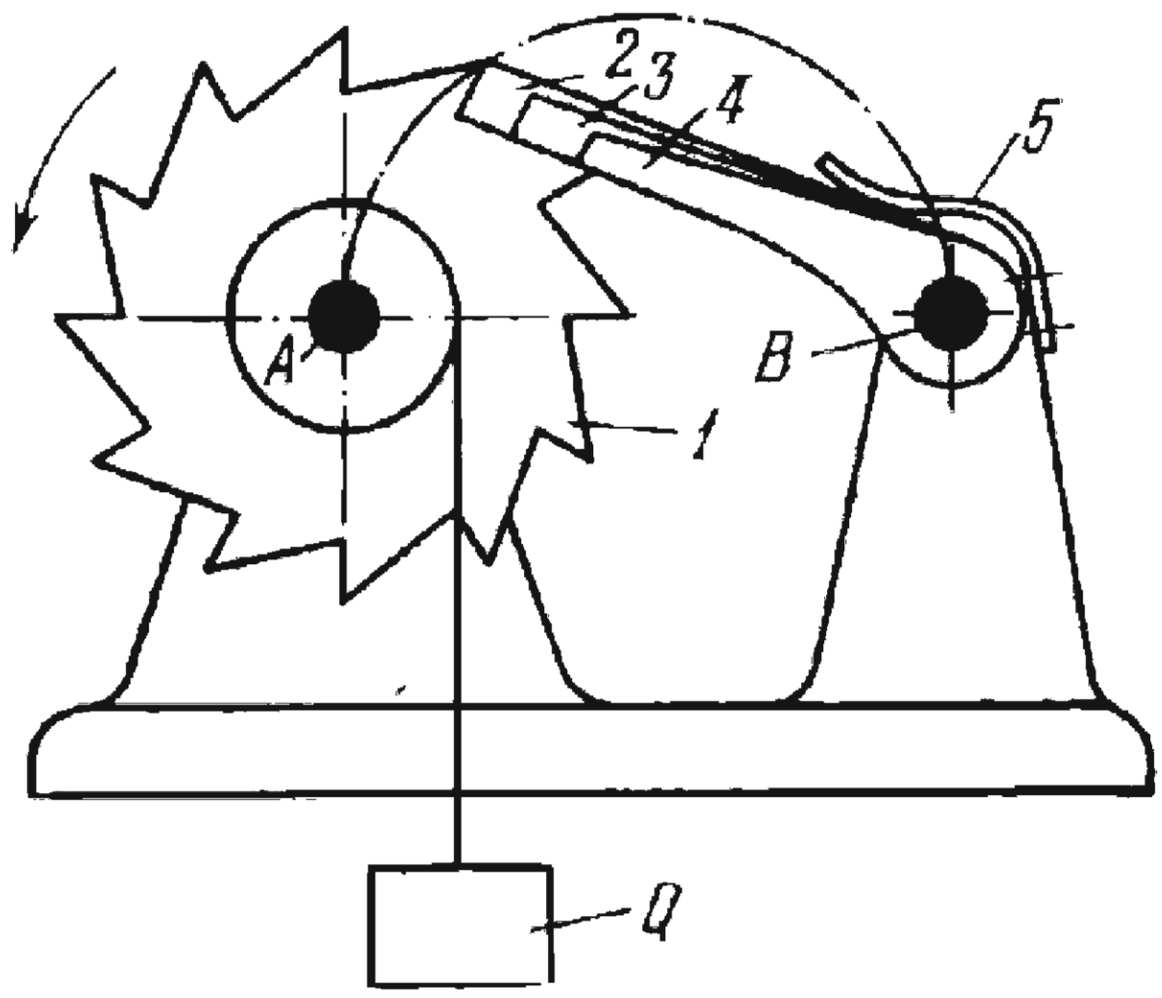

A counterclockwise torque is applied about fixed axis *A* to ratchet wheel *1* to hoist load *Q*. Pawls *2*, *3* and *4* turn about fixed axis *B* and separately engage the teeth of wheel *1*, preventing its rotation in the reverse direction and dropping of load *Q*. The pawls are of different length, pawl *3* being longer than pawl *4* and pawl *2* than pawl *3* by an amount equal to one-third the pitch of the ratchet wheel teeth. The provision of three such pawls is equivalent to having a ratchet wheel with three times as many (but consequently weaker) teeth. The pawls are held in engagement with wheel *1* by flat spring *5*.

2776	RATCHET-TYPE WIRE FEEDING MECHANISM	RG SF

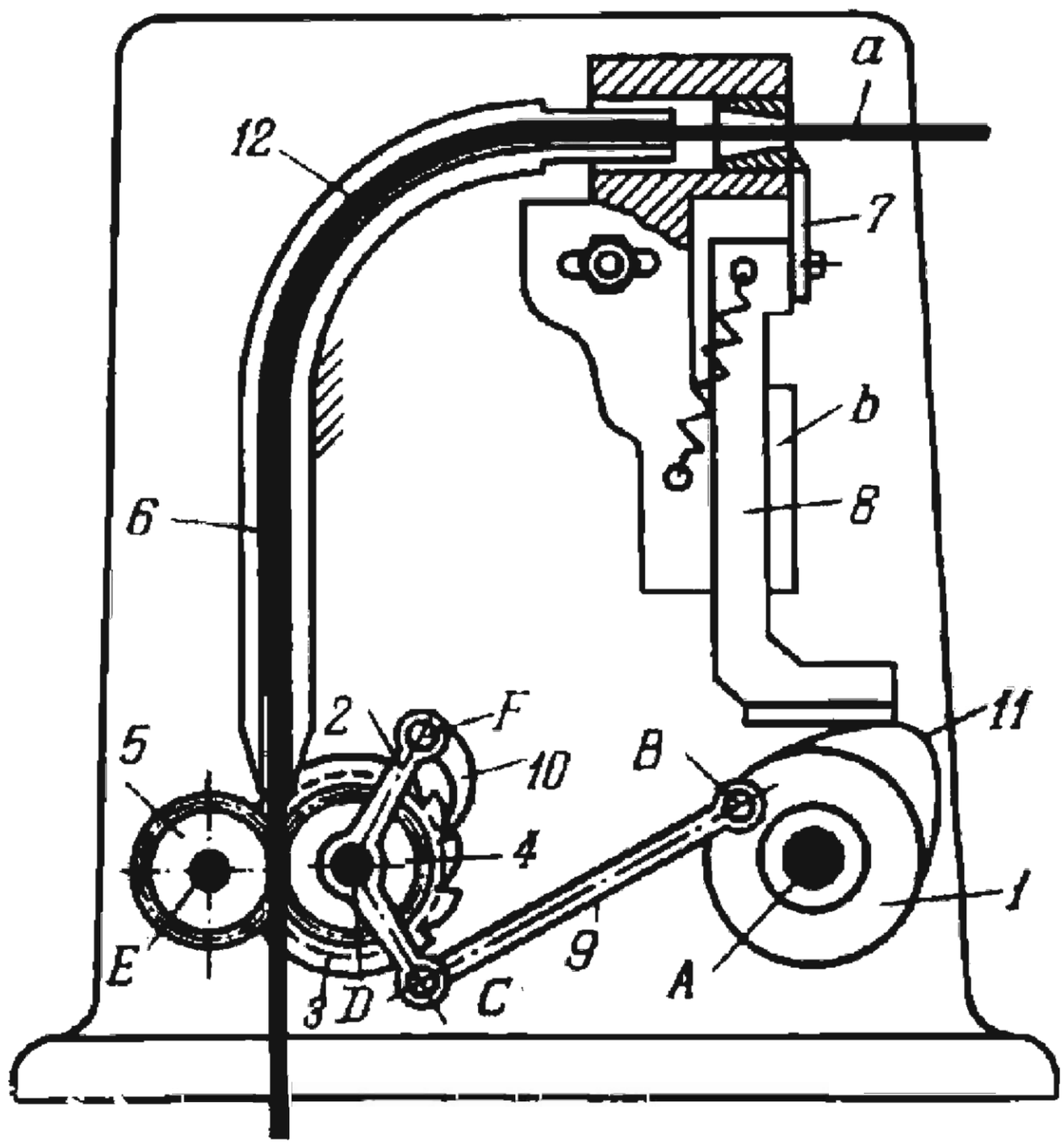

Link *1* rotates about fixed axis *A* and is connected by turning pair *B* to link *9* which, in turn, is connected by turning pair *C* to bell crank *2*. Bell crank *2* turns about fixed axis *D* and is connected by turning pair *F* to pawl *10* which engages and rotates ratchet wheel *3* intermittently about axis *D*. Rotating together with wheel *3* is roll *4*. Rolls *4* and *5* are engaged through meshing gears, rigidly attached to the rolls and rotating about fixed axes *D* and *E*. As the rolls rotate, wire *12*, clamped between them, is fed upward through channel *6*. Slide *8* is reciprocated in fixed guide *b* by cam *11* which is rigidly attached to link *1*. In the upstroke of slide *8*, knife *7* cuts off piece *a* of the wire. The length cut off depends on the angle of rotation of ratchet wheel *3* to each stroke of pawl *10*.

2777	RATCHET-TYPE ADJUSTABLE FEED MECHANISM	RG SF

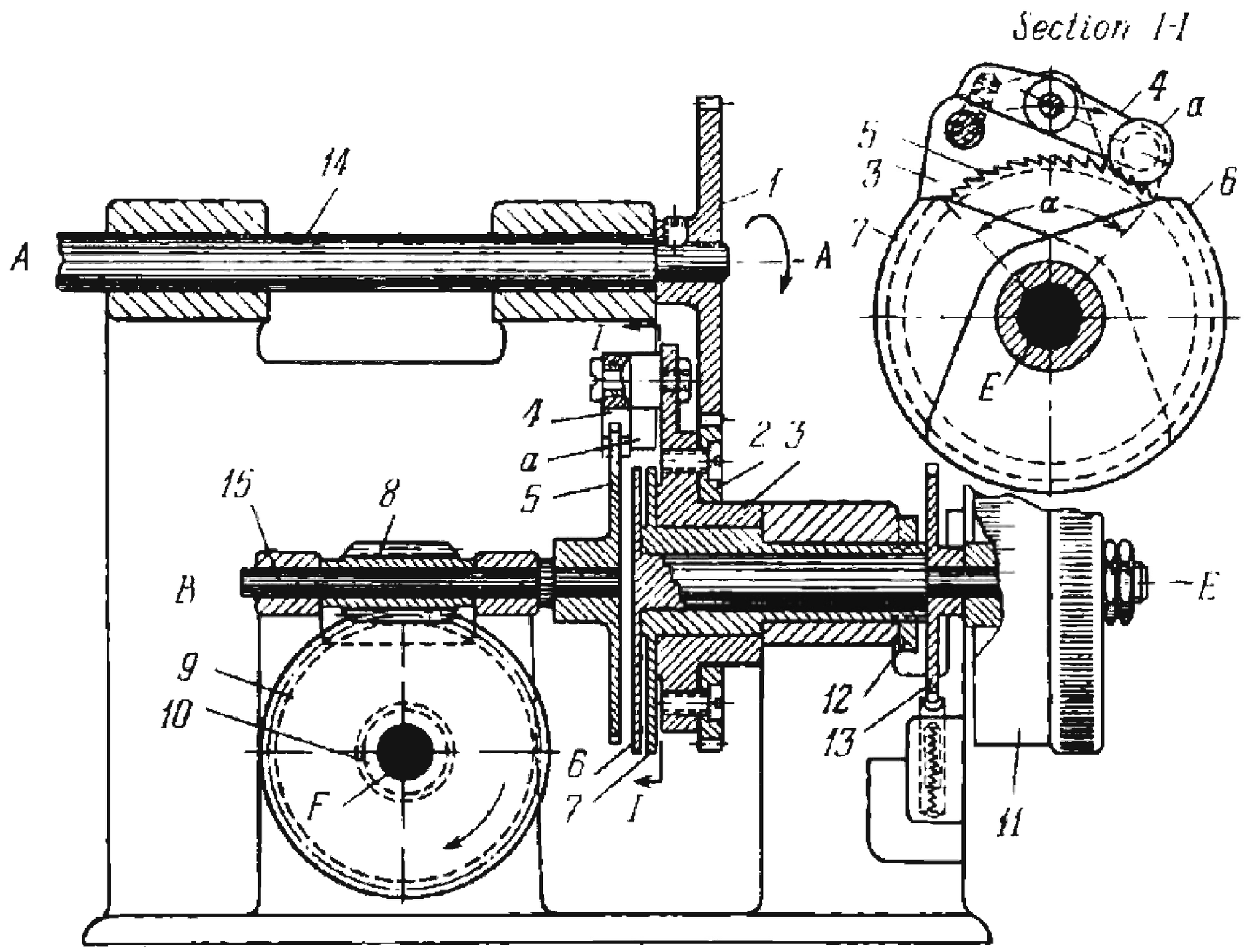

Rotation of shaft *14* about fixed axis *A* is transmitted through meshing gears *1* and *2*, and disk *3* to pawl *4* which carries a pin with roller *a*. Pawl *4* engages the teeth of ratchet wheel *5*, and rotates it with shaft *15* about fixed axis *B* until roller *a* begins to ride the lobes of cams *6* and *7* which can be turned about fixed axis *E*. The feeding motion is transmitted from shaft *15* through worm *8* and worm wheel *9* to feed screw *10* which rotates about fixed axis *F*. The rate of feed depends upon the setting of cams *6* and *7*. When angle α of pawl engagement with wheel *5* is increased, the rate of feed per revolution of disk *3* is correspondingly increased and vice versa. The feed is varied by means of dial *11* which turns cam *6* with respect to cam *7*. Keyed to the shaft of dial *11* is gear *13* which is locked in the required position by a spring-loaded plunger. The number of divisions on dial *11* corresponds to the number of teeth on gear *13* and on ratchet wheel *5*. The instant that the feed motion begins can be varied by turning cam *7* which is then locked in the required position by ring nut *12*.

2778	RATCHET-TYPE DIFFERENTIAL INTERMITTENT FEED MECHANISM	RG SF

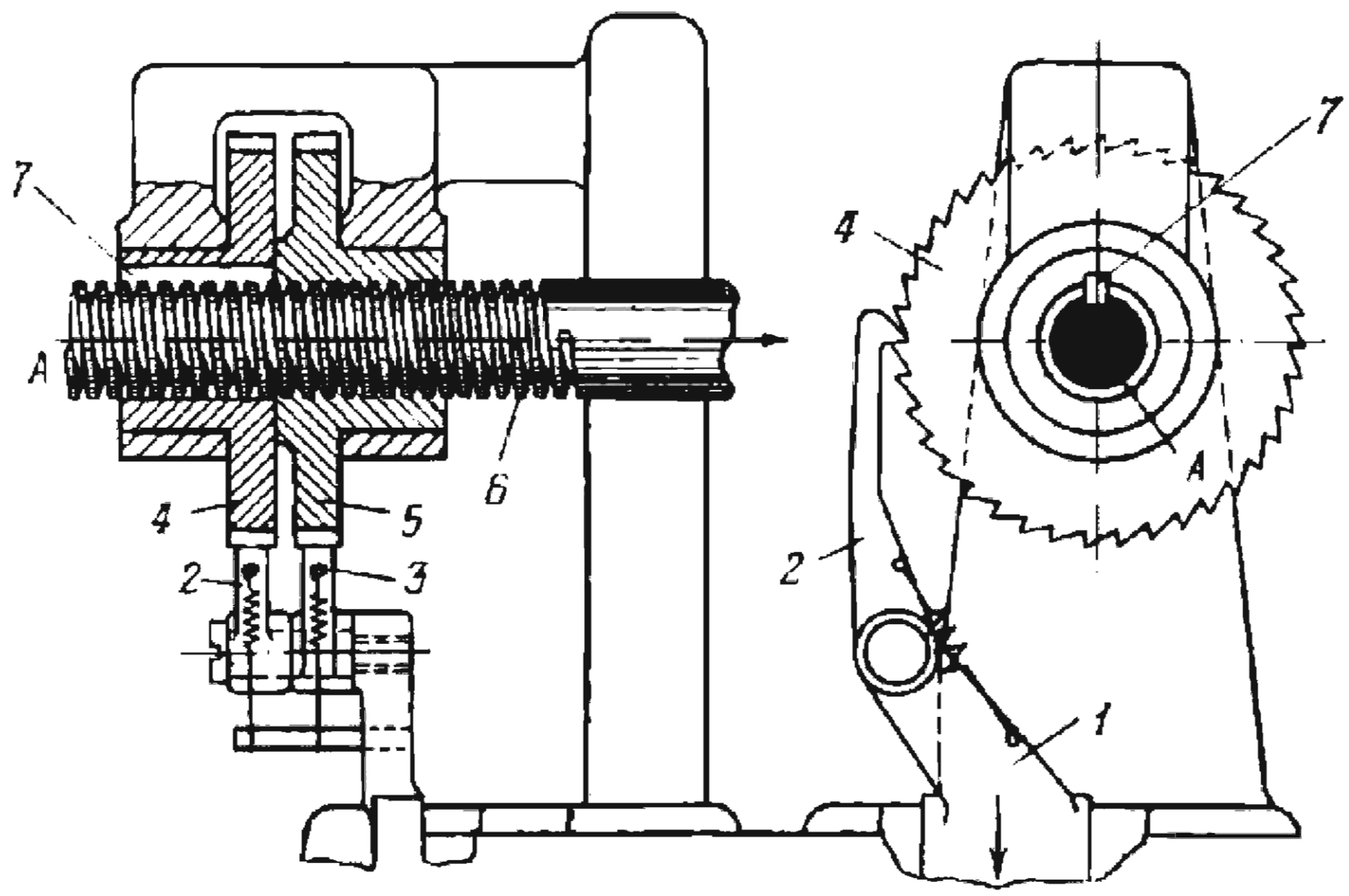

In the downstroke of reciprocating slide *1*, pawls *2* and *3* engage the teeth of ratchet wheels *4* and *5*, turning them through an angle corresponding to one tooth, but this angle differs for the two wheels because ratchet wheel *4* has one tooth less than wheel *5*. Ratchet wheel *4* has feather key *7* which engages a keyway in feed screw *6*, while the bore in ratchet wheel *5* is threaded to engage screw *6*. If pawl *3* is turned out of engagement with wheel *5*, the axial motion of screw *6* equals zero. If pawl *2* is turned out of engagement with wheel *4*, the axial motion of screw *6* per stroke of slide *1* is proportional to the angle of rotation of wheel *5*. When both pawls are in engagement, the axial feed of screw *6* is proportional to the difference in the angles of rotation of wheels *4* and *5* per slide stroke.

2779	RATCHET-TYPE AUTOMATIC FEED MECHANISM	RG SF

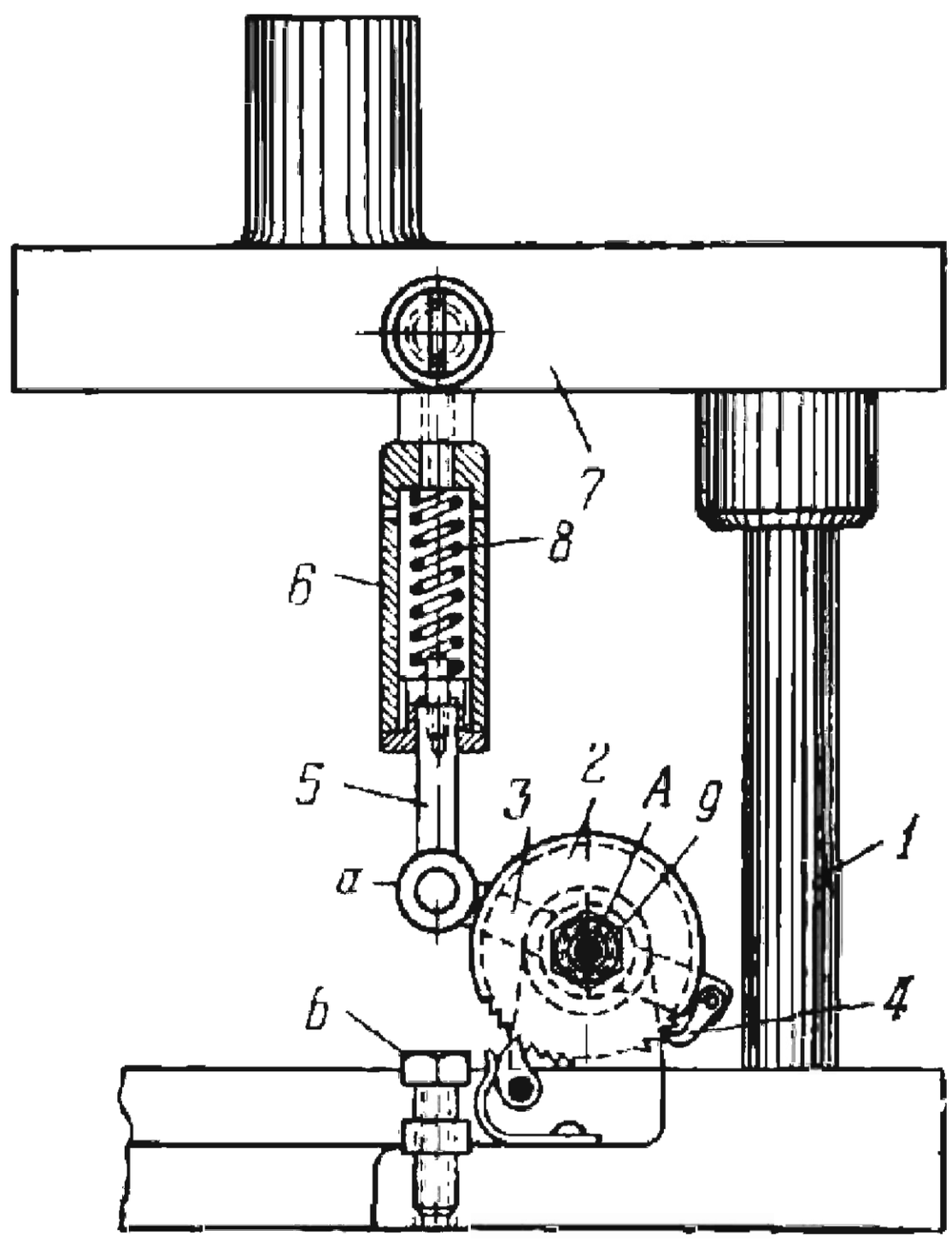

When crosspiece *7* travels downward, pawl *4*, actuated by levers *3* and *5*, slides over the teeth of ratchet wheel *2* which rotates about fixed axis *A*. At this, punch member *1* has its down stroke and shaft *9* is stationary. At the instant joint *a* contacts adjustable stop *b*, sliding link *5* begins to compress spring *8*. During the upward return stroke of punch member *1*, link *5* begins its upward stroke only after spring *8* has reached its initial length. After this, pawl *4* engages the teeth of ratchet wheel *2* and turns the wheel together with shaft *9* and a device (not shown) feeds new blanks to the lower die and ejects the finished stampings. Guide *6* is rigidly attached to crosspiece *7*. Owing to the action of spring *8*, the feed mechanism is engaged at the required instant.

2780	RATCHET-TYPE INTERMITTENT FEED MECHANISM	RG SF

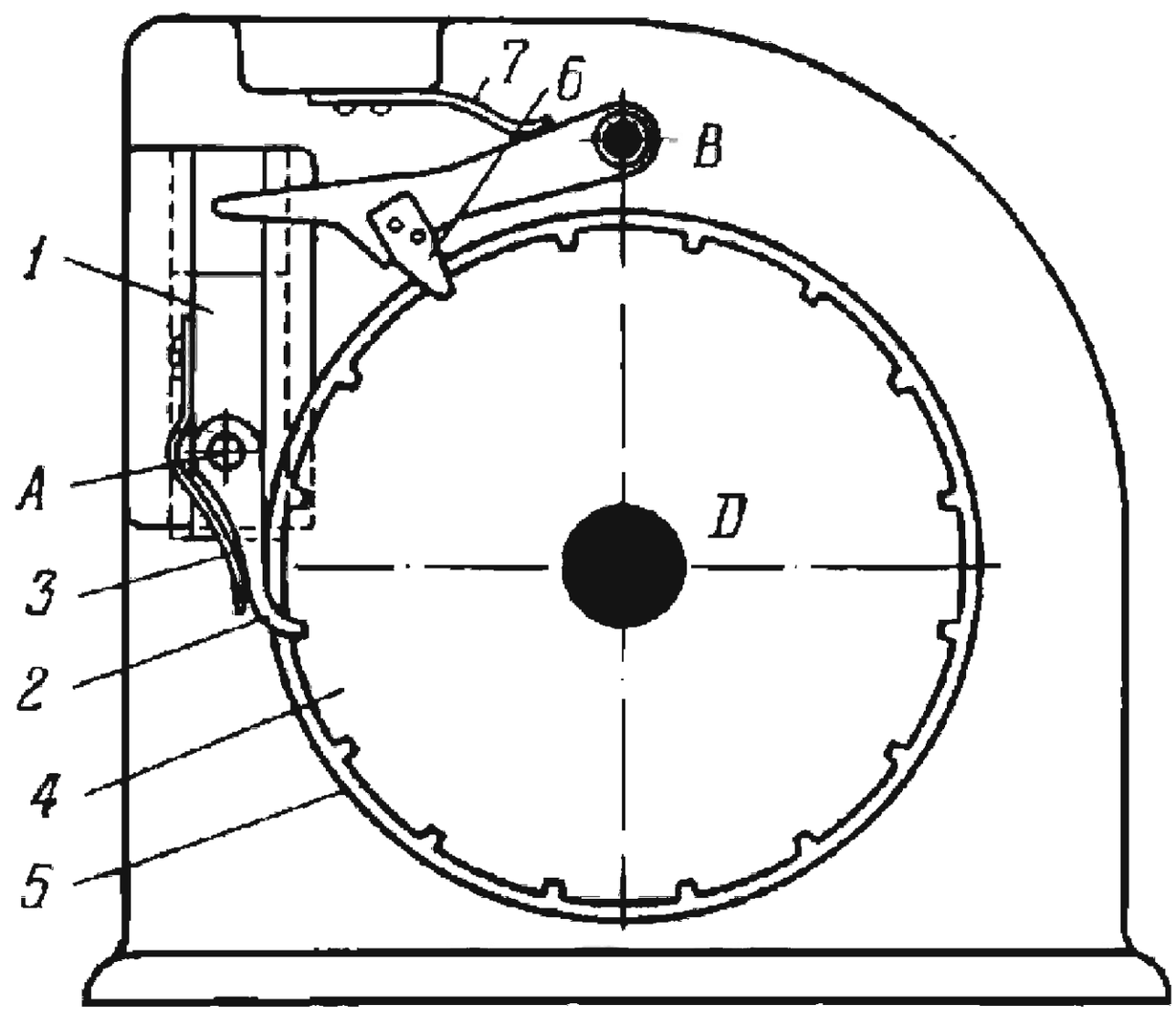

In the downstroke of reciprocating slide *1*, pawl *2* engages a notch of wheel *4* and turns it together with feeding disk *5* about fixed axis *D*. Pawl *2* is connected by turning pair *A* to slide *1* and is held in engagement with wheel *4* by spring *3*. Wheel *4* is locked in each indexed position by member *6* which turns about fixed axis *B* and is held in the locked position by spring *7*. In the upstroke of slide *1*, pawl *2* is withdrawn from the notch of wheel *4* and its pin *A* lifts locking member *6*, overcoming the resistance of spring *7*. Before locking member *6* enters the next notch, pawl *2* begins its downstroke, engaging its next notch and turning wheel *4*.

2781	RATCHET-TYPE SWITCH MECHANISM	RG SE

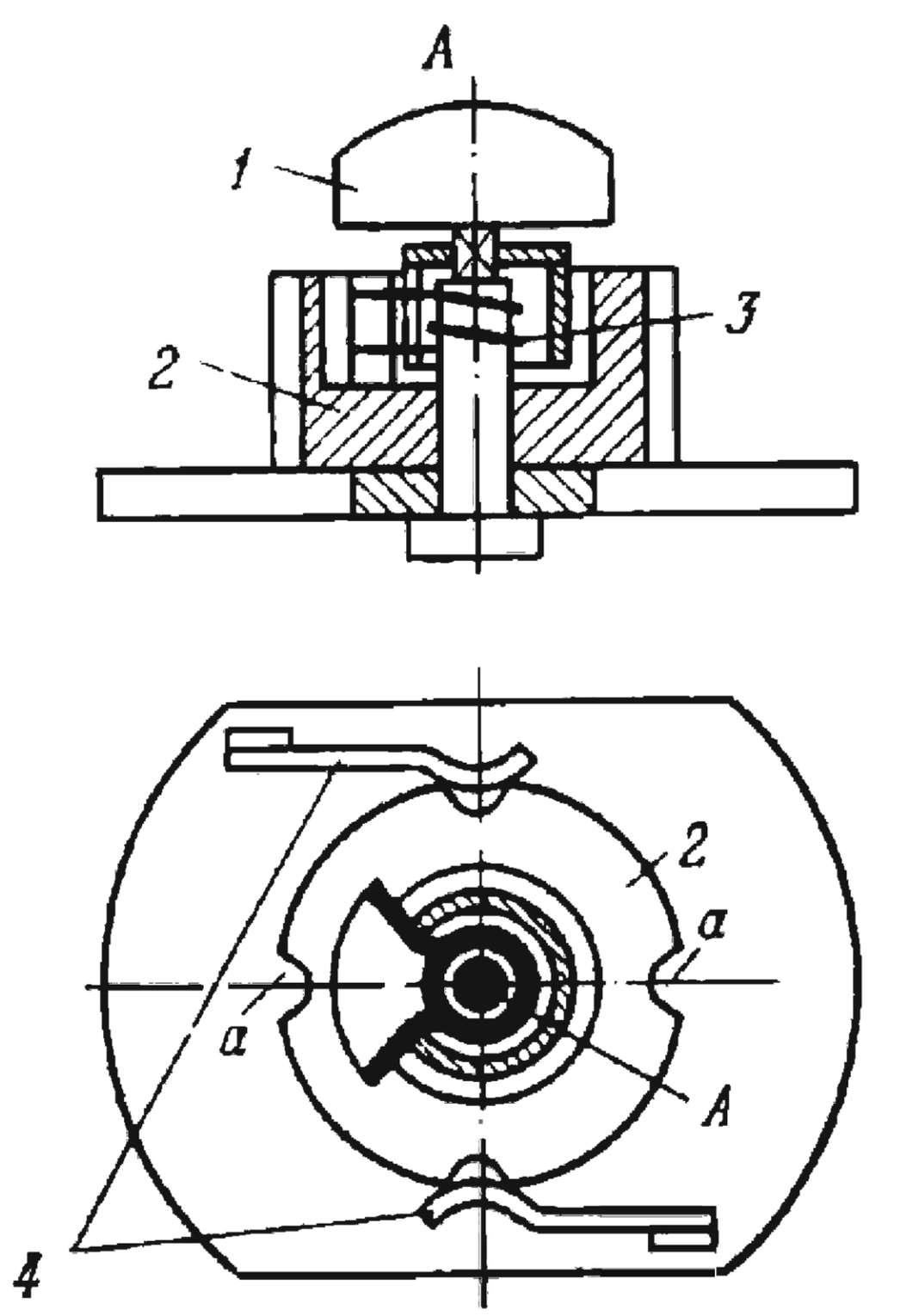

When handle *1* is turned about fixed axis *A*, link *2* is turned by spring *3* from one indexed position to another in which it is locked by spring pawls *4* that engage notches *a* of link *2*.

2782	RATCHET MECHANISM OF A PRECISION REVOLUTION COUNTER	RG FD

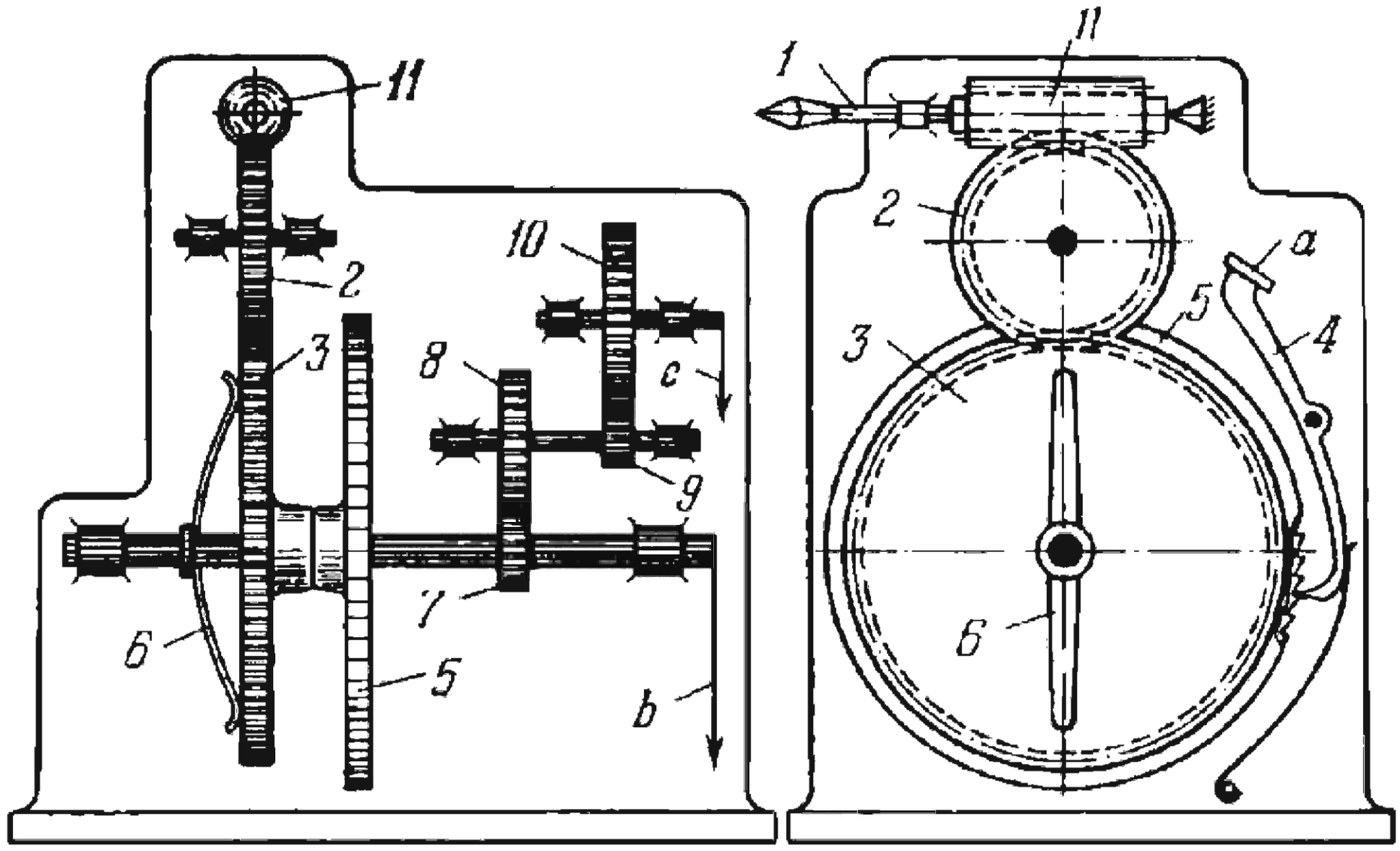

When spindle *1* is connected to the shaft whose revolutions are to be counted, worm *11*, worm wheel *2* and gear *3* begin to rotate. When button *a* is pressed, pawl *4* is disengaged from ratchet wheel *5* which is keyed to a shaft with flat spring *6* and begins to rotate due to friction between the spring and gear *3*. This leads to rotation of gears *7*, *8*, *9* and *10* which transmit rotation to hands *b* and *c*. The numbers of teeth of the gears are selected so that hand *b* makes 10 revolutions to 1000 revolutions of spindle *1*, and hand *c* makes only one revolution.

2783	RATCHET MECHANISM OF AN INDEXING DEVICE	RG FD

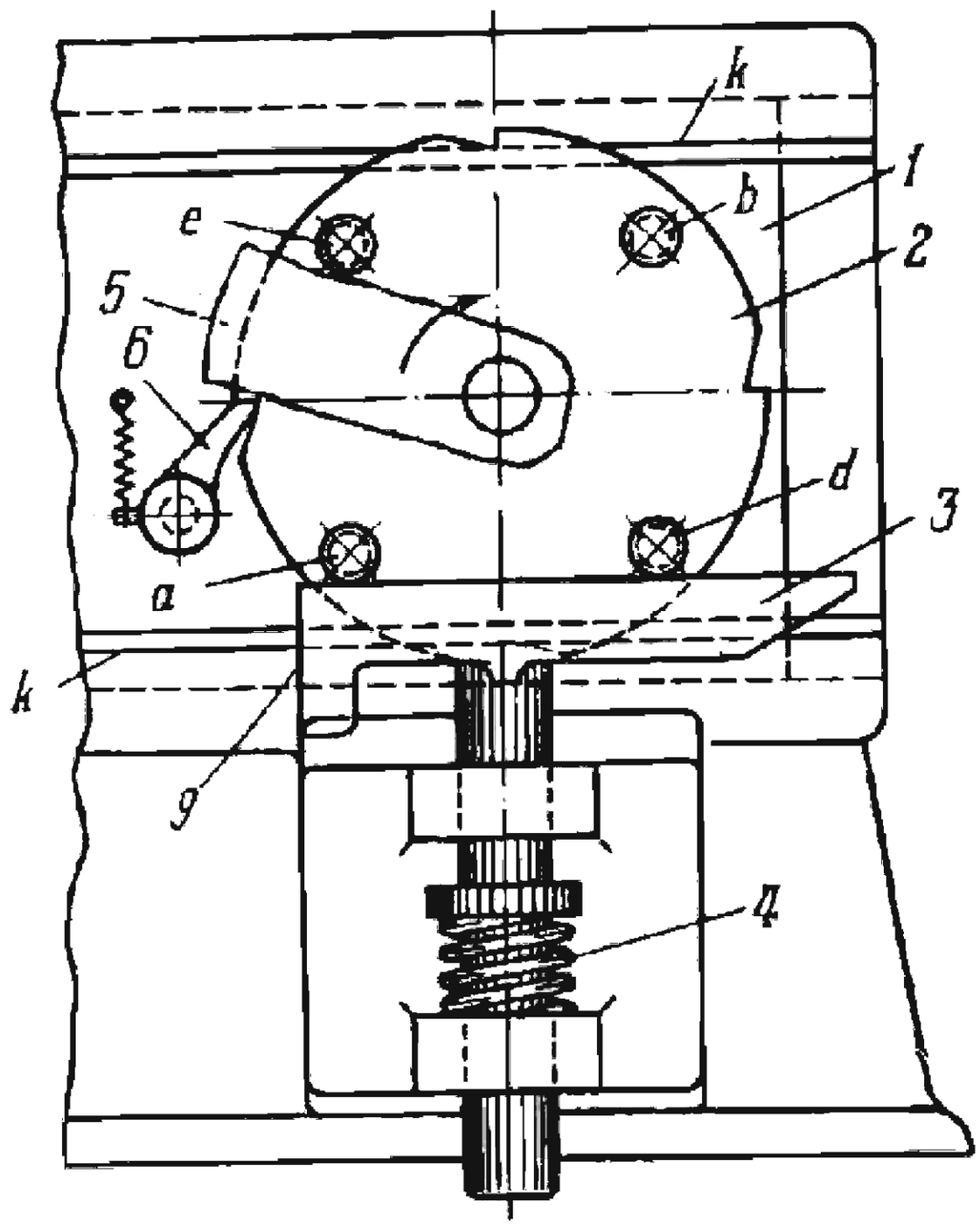

When slide *1* with ratchet wheel *2* travels to the left in fixed guides *k-k*, blade *3* remains stationary in the position shown until pin *d* of wheel *2* leaves the heel of blade *3*. Then blade *3* is forced upward by spring *4* a distance less than the diameter of pin *d*. Further upward motion is restricted by the collar on the stem of blade *3*. When, before this, pin *a* leaves blade *3*, upward motion of the blade with counterclockwise rotation of wheel *2* is prevented by pawl *6*, pivoted on slide *1* and engaging the teeth on wheel *2*. When slide *1* travels to the right, pin *d* runs up against surface *g* of blade *3* turning wheel *2* together with disk *5* (only a part of the disk is shown) clockwise until pin *b* pushes blade *3* downward to its lower position and pins *d* and *b* slide along the blade. Since pins *a*, *d*, *b* and *e* are located at angles of 90°, disk *5* is indexed 90° to each full stroke, back and forth, of slide *1*. Pawl *6* prevents counterclockwise rotation of disk *5*.

2784	RATCHET MECHANISM OF THE REVYAKIN SPRING-TYPE TENSION DYNAMOGRAPH	RG FD

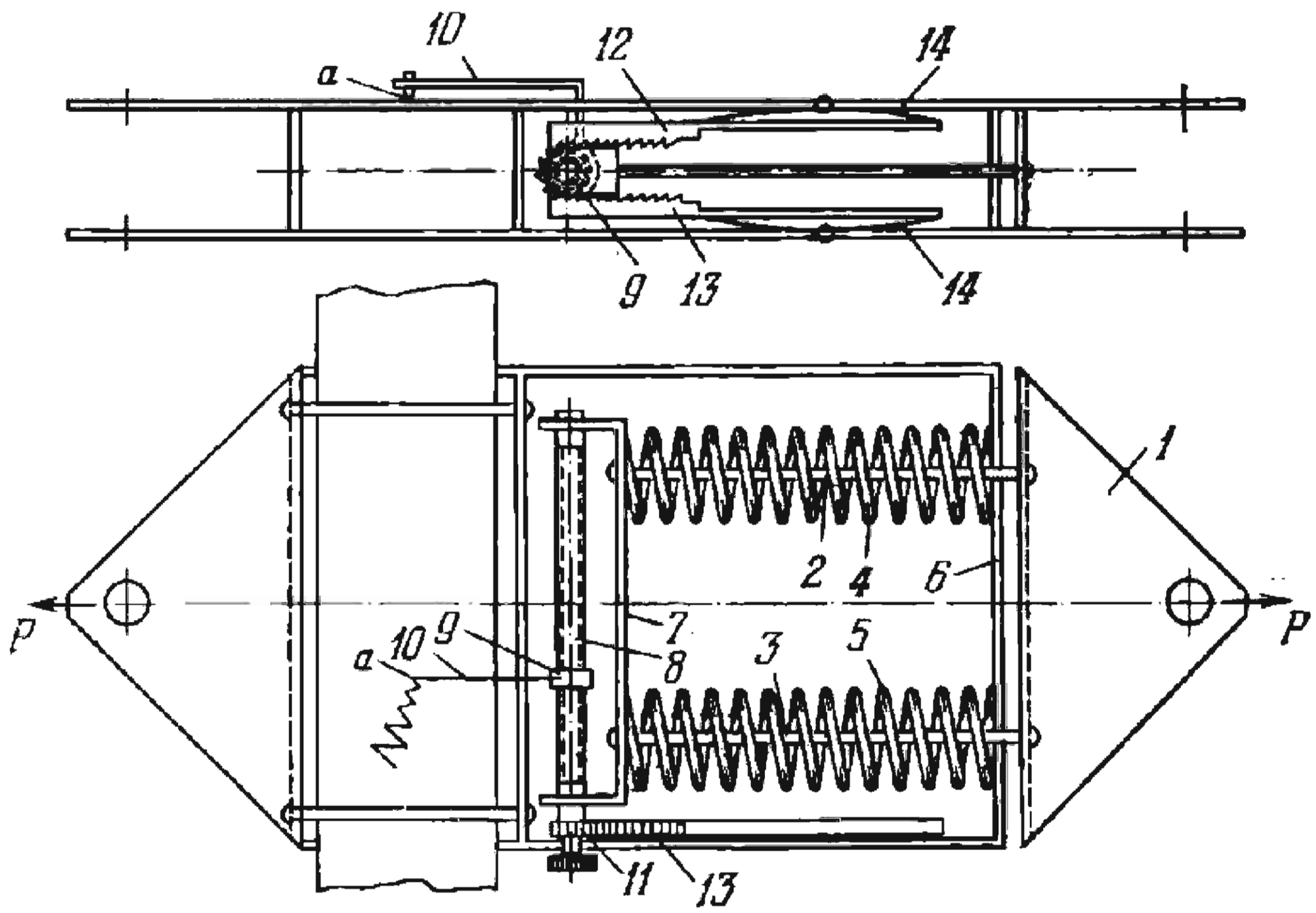

Pulling force *P*, applied to link *1*, is transmitted by tie-rods *2* and *3* to helical springs *4* and *5* which are arranged between frame *6* of the instrument and movable crosspiece *7*. Crosspiece *7* carries screw *8* along which nut *9* travels with lever *10* and pencil *a*. Pencil *a* moves along a chart in the direction of force application, and simultaneously in the direction perpendicular to this force by means of ratchet wheel *11* whose teeth are engaged from two sides by racks *12* and *13*. The racks are attached to the body of the instrument by flat springs *14* which hold them in engagement with the ratchet wheel. When springs *4* and *5* are compressed, ratchet wheel *11* is turned counterclockwise by rack *12*; when the springs are released, it is turned in the same direction by rack *13*.

2785	AUTOMATIC RATCHET-TYPE COUNTER FOR A LOG CHAIN CONVEYER	RG FD

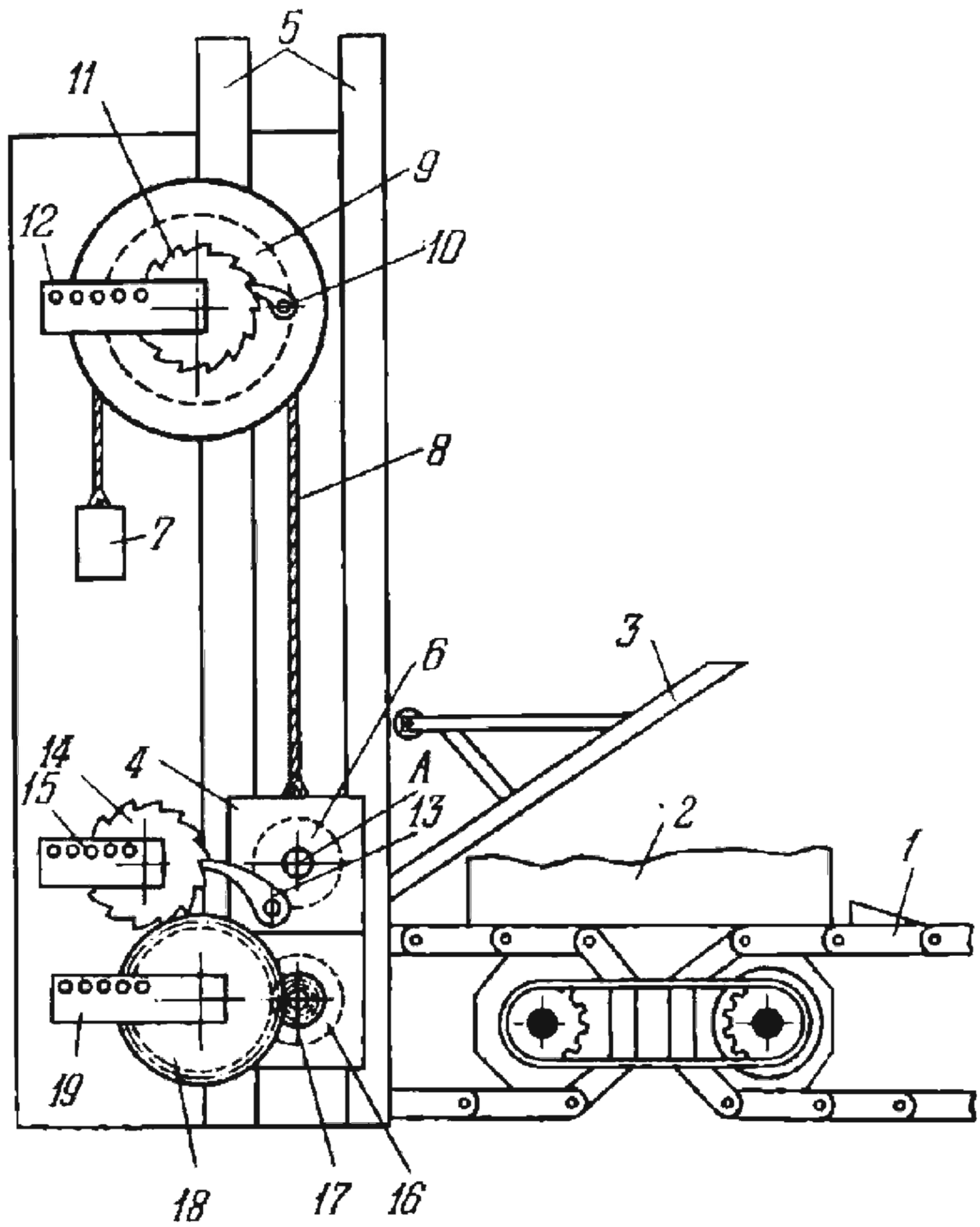

As log *2* is carried by chain conveyer *1*, it lifts bracket *3* to which slide *4* is rigidly attached. Slide *4* moves along parallel guides *5* and carries roller *6* which rotates freely about axis *A*. When slide *4* is raised, weight *7*, suspended by rope *8*, descends and turns disk *9* counterclockwise. The rotation of disk *9* is transmitted by pawl *10* and ratchet wheel *11* to counter *12* which registers the sum of the diameters of the logs passing by the counter. Slide *4* also carries pawl *13* which turns ratchet wheel *14* in the upstroke of the slide, transmitting rotation to counter *15*. This counter registers the number of logs passing by. As the log passes between fluted rollers *6* and *16*, it rotates lower roller *16*. This rotation is transmitted by gears *17* and *18* to counter *19* which registers the total number of running metres of the logs passing by. After each log has passed, roller *6*, slide *4* and bracket *3* are returned by gravity to the initial position and, by means of rope *8*, they return disk *9* to its initial position.

2786	RATCHET DIAL FEED MECHANISM	RG FD

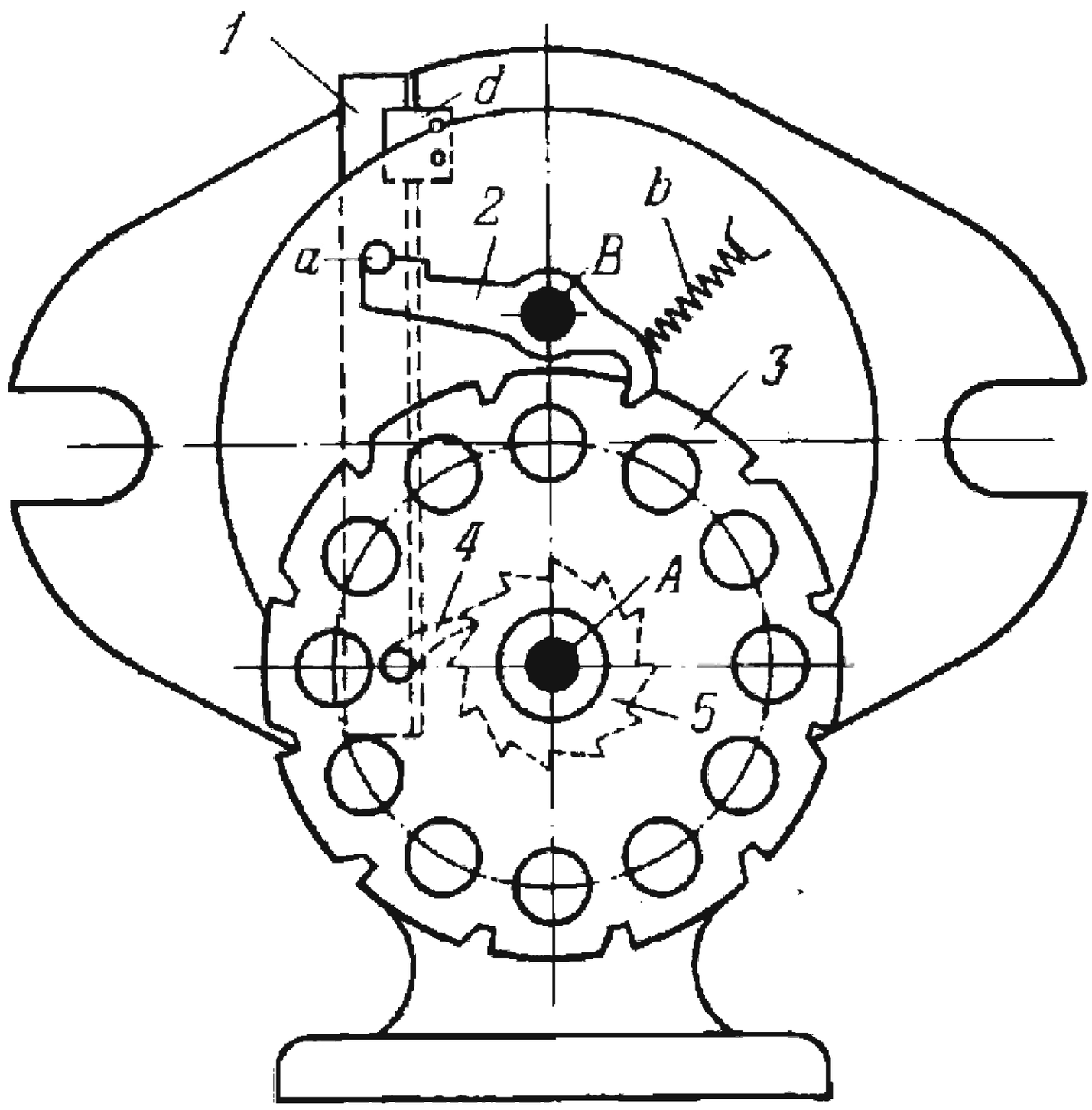

Feed dial *3* rotates about fixed axis *A*. In the downstroke of reciprocating slide *1* in fixed guide *d*, pin *a* turns pawl *2* about fixed axis *B* and releases feed dial *3*. At the same time, pawl *4*, pivoted on slide *1*, disengages a tooth of ratchet wheel *5*, sliding over the next tooth with which it is brought into engagement by a flat spring. In the upstroke of slide *1*, pawl *4* turns ratchet wheel *5* through an angle corresponding to one tooth. Feed dial *3* is rigidly attached to wheel *5* and is thus indexed one station. At the same time, pawl *2* is released by pin *a* and is forced by spring *b* into the next notch of dial *3*, locking the dial in its indexed position.

2787	RATCHET MECHANISM FOR SHIFTING A TYPEWRITER CARRIAGE	RG FD

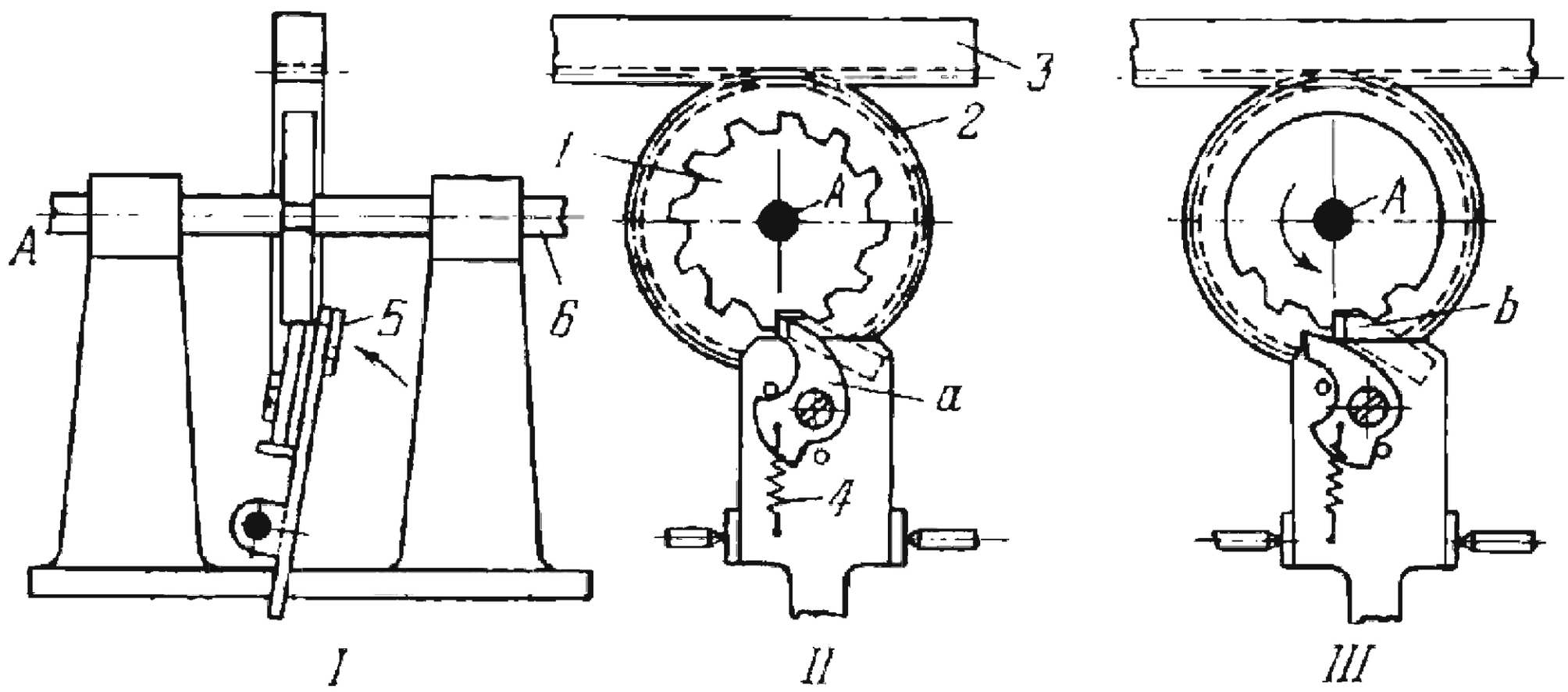

Ratchet wheel *1* is keyed to shaft *6* and rigidly attached to gear *2* which meshes with rack *3*. Rack *3* is attached to the typewriter carriage. A constant torque is applied to wheel *1* about fixed axis *A* (see View II). As a key is struck, member *5* turns counterclockwise (see View I), movable pawl *a* is disengaged from a tooth space of wheel *1*, being replaced by pawl *b* (see View III) so that ratchet wheel *1* cannot rotate. As soon as pawl *a* disengages wheel *1*, it is turned by spring *4* to the position shown in View III. As member *5* swings back clockwise (see View I), pawl *b* is disengaged from the tooth space and ratchet wheel *1* is thereby released, but in turning it engages movable pawl *a* which is near the next tooth space. Thus, ratchet wheel *1* can only turn through an angle corresponding to one tooth.

2788	RATCHET MECHANISM OF A PENDULUM CLOCKWORK DRIVE	RG FD

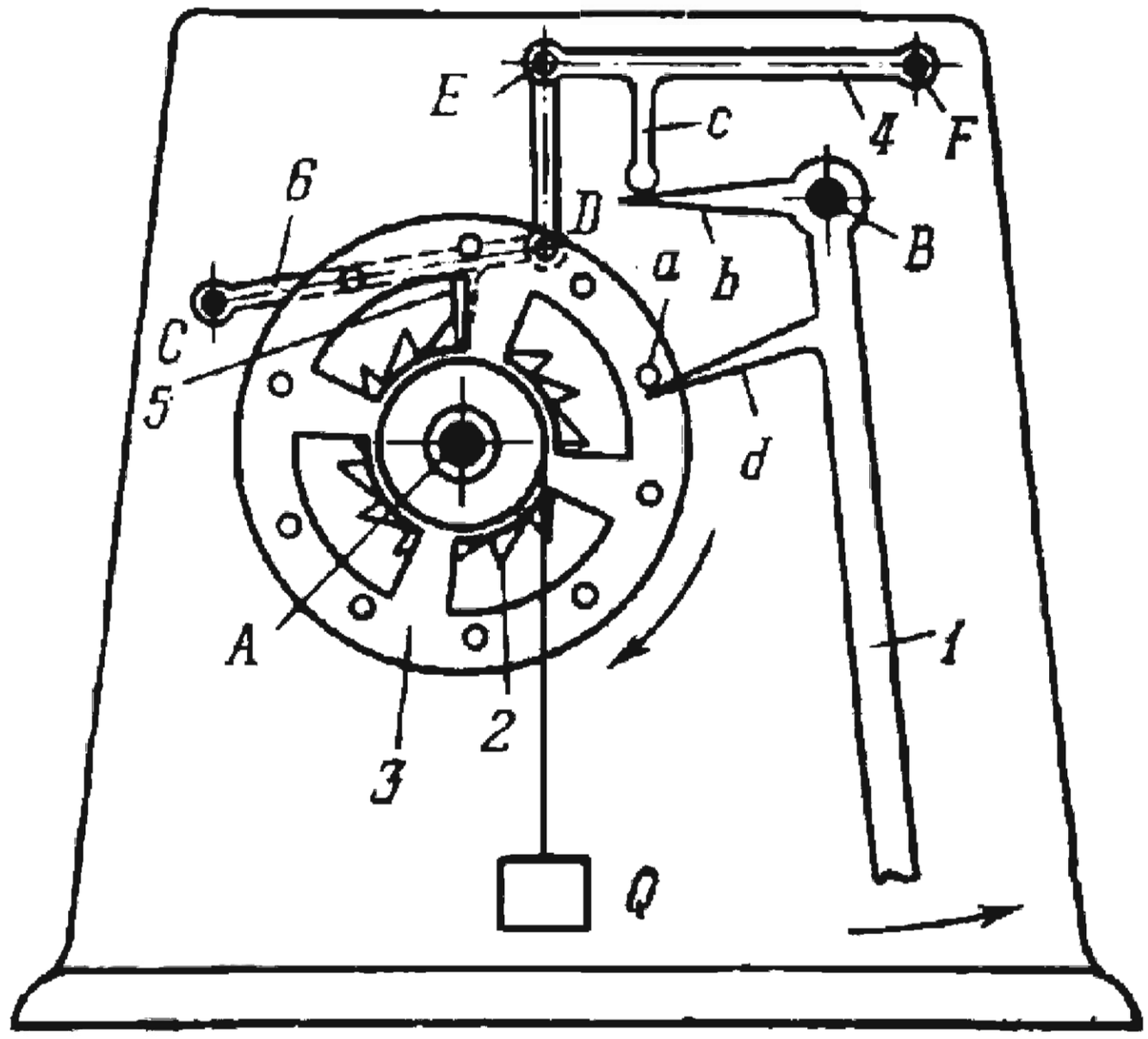

A clockwise torque is applied by weight *Q* about fixed axis *A* to pin wheel *3* which is rigidly attached to ratchet wheel *2*. Pendulum *1* oscillates about fixed axis *B* and is turned counterclockwise by one of the pins *a* carried by pin wheel *3*. This releases pawl *5* of rocker arm *6* in double-swing linkage *CDEF*. Rocker arms *6* and *4* turn about fixed axes *C* and *F*. Pawl *5* engages a tooth of ratchet wheel *2*, thereby stopping the wheel. In its back swing, pendulum *1*, with its upper pallet *b*, raises lug *c* of rocker arm *4*, disengaging pawl *5* from ratchet wheel *2*. Then the next pin *a* on wheel *3* strikes pallet *d* of the pendulum, swinging it to the right again.

2789	RACK-TYPE ESCAPEMENT MECHANISM OF A TYPEWRITER CARRIAGE	RG FD

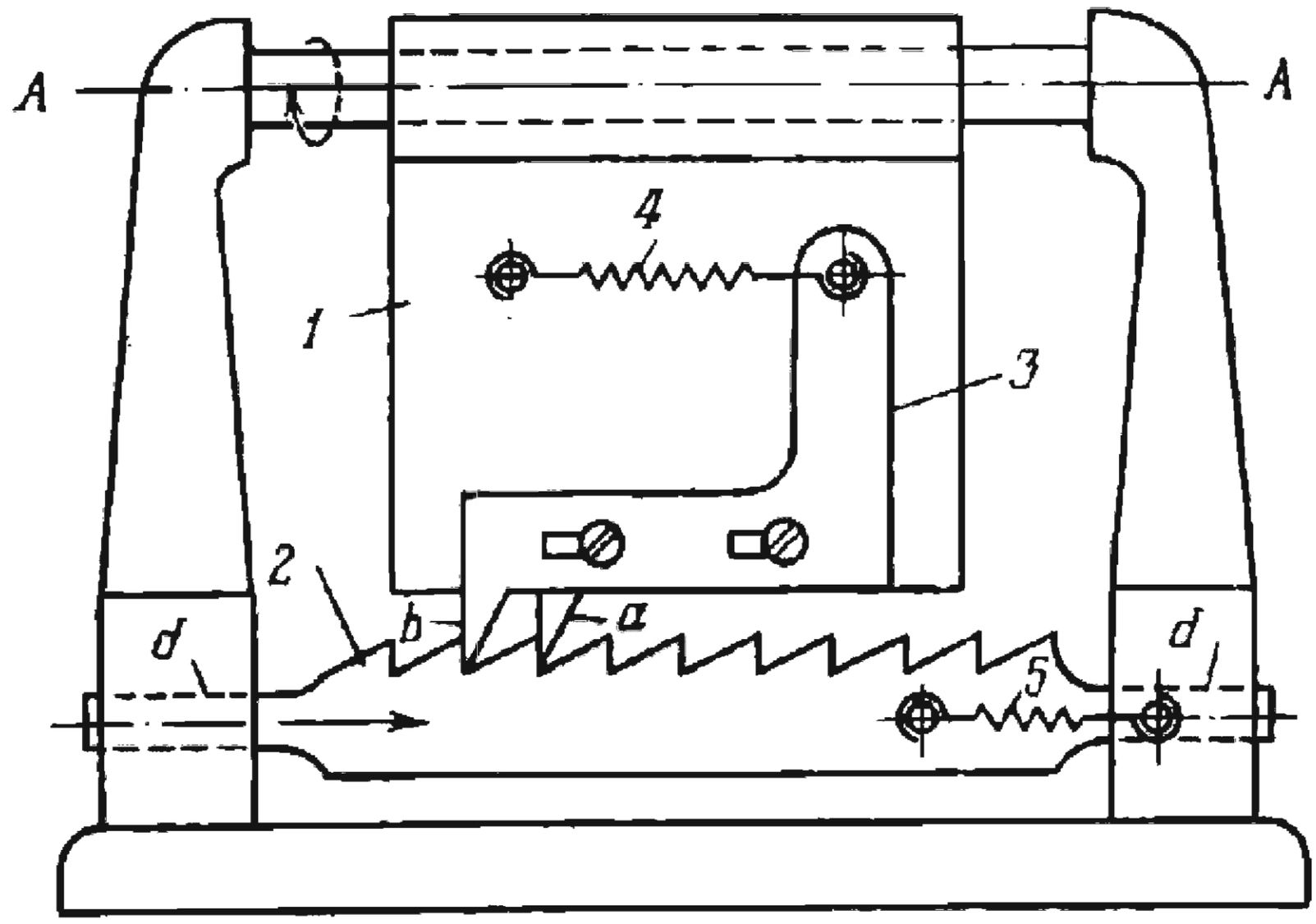

When plate *1* oscillates about fixed axis *A-A* in a plane perpendicular to that of the drawing, ratchet-tooth rack *2* is shifted by spring *5* to the right in fixed guides *d-d* as soon as tooth *a*, rigidly attached to plate *1*, swings out of engagement with a tooth of rack *2*. In its motion to the right, rack *2* shifts angle plate *3* whose tooth *b* remains in engagement with a tooth of rack *2* as plate *1* swings beyond the plane of the drawing. Spring *4* returns plate *3* to the initial position when plate *1* swings to its other extreme position, in front of the plane of the drawing, and tooth *b* swings out of engagement with the tooth of rack *2*, but tooth *a* engages the next rack tooth.

2790	GEAR-RATCHET MECHANISM OF A PRINTING DEVICE	RG FD

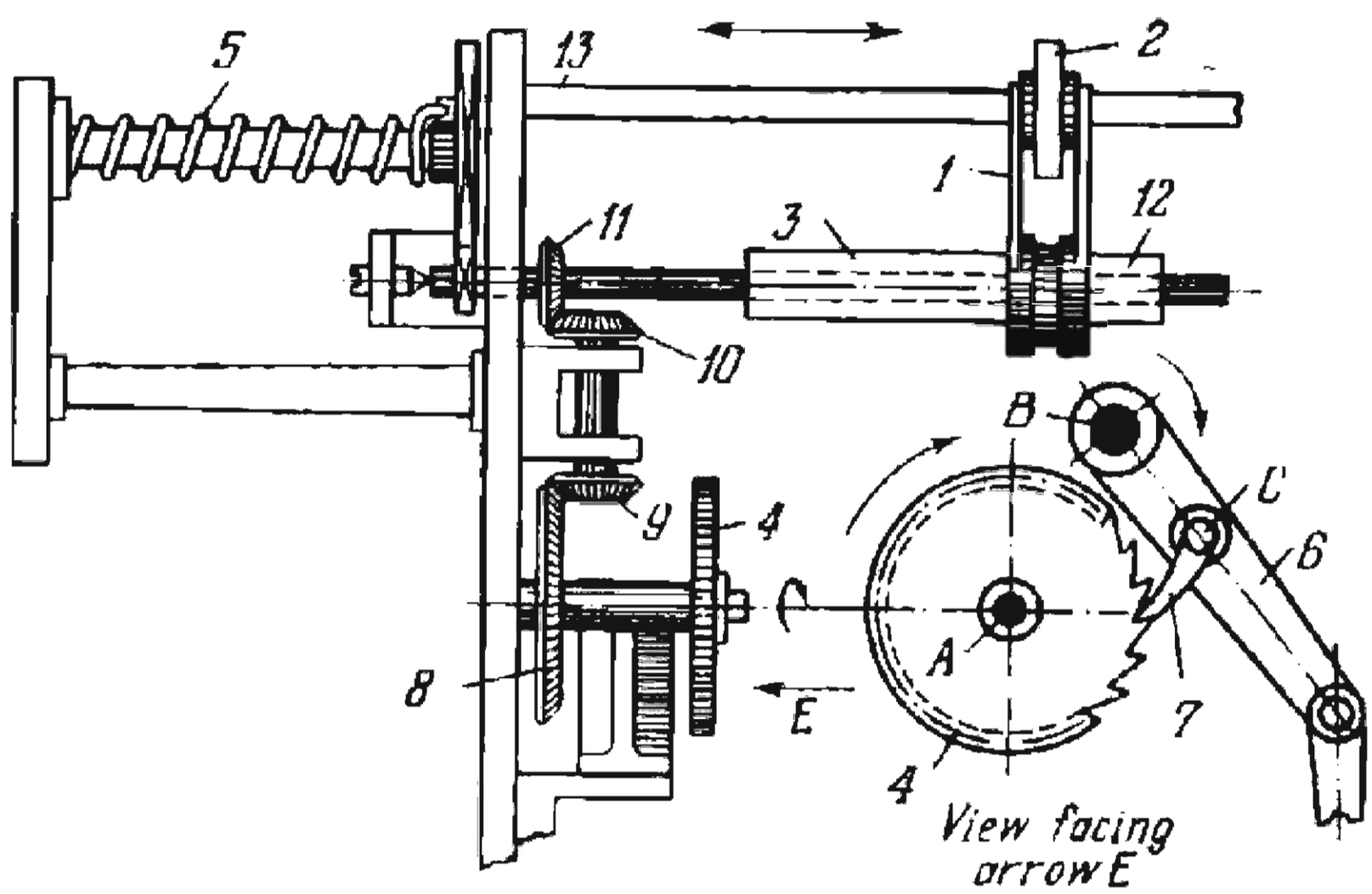

Ratchet wheel *4* rotates intermittently about fixed axis *A* and is driven by pawl *7* which turns about axis *C* of lever *6*. Lever *6* oscillates about fixed axis *B*. Keyed to the same shaft as wheel *4* is bevel gear *8* which meshes with bevel pinion *9*. Bevel pinion *10* is rigidly attached to pinion *9* and meshes with bevel gear *11* which is keyed to shaft *3*. Threaded shaft *3* is connected by a screw pair to carriage *1* which slides along shaft *13* and carries type wheel *2*. Thus, by means of paper-feeding ratchet wheel *4* and a train of bevel gears, carriage *1* travels intermittently to the right. During this motion, spring *5* is wound up. When pawl *7* is withdrawn, spring *5* rotates shaft *3* in the opposite direction, returning carriage *1* to its initial position.

SECTION SEVENTEEN

Cam-Gear Mechanisms

CmG

1. General-Purpose Multiple-Link Mechanisms ML (2791 through 2794)
2. Dwell Mechanisms D (2795 through 2798)
3. Sorting and Feeding Mechanisms SF (2799, 2800 and 2801)
4. Mechanisms of Measuring and Testing Devices M (2802 and 2803)
5. Mechanisms for Generating Curves Ge (2804)
6. Mechanisms of Other Functional Devices FD (2805 and 2806)

2791	RAPID-RISE CAM-GEAR MECHANISM	CmG ML

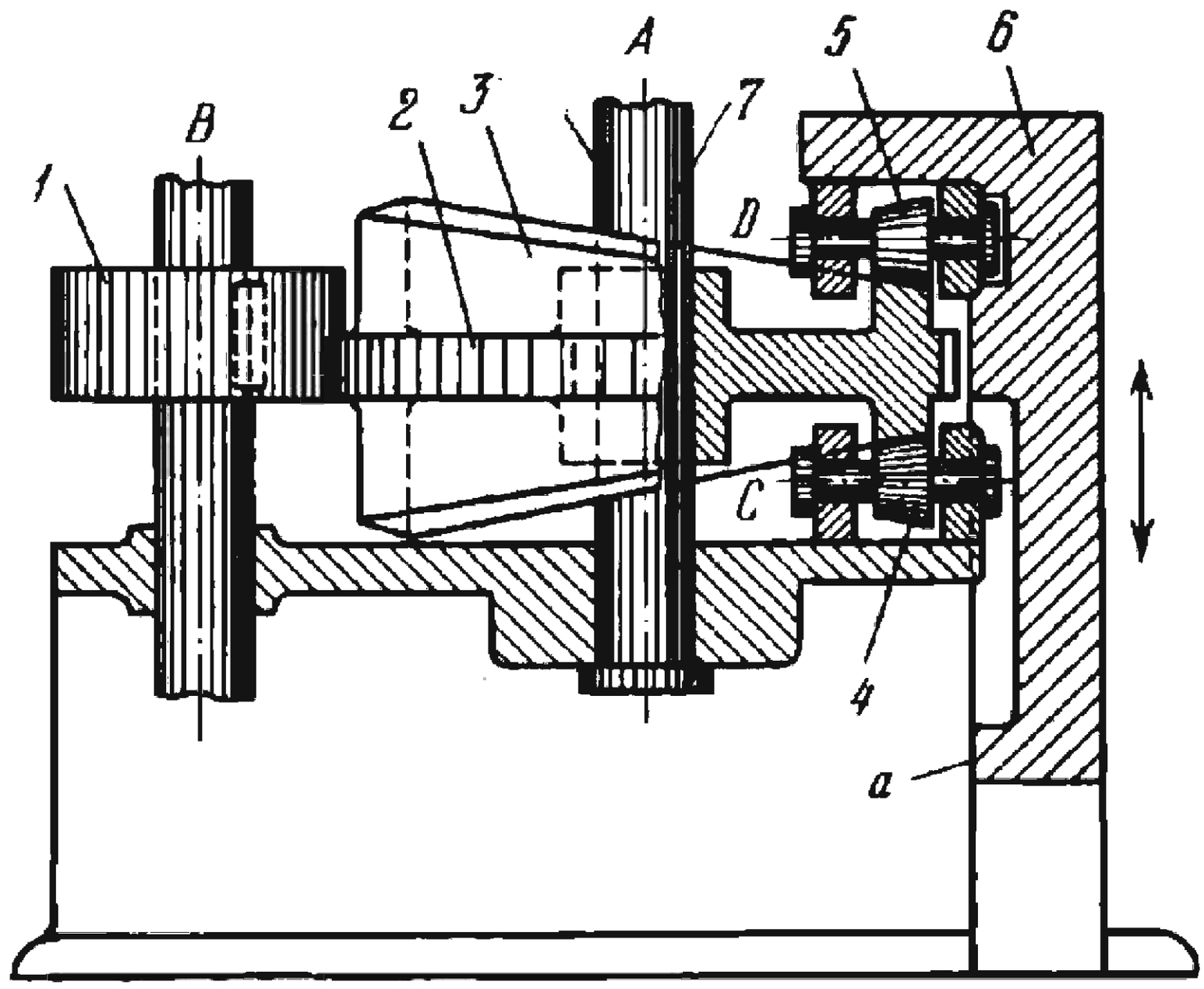

Gear *1* rotates about fixed axis *B* and meshes with gear rim *2* which is integral with double-faced cam *3*. Cam *3* rotates about fixed axis *A* and has a sliding fit on shaft *7*. Each face, or edge, of cam *3* has a rise equal to one-half the total rise required. The faces are in contact with tapered rollers *4* and *5*. Roller *4* rotates about fixed axis *C* of the base and roller *5* rotates about axis *D* of slide *6* which reciprocates vertically in fixed guide *a*. When driving gear *1* rotates, cam *3*, bearing with its lower face against roller *4*, rises and slide *6* travels upward parallel to axis *A* a distance equal to the leads of both cam faces. Gear *1* should have a face width sufficient to provide constant engagement with gear rim *2*.

2792	CAM-GEAR MECHANISM WITH INTERNAL ENGAGEMENT	CmG ML

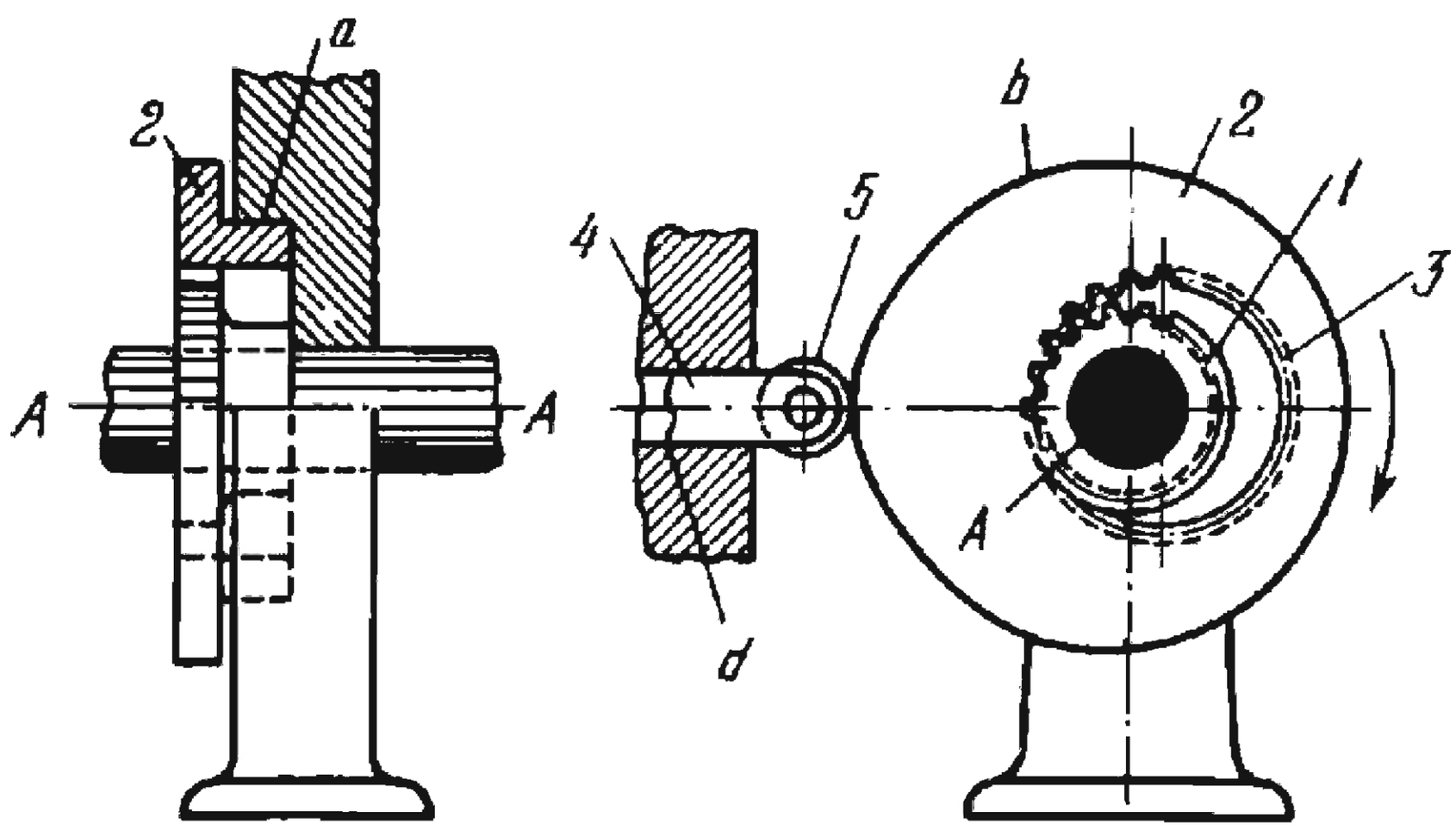

Gear *1* rotates about fixed axis *A* and meshes with internal gear *3* which is integral with cam *2*. Cam *2* rotates in fixed bore *a* whose axis is at a distance from axis *A* equal to the difference between the pitch radii of gear *3* and gear *1*. Cam surface *b* actuates roller *5* of follower *4* which slides in fixed guide *d*. When gear *1* rotates at a speed of n_1 rpm, cam *2* rotates at the speed $n_2 = \frac{z_1}{z_3} n_1$ rpm, where z_1 and z_3 are the numbers of teeth of gears *1* and *3*. Gear *1* and cam *2* rotate in the same direction.

2793	DIFFERENTIAL CAM-GEAR CLOSED-SYSTEM MECHANISM	CmG ML

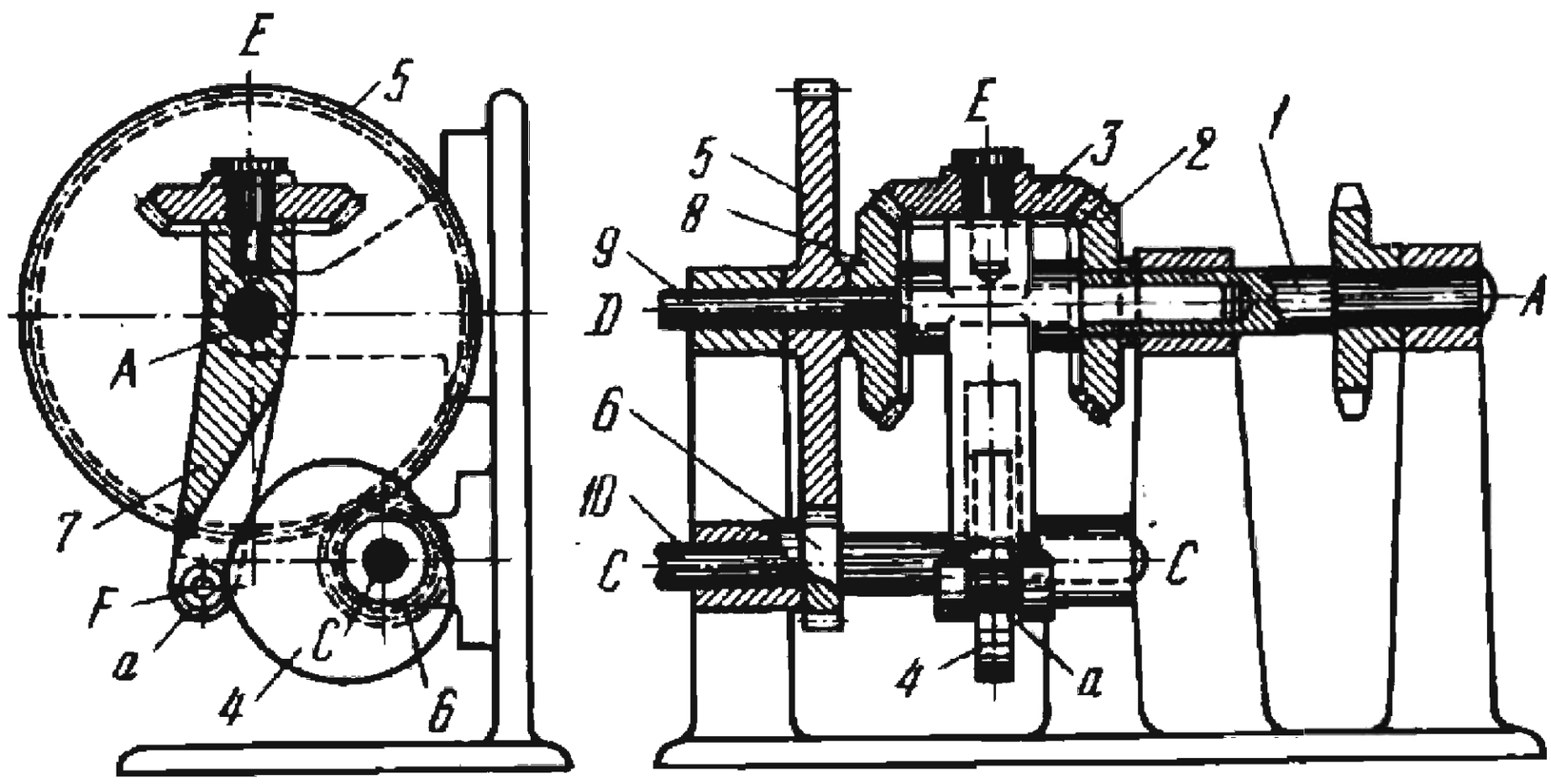

Driven shaft *1* rotates about fixed axis *A*. Bevel gear *2* is keyed to shaft *1* and meshes with bevel gear *3* which rotates freely about axis *E* of arm *7*. Arm *7* is free to turn on shaft *9* about fixed axis *D*. Gear *3* meshes with bevel gear *8* which is keyed to driving shaft *9*, rotating about axis *D*. Gears *2*, *3* and *8* have the same number of teeth and, together with arm *7*, constitute a bevel-gear differential with the transmission ratio $i_{29} = -1$. The closing train of the differential gearing consists of gear *5*, keyed to shaft *9*, which meshes with gear *6* keyed to shaft *10*. Shaft *10* rotates about fixed axis *C*. Also keyed to shaft *10* is cam *4* whose cam surface engages roller *a* of arm *7*. When shaft *9* rotates at uniform velocity, shaft *1* has a complex intermittent motion whose character depends on the shape of cam *4*.

2794	CAM-GEAR MECHANISM WITH COMPLEX MOTION OF THE DRIVEN LINK	CmG ML

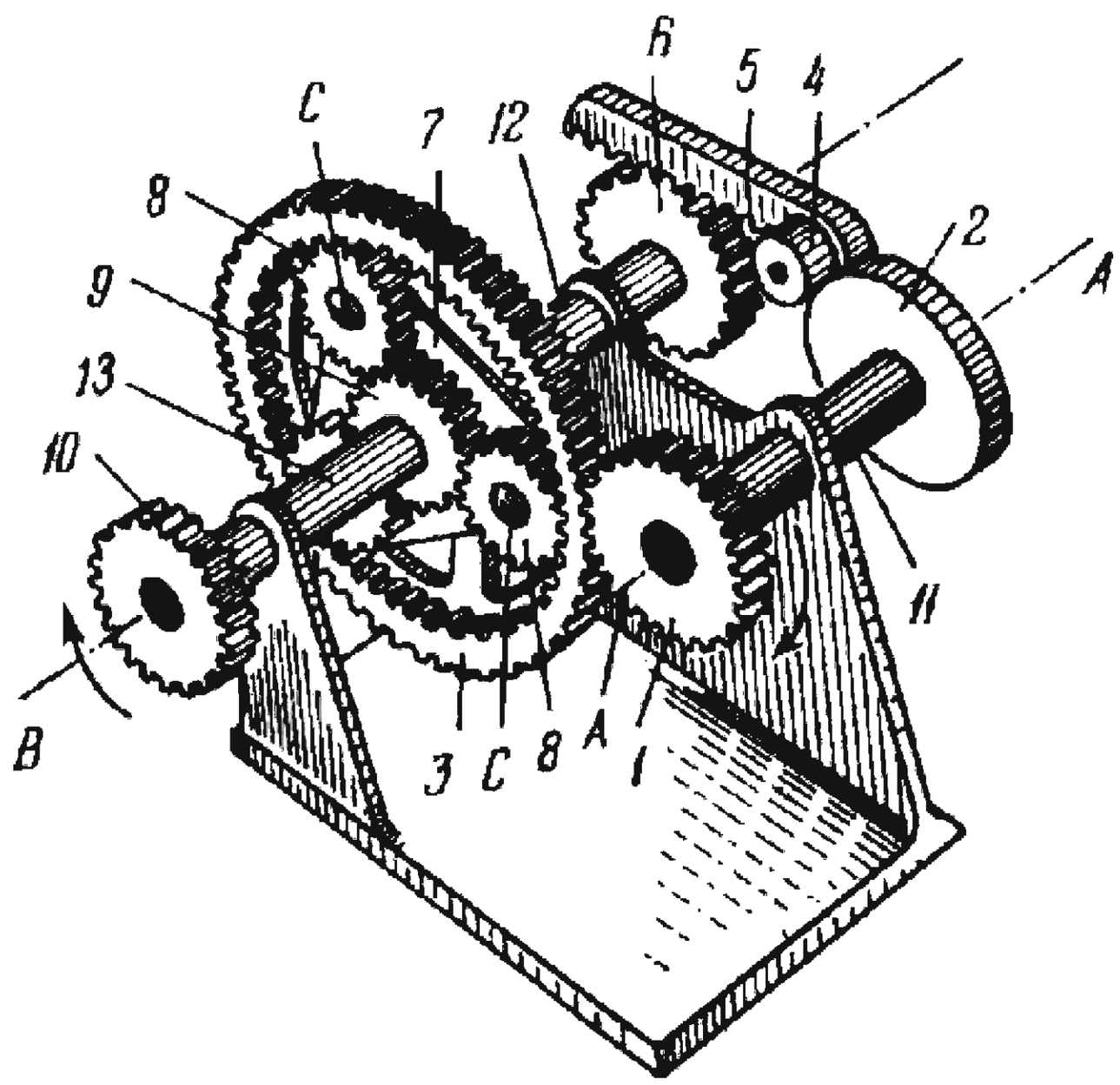

Gear *1* and cam *2* are keyed to driving shaft *11* which rotates about fixed axis *A*. Gear *1* meshes with the external teeth of gear *3* whose internal teeth mesh with three planet pinions *8*. Pinions *8* mesh with sun gear *9* which is keyed to shaft *13*, rotating about fixed axis *B*. Cam *2* engages roller *4* of rack *5* which meshes with gear *6*. Gear *6* is keyed on shaft *12*. Also keyed on shaft *12* is carrier *7* which is connected by turning pairs *C* to pinions *8*. When shaft *11* rotates at uniform velocity, shaft *13*, on which gear *10* is keyed, has a complex motion whose character depends upon the shape of cam *2*.

2795	CAM-GEAR SPATIAL ADJUSTABLE DWELL MECHANISM	CmG D

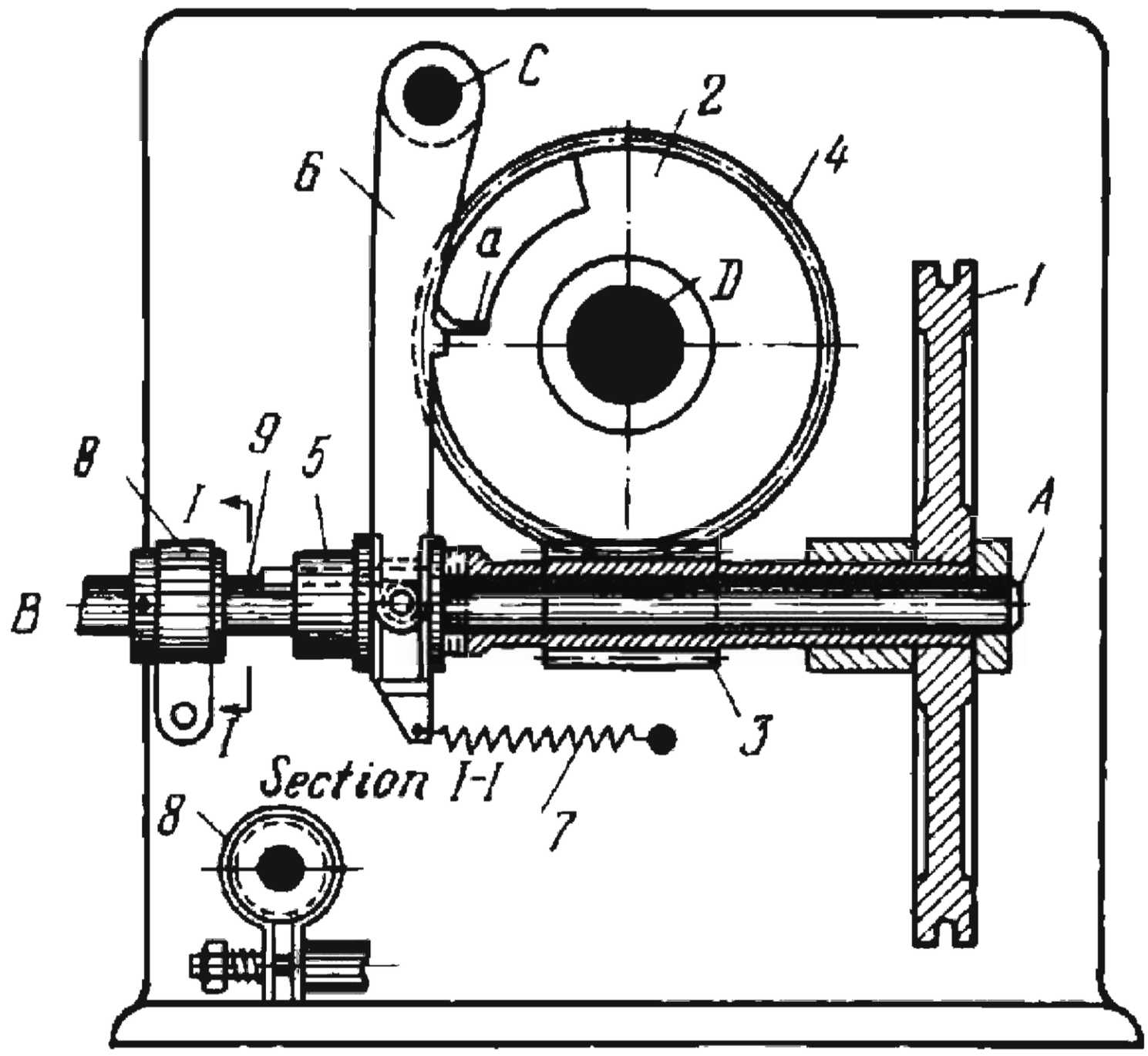

Worm *3* is integral with a sleeve and is rotated about fixed axis *A* by driving pulley *1* keyed to the right end of the sleeve. On the left end face of the worm sleeve is a clutch tooth which engages clutch member *5*. Clutch member *5* slides along a key on shaft *9* which is the driven shaft and rotates freely in worm sleeve *3* about fixed axis *B*. Worm *3* meshes with worm wheel *4* which rotates about fixed axis *D* and is rigidly attached to cam *2* carrying cam lobe *a*. Lobe *a* periodically turns lever *6* clockwise about fixed axis *C*, shifting clutch member *5* to the left, out of engagement with worm sleeve *3* and tensioning spring *7*. As a result, shaft *9* rotates intermittently with dwells whose length can be regulated by changing cam *2*. Band brake *8* has a lined contact surface that exerts a constant pressure on a drum keyed to shaft *9*, stopping the shaft rapidly when its dwell periods begin.

2796	CAM-LEVER PLANETARY MECHANISM WITH VARIABLE DWELL OF THE DRIVEN LEVER	CmG D

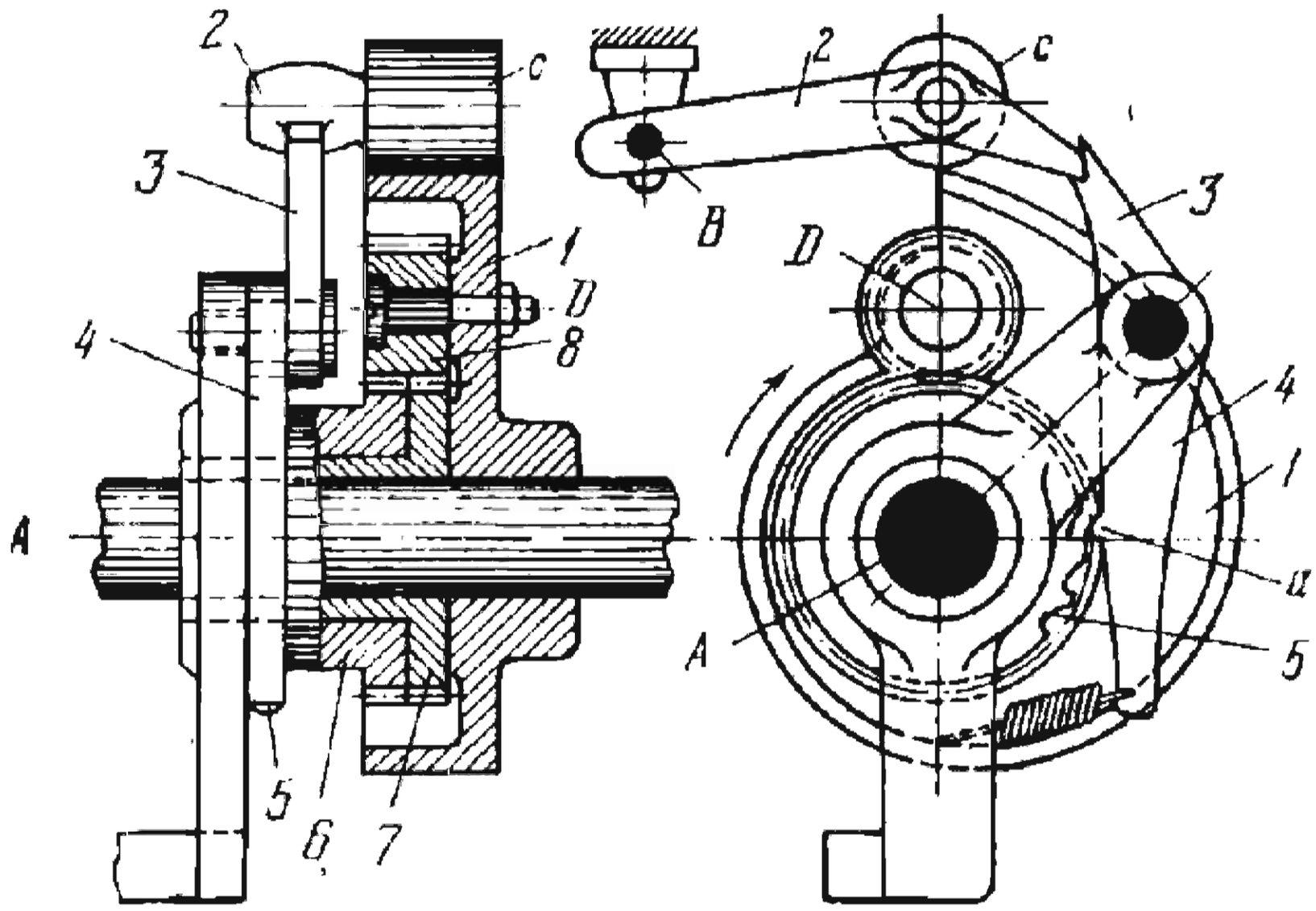

Cam *1* rotates clockwise about fixed axis *A* and turns lever *2* with follower roll *c* about fixed axis *B*. When roll *c* is lifted to its highest point and tooth *a* of the pawl rides on the periphery of cam *5*, lever *2* is held in this position by latch *3*, which is integral with pawl *4*. Cam *5* has ratchet-shaped notches and is integral with gear *6* with which it rotates freely on the hub of fixed sun gear *7*. Gear *6* has one tooth less than gear *7*. Meshing with gears *6* and *7* is planet pinion *8* which rotates about axis *D* of a pin carried by cam *1*. When cam *1* rotates continuously, cam *5*, due to the difference of one tooth in the numbers of teeth of gears *6* and *7*, rotates at a much slower speed than cam *1* and varies the lengths of the dwell of lever *2* in its oscillating motion.

2797	CAM-GEAR SPATIAL DWELL MECHANISM	CmG D

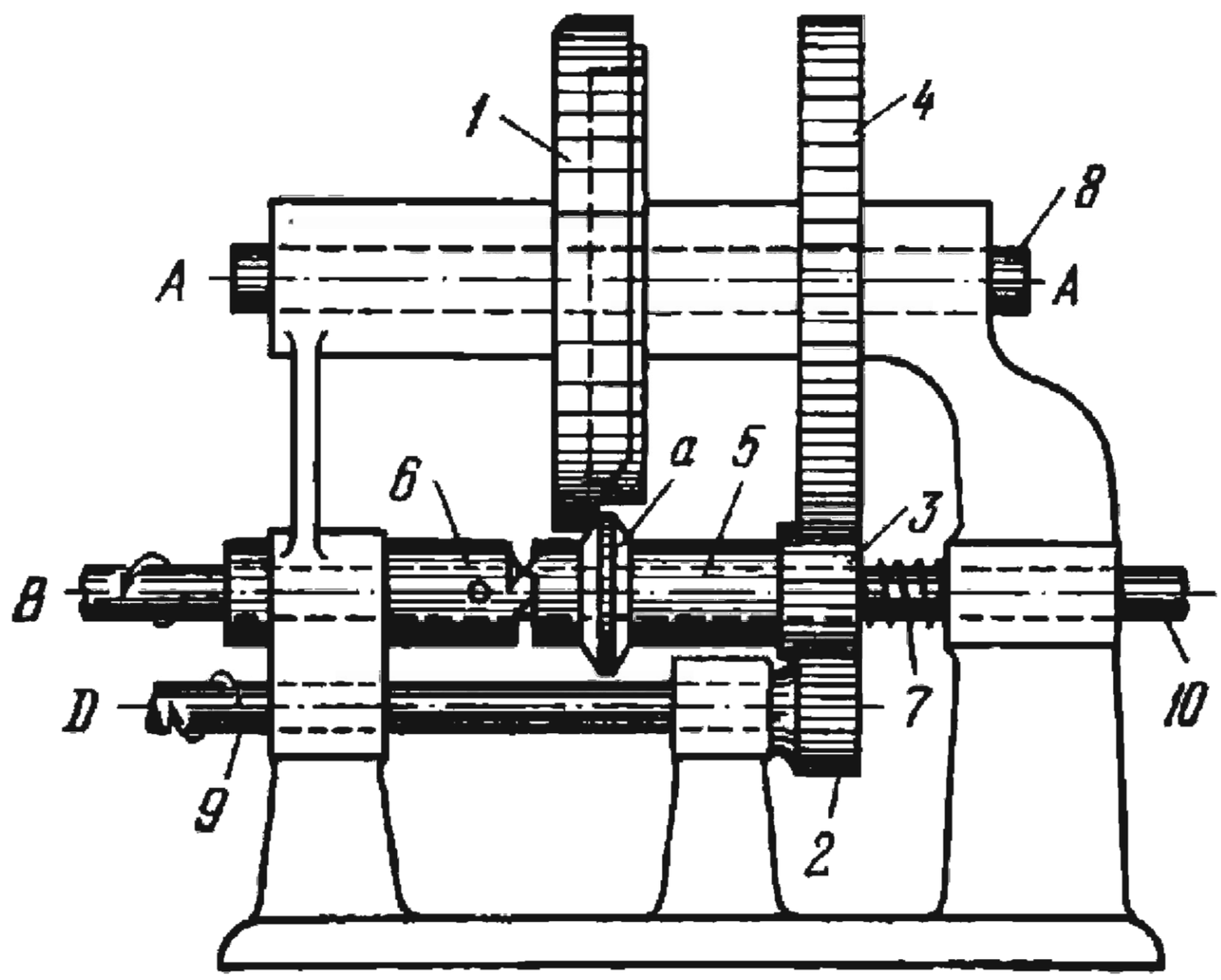

Cylinder cam *1* is keyed to shaft *8* which rotates about fixed axis *A-A*. Cam *1* is driven from driving shaft *9* which rotates about fixed axis *D*. Pinion *2* is keyed to shaft *9* and meshes with gear *3* which is integral with sleeve *5* and rotates freely on and slides along shaft *10*. Gear *3* meshes with gear *4* which is keyed to shaft *8*. The cam surface of cam *1* engages collar *a* of sleeve *5*. Two-jaw clutch member *6* is keyed to shaft *10* which rotates about fixed axis *B*. A jaw provided at the left end of sleeve *5* engages one of the jaws of member *6*. When driving shaft *9* rotates, cam *1* periodically disengages the jaws of member *6* and sleeve *5* so that driven shaft *10* has dwells. The clutch jaws are re-engaged by spring *7*. Gear *3* is wider than gears *2* and *4* by the amount of axial motion of sleeve *5*,

2798	CAM-GEAR PLANETARY DWELL MECHANISM	CmG D

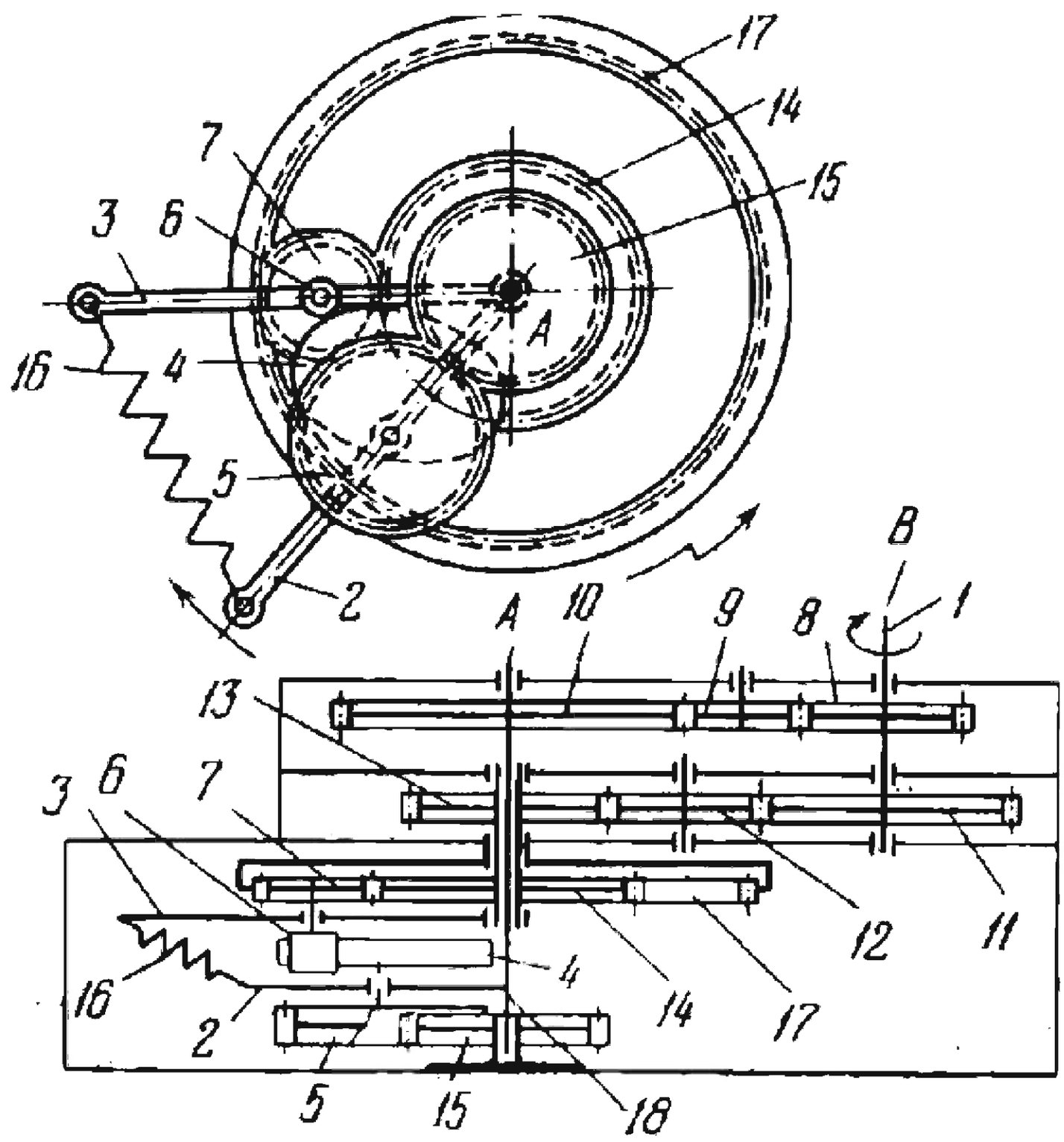

Cam *4* and planet gear *5* are keyed to the stud of carrier *2* which rotates about fixed axis *A*. Follower roll *6* and planet gear *7* are mounted on the stud of carrier *3* which rotates about axis *A*. Carrier *2* is keyed to shaft *18* and is driven by driving shaft *1* through gears *8*, *9*, and *10*. Planet gear *7* is rotated about its own axis by driving shaft *1* through gears *11*, *12*, *13* and *14*. The last two gears are keyed on a sleeve which rotates freely on shaft *18*. Gear *7* and its carrier *3* are turned with respect to shaft *1* by cam *4*. Sun gear *15* is fixed. Spring *16* holds roll *6* in contact with cam *4*. When shaft *1* rotates about fixed axis *B*, gear *5* rolls around fixed gear *15*, rotating cam *4*, and gear *7* meshes with and rotates internal gear *17* about axis *A*. Due to the action of the cam, gear *17* rotates intermittently with dwells.

2799	CAM-GEAR SPINDLE FEED MECHANISM	CmG SF

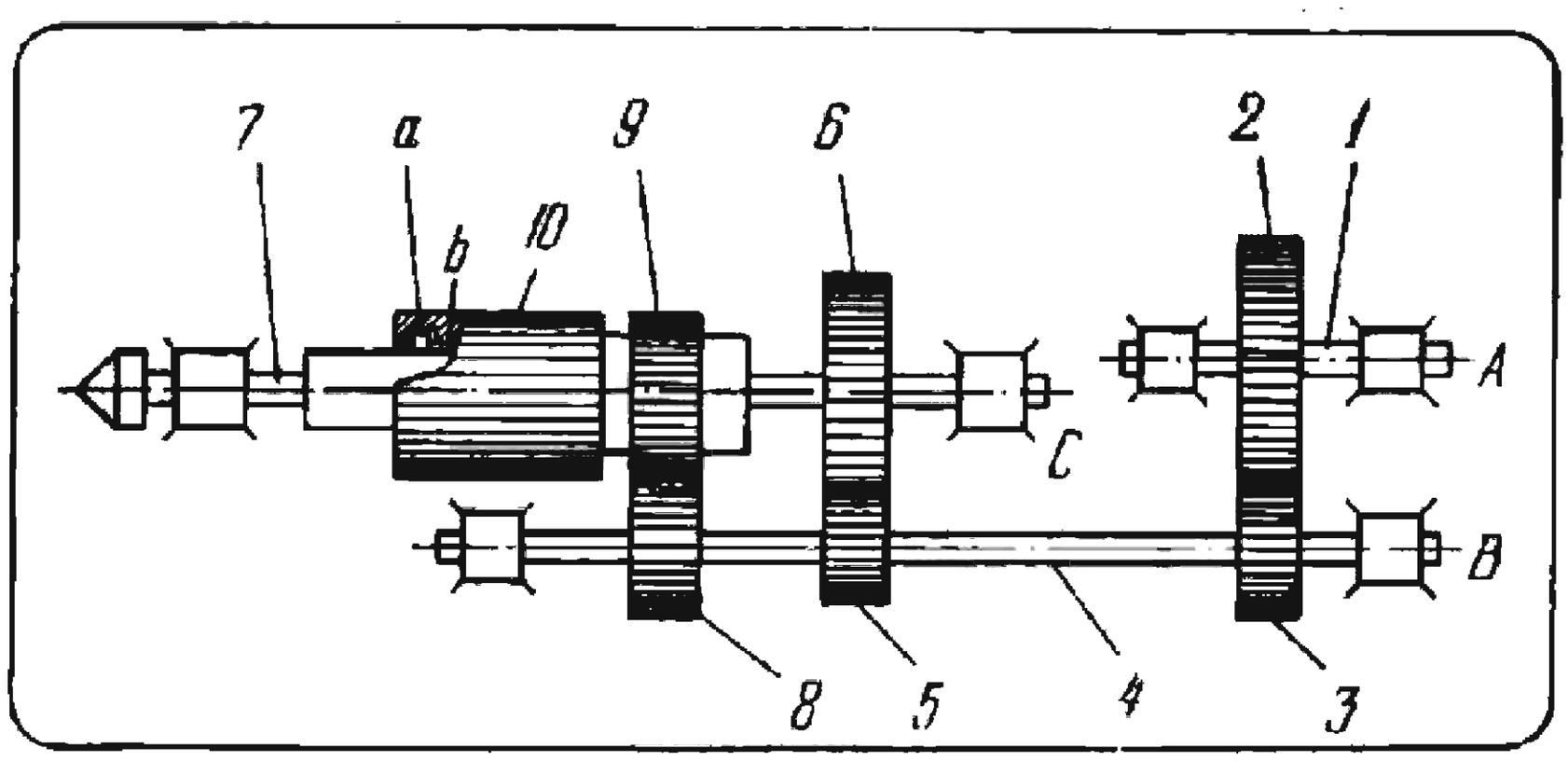

Shaft *1* rotates about fixed axis *A* and its motion is transmitted through meshing gears *2* and *3* to shaft *4* which rotates about fixed axis *B*. Rotation is transmitted further through meshing gears *5* and *6* to spindle *7* which rotates about fixed axis *C*, and through meshing gears *8* and *9*, with a lower transmission ratio, to drum *10*. Owing to the difference in angular velocities, drum *10* turns with respect to spindle *7*. Pin *a*, rigidly attached to spindle *7*, is actuated by curvilinear internal cam slot *b* of drum *10*, so that the spindle is fed axially along axis *C*.

2800	CAM-GEAR FEED MECHANISM	CmG SF

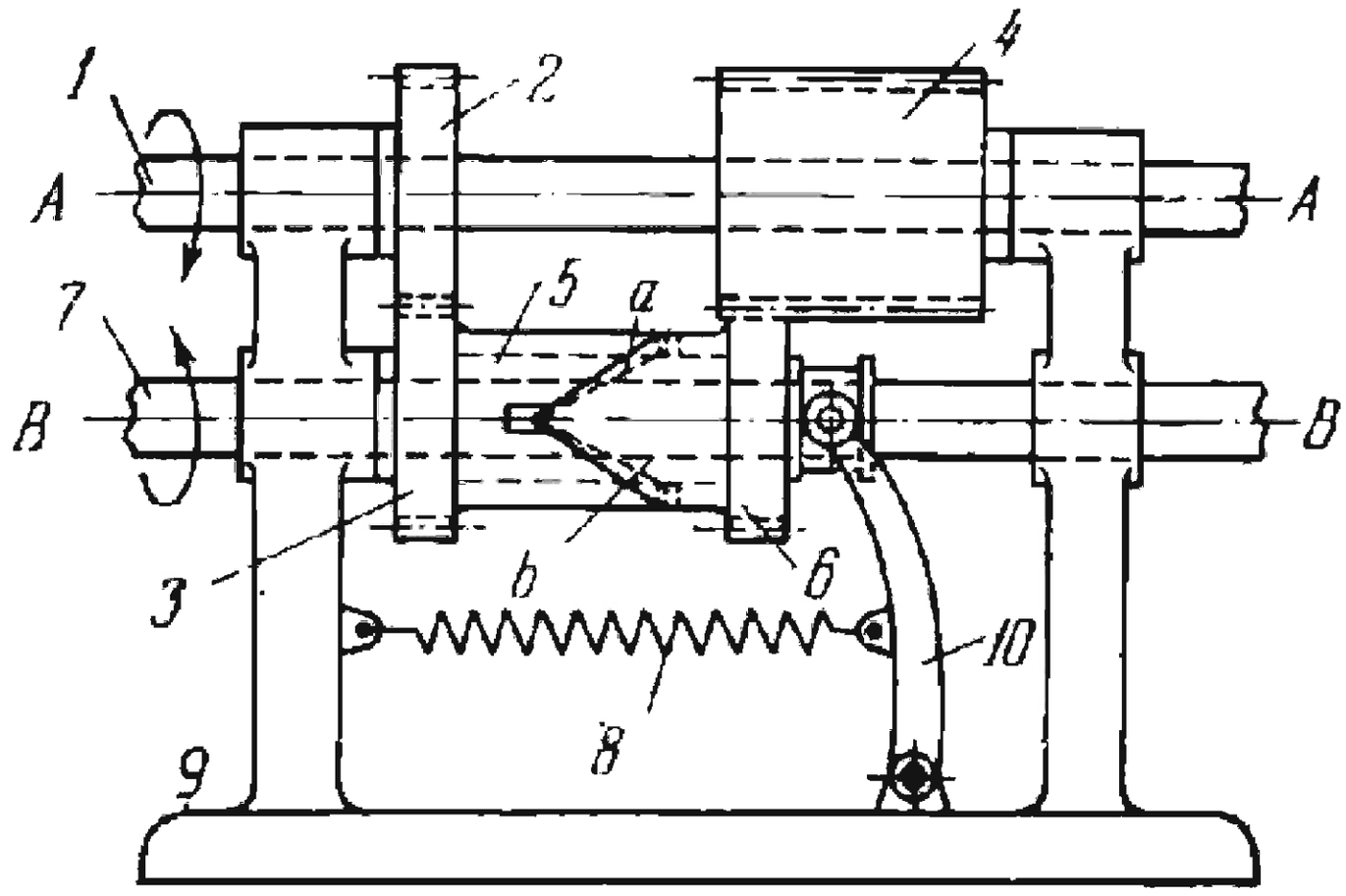

Gears *2* and *4* are keyed to driving shaft *1* which rotates about fixed axis *A-A*. Gears *2* and *4* have different numbers of teeth and mesh with gears *3* and *6*. Gear *3* rotates freely on shaft *7* about fixed axis *B-B* and is integral with clutch-like cam *5* having wedge-shaped recess *a*. Gear *6* is keyed to driven shaft *7* and has wedge-shaped projection *b* which engages recess *a* of cam *5*. Owing to the different speeds of gears *3* and *6*, shaft *7* rotates with a simultaneous axial reciprocating motion in fixed guides of base *9*. Lever *10* and spring *8* hold projection *b* in contact with recess *a* of cam *5*.

2801	CAM-GEAR HEAD FEED MECHANISM	CmG SF

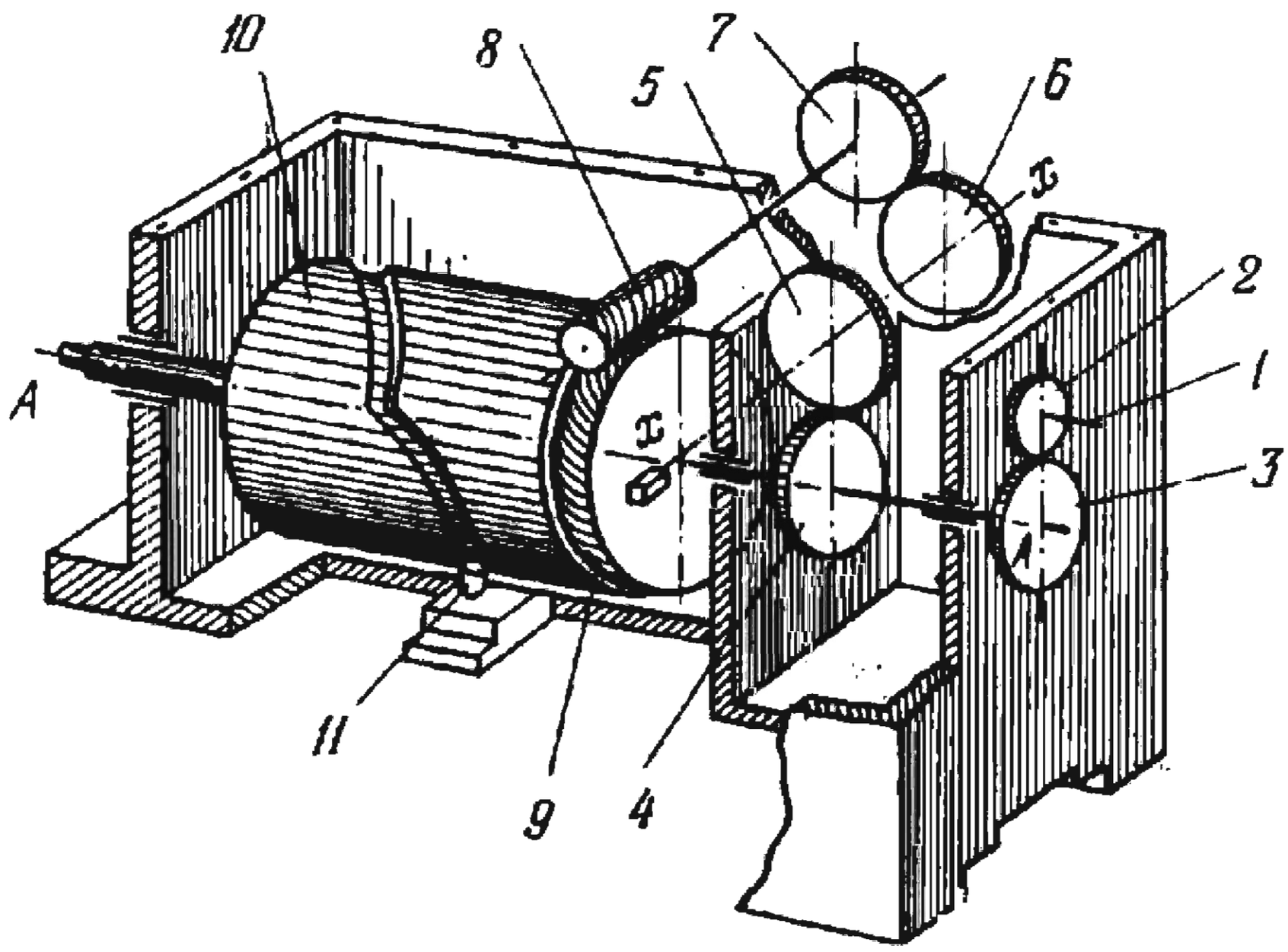

Through spur gears *2* and *3*, crossed helical gears *4* and *5*, change gears *6* and *7*, worm *8* and worm wheel *9*, driving shaft *1* rotates drum *10* about fixed axis *A-A*. The curvilinear cam slot of drum *10* engages fixed pin *11* of the base. As a result, drum *10* and the whole head with the gearing travels along axis *A-A*.

2802	CAM-GEAR MECHANISM OF A CLOCKWORK TACHOMETER	CmG M

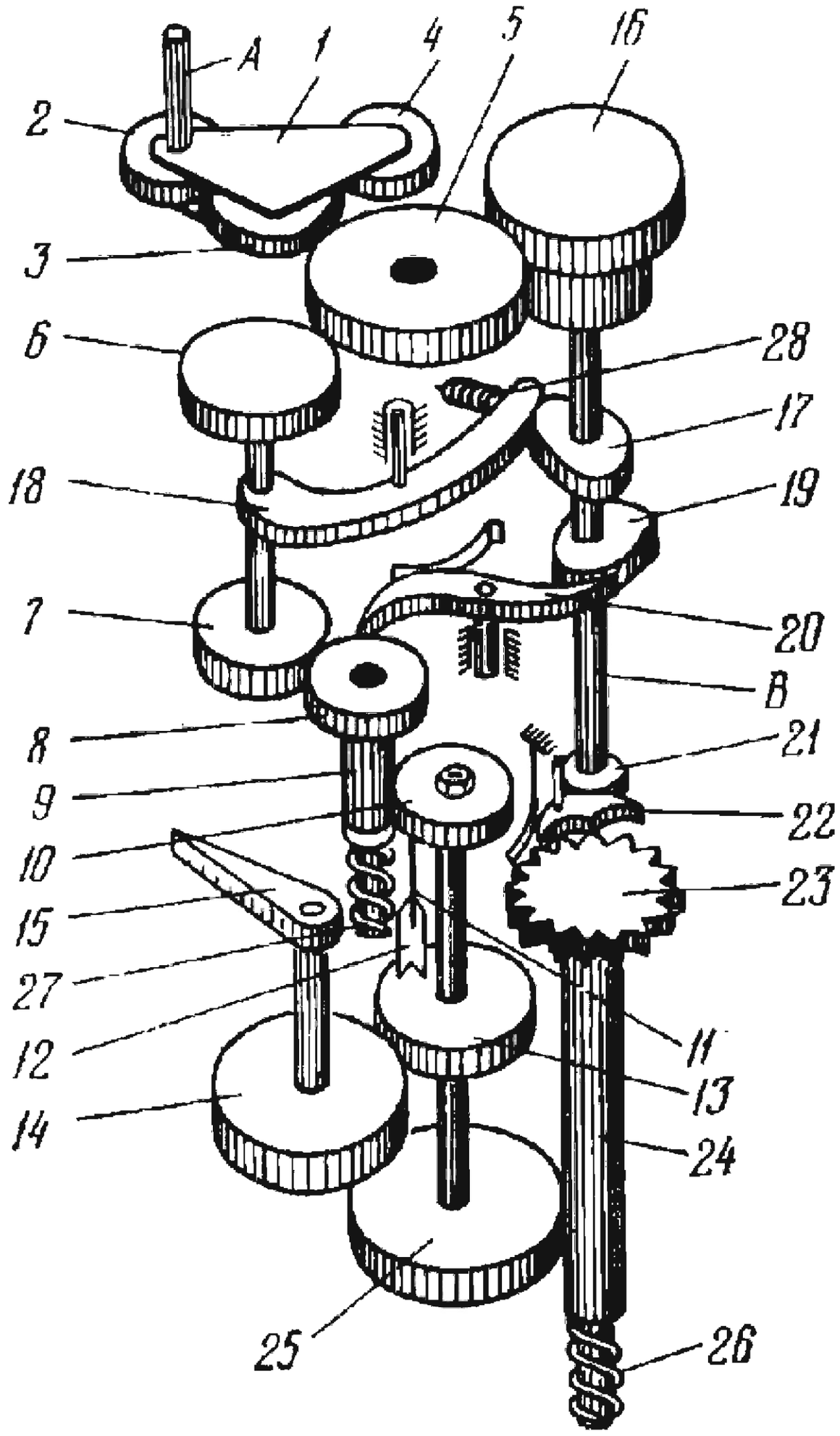

2802	CAM-GEAR MECHANISM OF A CLOCKWORK TACHOMETER	CmG M

Input shaft *A* transmits rotation to gear *5* through unidirectional device *1* always in the same direction (when gear *2* rotates counterclockwise, gear *3* meshes with gear *5*, and when gear *2* rotates clockwise gear *4* meshes with gear *5*). Gear *5* simultaneously drives gear *16* of the clockwork and gear *6* of the transmission mechanism. While gear *5* rotates, the clockwork spring is being continuously wound up. The clockwork is adjusted so that camshaft *B*, together with its mounted cams *17*, *19* and *21*, makes one revolution per second. During the first half of this period, lever *18* is turned by cam *17* to a position in which gears *7* and *8* are in engagement, and pawl *20*, actuated by cam *19*, is withdrawn from gear *8*. Motion is transmitted to hand *15* through gears *7*, *8*, *9* and *10*, pins *11* and *12*, and gears *13* and *14* (gear *13* rotates freely on its shaft). Hand *15* turns through an angle proportional to the angle of rotation in one-half second of the shaft being tested. Springs *26* and *27* are wound up. During the second half of the period, lever *18* is turned by compressed spring *28* so that it retracts the shaft of gears *6* and *7*, disengaging gear *7* from gear *8*. During this interval of time, hand *15* with gears *14*, *13*, *25* and *24* and ratchet wheel *23* remain stationary since double-ended pawl *22* engages the teeth of ratchet wheel *23*, preventing its rotation. Gears *8*, *9* and *10* with pin *11* are retracted by spring *27* to their initial position. If the angular velocity of the shaft being tested remains unchanged during the next and subsequent periods of operation of the tachometer, then pin *11* of gear *10* approaches pin *12* of gear *13*, and hand *15* is stationary. If the speed of the tested shaft is reduced, then pin *11* does not reach pin *12*, and when pawl *22* is retracted from ratchet wheel *23* (pawl *20* engages the teeth of gear *8* during this interval), hand *15* is turned in the opposite direction by spring *26* until pin *12* runs up against pin *11* of gear *10* (stationary at this time). If the speed of the tested shaft is increased, then pin *11* of gear *10* runs up against pin *12* of gear *13* and turns the pin together with gears *13* and *14* and hand *15*, so that the hand is deviated through a larger angle. Spring *26* is additionally wound by this motion. Thus each new value of the angular velocity of the shaft being tested is indicated by hand *15*.

2803	CAM-GEAR MECHANISM OF A TACHOSCOPE	CmG M

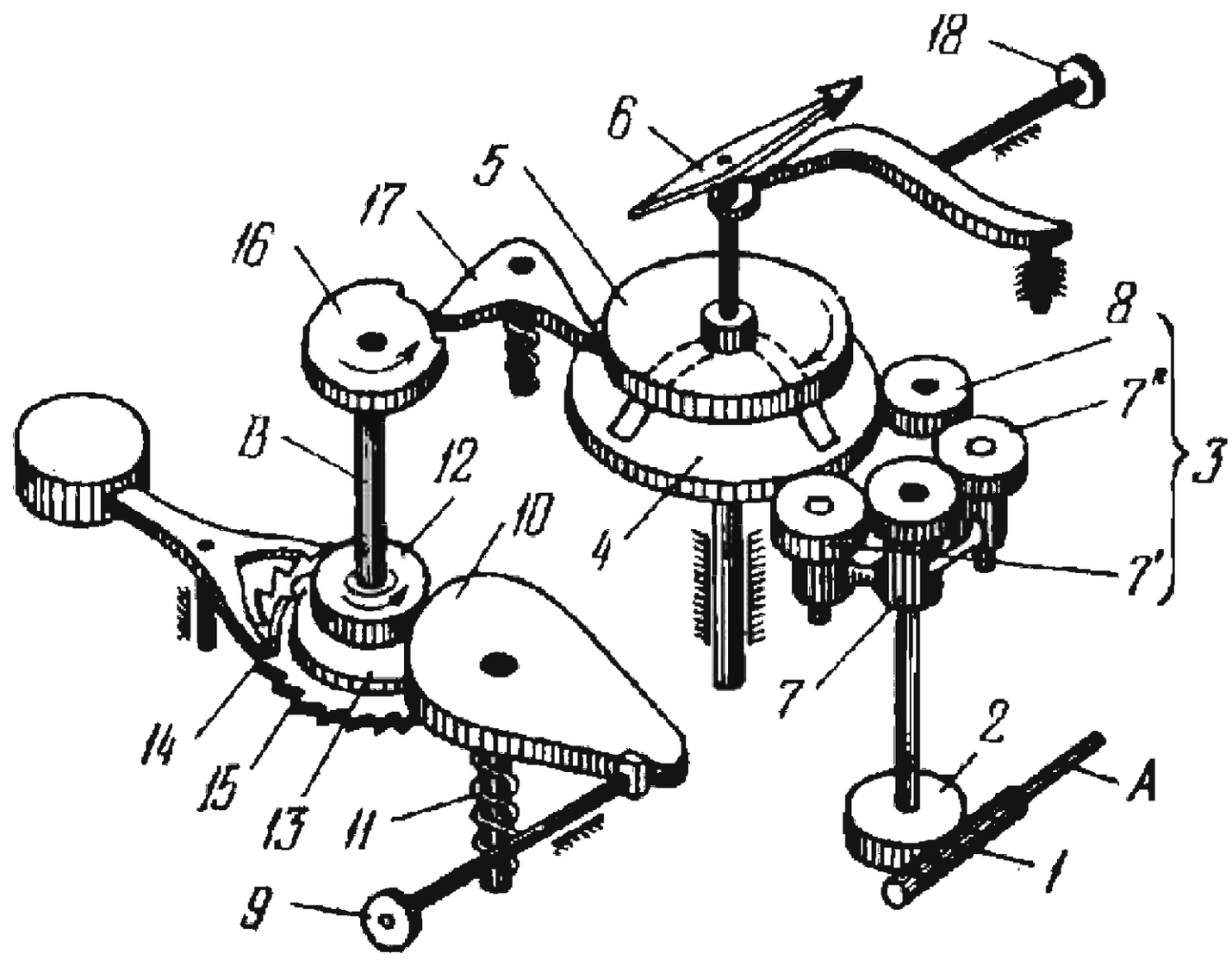

Input shaft *A* is driven by the shaft being tested. By means of worm *1*, worm wheel *2* and unidirectional device *3*, rotation is transmitted to gear *4* always in the same direction. Gear *4* is connected through a frictional drive to ratchet wheel *5* which carries hand *6* mounted on its shaft. The mechanism is designed so that the hand always deviates in the same direction, regardless of the direction of rotation of the shaft being tested. If worm wheel *2* rotates clockwise, quadrant *7* turns clockwise and gear *7'* is brought into mesh with gear *4*, rotating it clockwise. If worm wheel *2* rotates counterclockwise, quadrant *7* is turned counterclockwise and gear *7"* is brought into mesh with gear *8* which, in turn, meshes with gear *4*, rotating it clockwise again (gears *7'* and *7"* rotate freely on studs of quadrant *7*). Hand *6* indicates the angular velocity of the shaft being tested during a definite time interval set up by the clockwork. When button *9* is pressed, gear segment *10* is turned, winding spring *11*. Gear segment *10* rotates gear *12* which is rigidly attached to ratchet-tooth collar *13* and turns freely on shaft *B*. When button *9* is released, spring *11* turns gear segment *10*, gear *12* and ratchet collar *13* in the opposite direction. Then a tooth of ratchet collar *13* is engaged by a pawl on escape wheel *15* which is keyed to shaft *B*. The pallets of anchor *14* engage the teeth of escape wheel *15* so that shaft *B* has a constant angular displacement per unit time. Cam *16* is keyed to shaft *B* and, as the shaft rotates, it retracts pawl *17* from ratchet wheel *5*. Wheel *5* begins to rotate at an angular velocity proportional to the speed of the shaft being tested. After a definite time interval, cam *16* releases pawl *17* which locks wheel *5*. Hand *6* is zeroed by pressing button *18*.

2804	CAM-GEAR MECHANISM OF A COPYING DEVICE FOR TRACING CURVES	CmG Ge

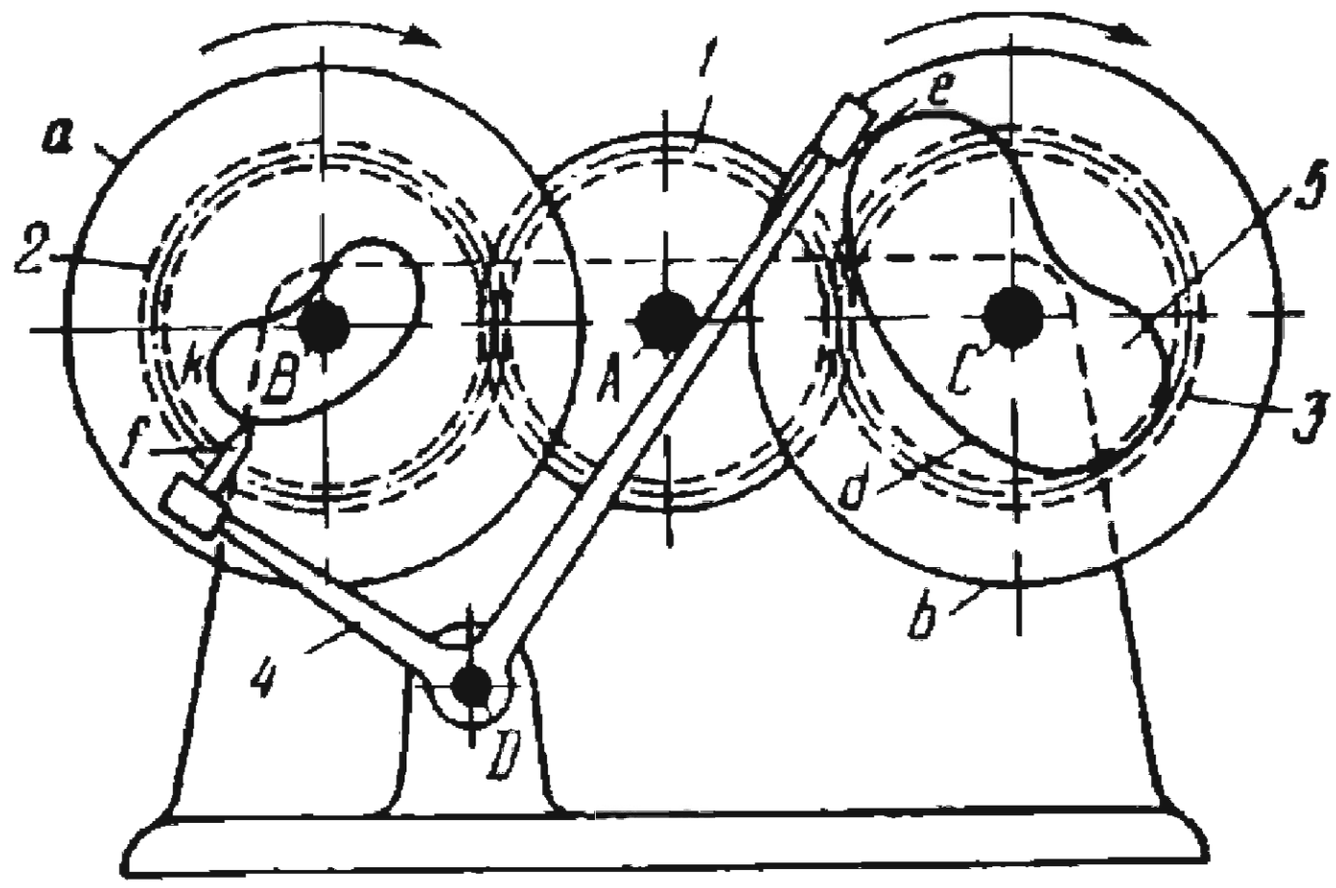

Gear *1* rotates about fixed axis *A* and meshes with two gears, *2* and *3*, of equal diameter, which rotate about fixed axes *B* and *C*. Cam *5*, having the given profile, is mounted on disk *b* which is rigidly attached to gear *3*. Bell-crank lever *4* turns about fixed axis *D* and its contact point *e* slides along cam surface *d* of cam *5*. At this, stylus *f* of lever *4* describes the required curve *k* on the face of disk *a* which is rigidly attached to gear *2*.

2805	CAM-GEAR MECHANISM OF A WASHING MACHINE	CmG FD

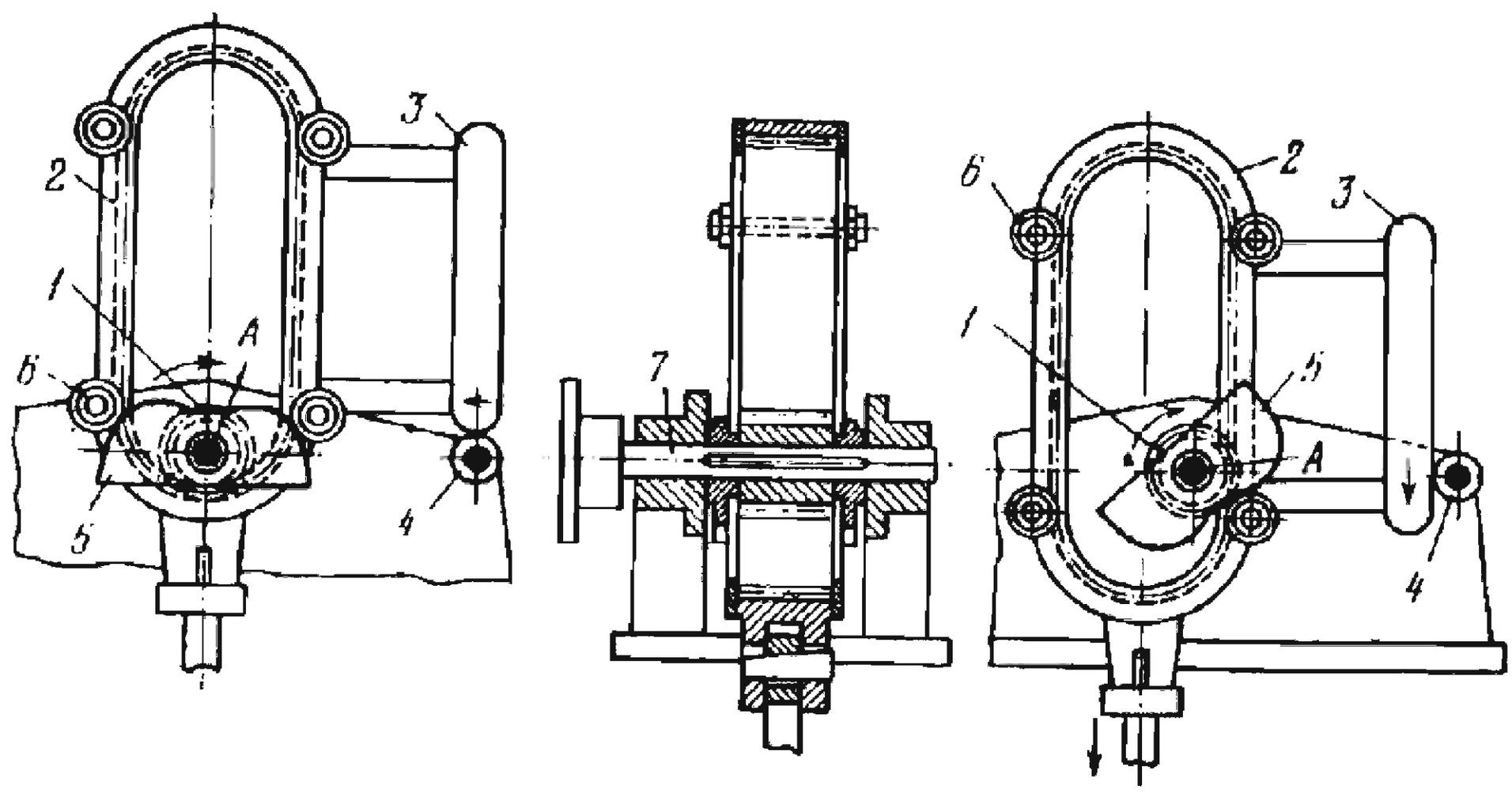

Link 2, designed as an internal double rack, has two vertical straight sections connected at top and bottom by semicircular internal gears. Keyed to driving shaft *7* is pinion *1* which rotates about fixed axis *A* and meshes with internal rack *2*, engaging the vertical sections alternately, so that rack *2* travels up and down. Rack *2* carries four rollers *6* which engage cam *5* at the bottom and top of the stroke. This cam throws over the rack at the end of each stroke, enabling pinion *1* to mesh with the semicircular gears and reversing the direction of travel of the rack. An extension of rack *2* carries guide plate *3* which contacts roller *4* with its outer surface in the downstroke and inner surface in the upstroke. Roller *4* and guide plate *3* keep pinion *1* in mesh with first one and then the other vertical section of rack *2*. The right-hand view shows roller contact with the outer surface; in the left-hand view, roller *4* is passing across the bottom portion of plate *3* and will make contact next with the outer surface.

2806	CAM-GEAR DIFFERENTIAL MECHANISM OF A CONVEYER	CmG FD

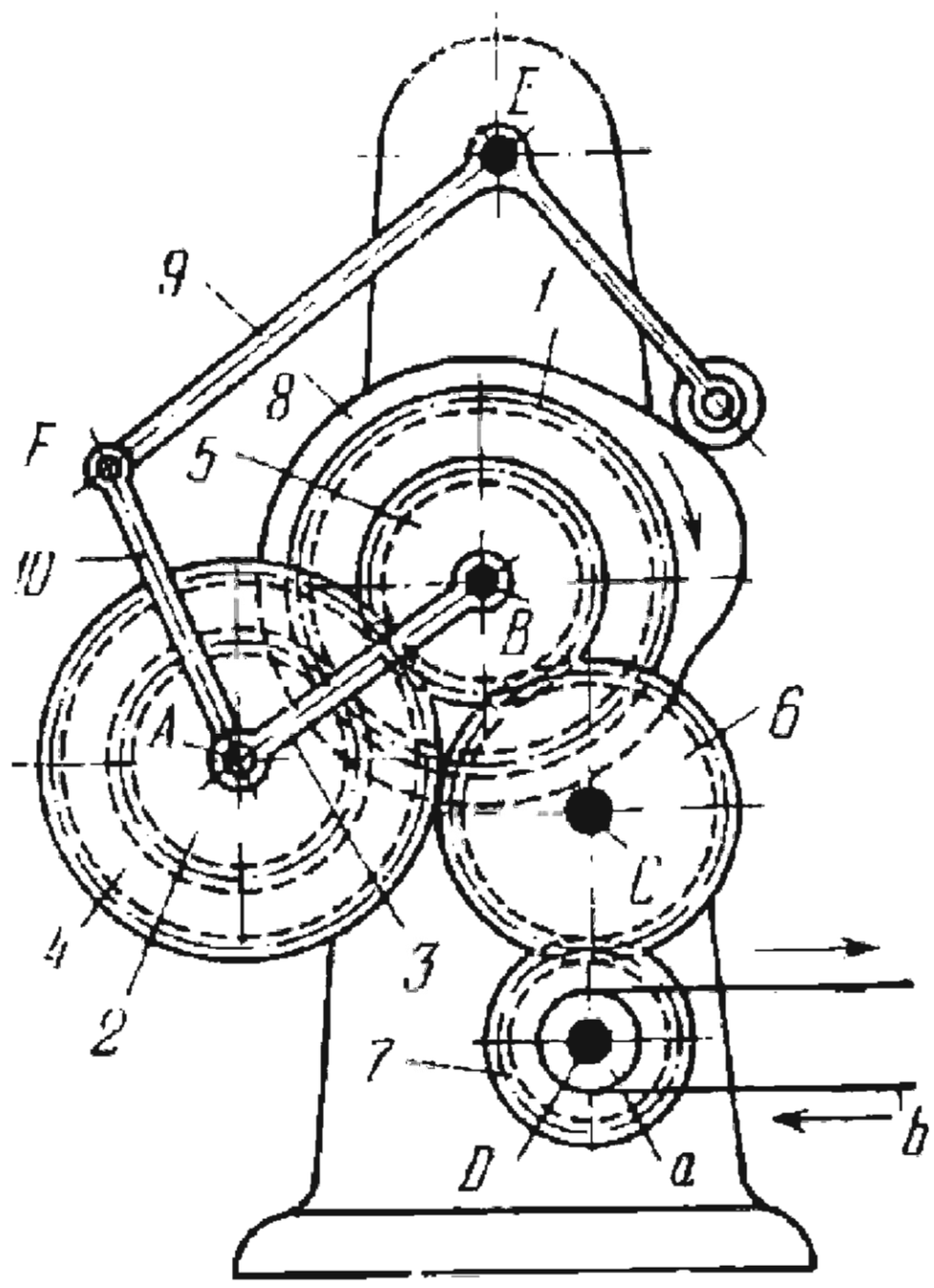

Gear *1* rotates about fixed axis *B* and meshes with planet gear *2* which is rigidly attached to planet gear *4*. Gear *4* meshes with gear *5* which rotates about axis *B*. Carrier *3* rotates about axis *B* and is connected by turning pair *A* to planet gears *2* and *4*. Gear *5* meshes with gear *6* which rotates about fixed axis *C*. Gear *6* meshes with gear *7* which rotates about fixed axis *D* and is rigidly attached to driving drum *a* of belt conveyer *b*. Rigidly attached to gear *1* is cam *8* which engages bell-crank lever *9*. Lever *9* turns about fixed axis *E* and is connected by turning pair *F* to connecting rod *10* which, in turn, is connected by turning pair *A* to carrier *3*. When gear *1* rotates, driving drum *a* of conveyer *b* rotates at variable angular velocity. This variation depends upon the shape of cam *8* and the dimensions of the links of the mechanism.

SECTION EIGHTEEN

Worm-Gear Mechanisms

WG

1. General-Purpose Three-Link Mechanisms 3L (2807 through 2812)
2. General-Purpose Four-Link Mechanisms 4L (2813, 2814 and 2815)
3. General-Purpose Multiple-Link Mechanisms ML (2816 through 2823)
4. Dwell Mechanisms D (2824, 2825 and 2826)
5. Switching, Engaging and Disengaging Mechanisms SE (2827 and 2828)
6. Speed-Change and Reducing Gear Mechanisms SR (2829)
7. Mechanisms for Mathematical Operations MO (2830, 2831 and 2832)
8. Mechanisms of Measuring and Testing Devices M (2833, 2834 and 2835)
9. Mechanisms of Other Functional Devices FD (2836 through 2842)

2807	THREE-LINK WORM GEARING	WG 3L

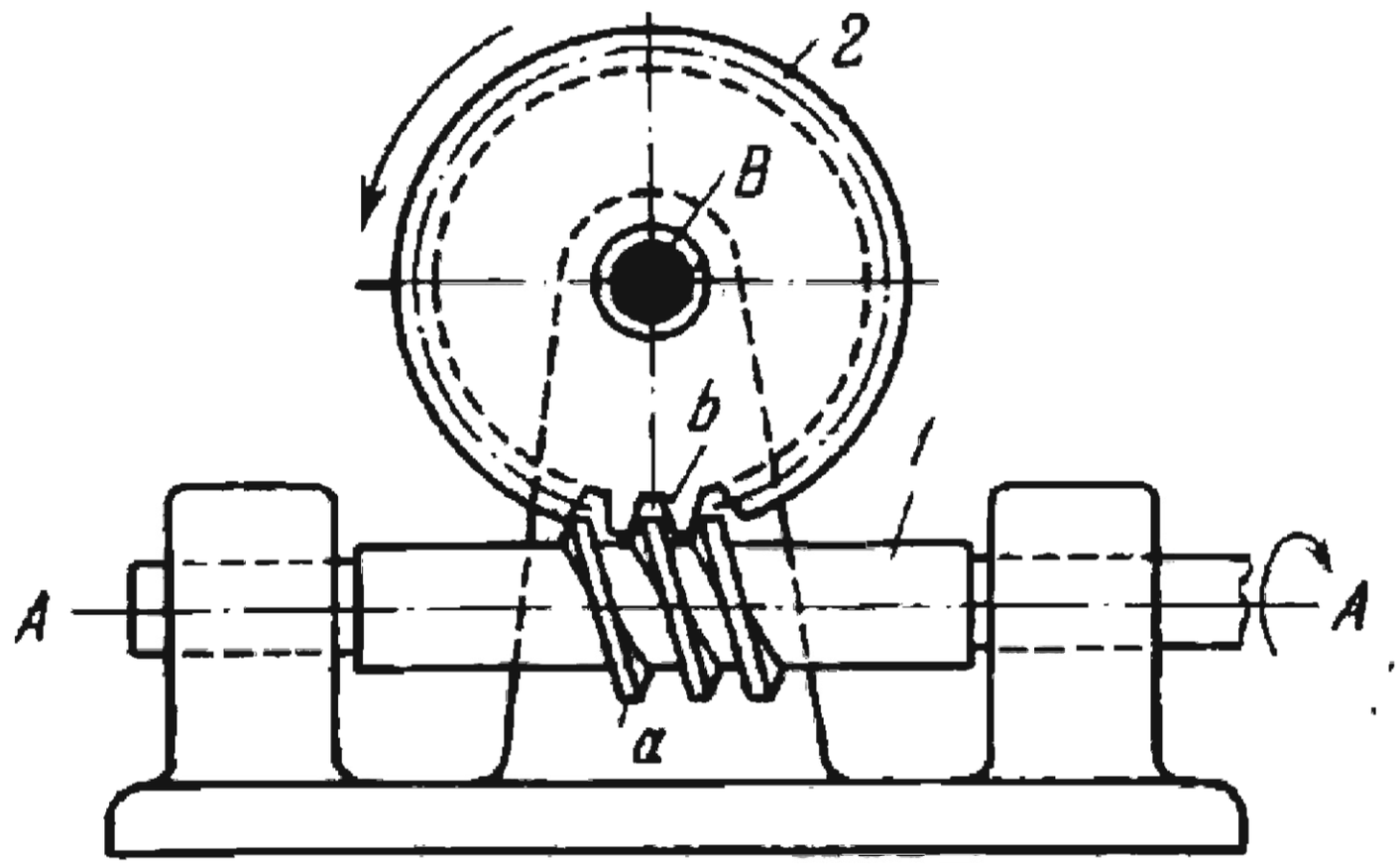

Worm *1* rotates about fixed axis *A-A* and its threads *a* mesh with teeth *b* of worm wheel *2* which rotates about fixed axis *B*. Axes *A-A* and *B* are perpendicular to each other and do not intersect. The transmission ratio of the mechanism is

$$i_{12}=\frac{\omega_1}{\omega_2}=\frac{z_2}{z_1}=\frac{R_2}{R_1}\,\frac{1}{\tan\beta}$$

where ω_1 and ω_2 are the angular velocities of worm *1* and worm wheel *2*, z_1 is the number of threads, or starts, on worm *1*, z_2 is the number of teeth on worm wheel *2*, R_1 and R_2 are the pitch radii of worm *1* and wheel *2*, and β is the lead angle of the worm threads. The tangent of the lead angle is

$$\tan\beta=\frac{z_1 t}{2\pi R_1}=\frac{mz_1}{2R_1}$$

where t is the axial pitch of the worm (and circular pitch of the wheel) and m is the module of the gearing. Radii R_1 and R_2 are determined by the equations:

$$R_1=\frac{mz_1}{2\tan\beta}\quad\text{and}\quad R_2=\frac{mz_2}{2}.$$

2808	THREE-LINK HOURGLASS WORM GEARING	WG 3L

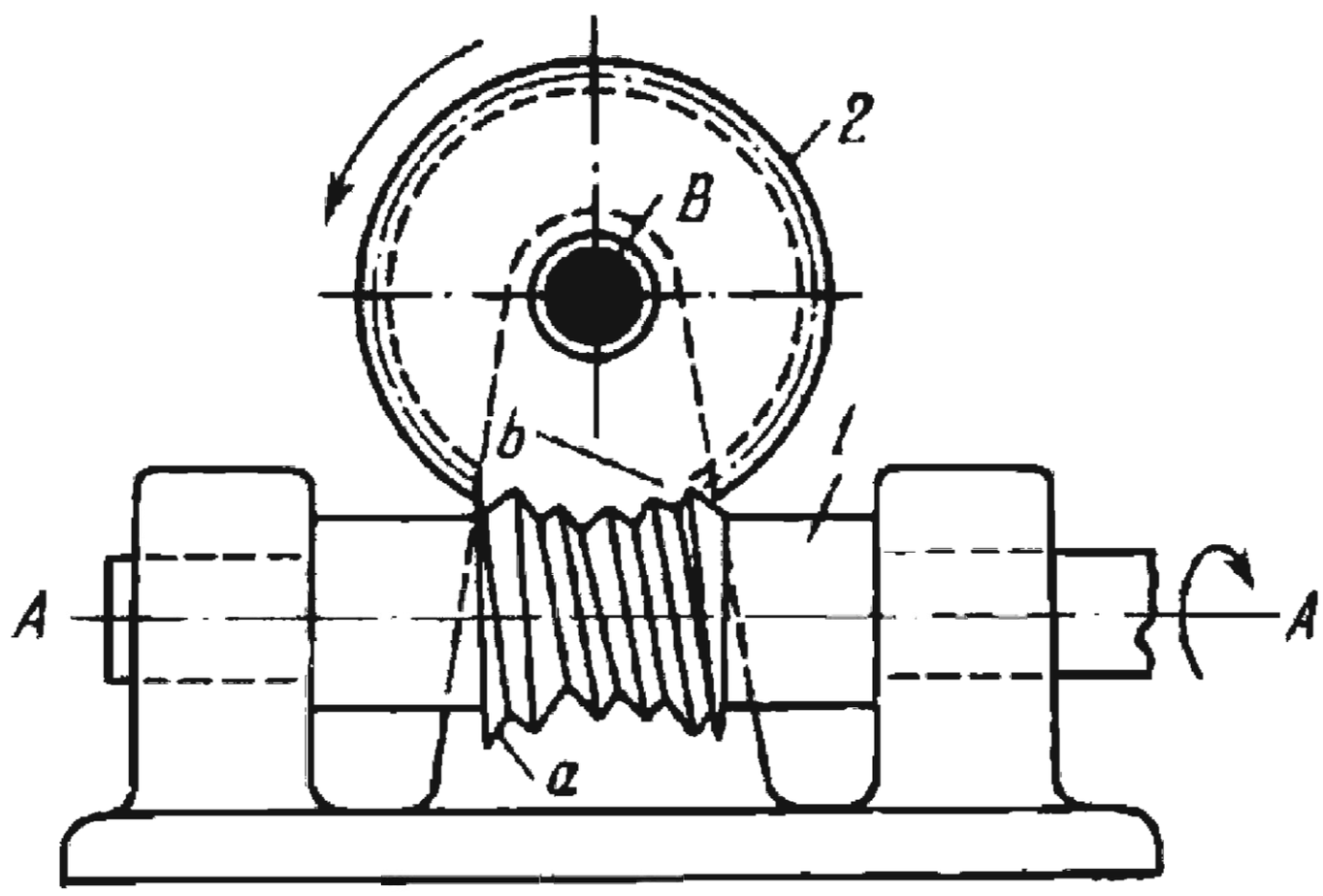

Worm *1* rotates about fixed axis *A-A* and its threads *a* mesh with teeth *b* of worm wheel *2* which rotates about fixed axis *B*. The pitch surface of the worm is globoid, i.e. it is generated by the rotation of a circular arc whose radius equals the pitch radius of worm wheel *2* in a plane perpendicular to axis *B* and passing through axis *A-A*. The arc rotates about axis *A-A*. The transmission ratio of the mechanism is

$$i_{12} = \frac{\omega_1}{\omega_2} = \frac{z_2}{z_1}$$

where ω_1 and ω_2 are the angular velocities of worm *1* and worm wheel *2*, z_1 is the number of threads, or starts, on worm *1* and z_2 is the number of teeth on wheel *2*. The mechanism is employed to transmit high torque and power.

2809	PIN-WHEEL HOURGLASS WORM GEARING	WG 3L

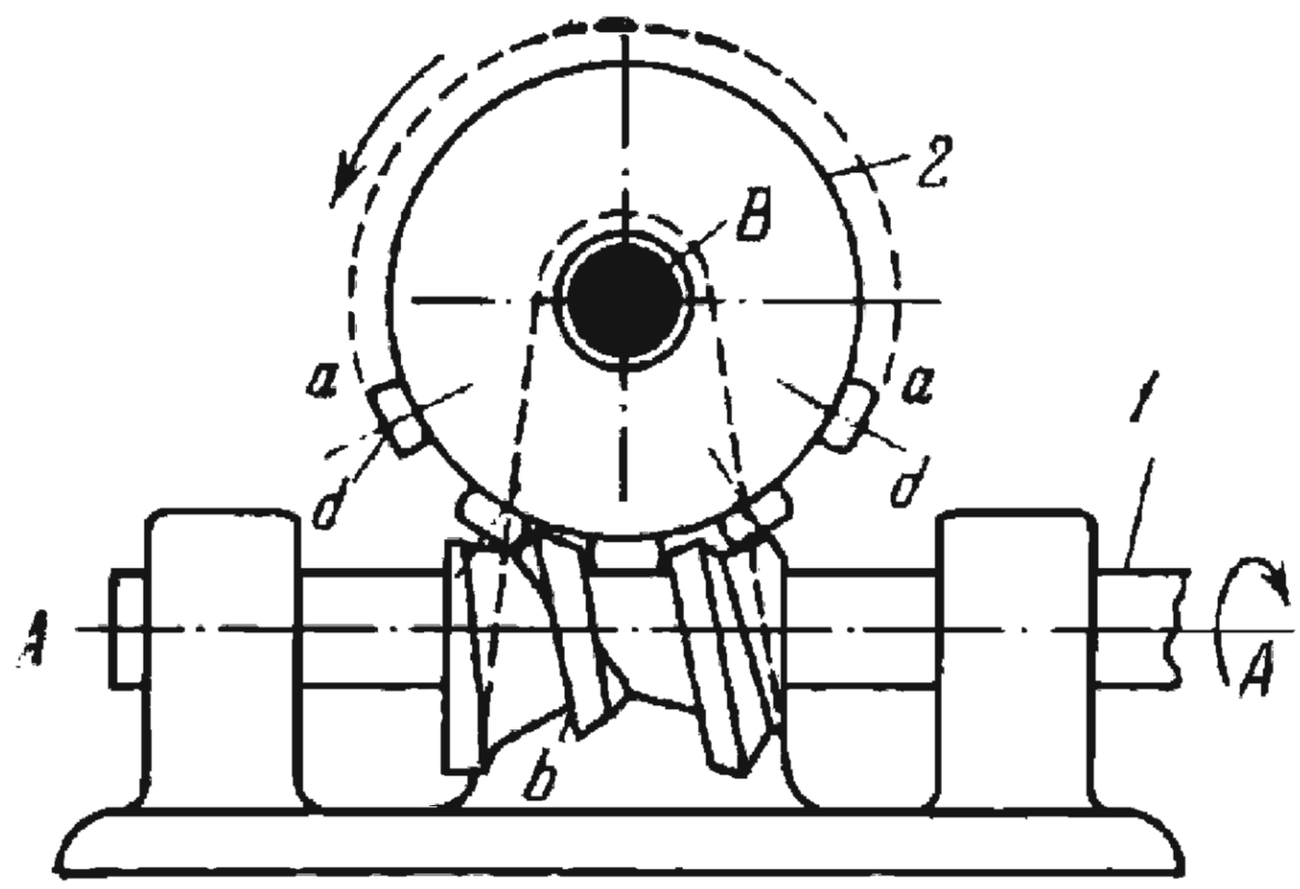

Hourglass worm *1* rotates about fixed axis *A-A* and its threads *b* mesh with cylindrical pins *a* of pin-wheel *2* which rotates about fixed axis *B*. Pins *a* are designed as rollers located on the outside cylindrical surface of wheel *2* and can turn about their axes *d*, thereby substantially reducing friction losses in the gearing. The transmission ratio of the mechanism is

$$i_{12}=\frac{\omega_1}{\omega_2}=\frac{z_2}{z_1}$$

where ω_1 and ω_2 are the angular velocities of worm *1* and wheel *2*, z_1 is the number of threads, or starts, of worm *1* and z_2 is the number of pins on wheel *2*.

2810	FACE-TYPE PIN-WHEEL WORM GEARING	WG 3L

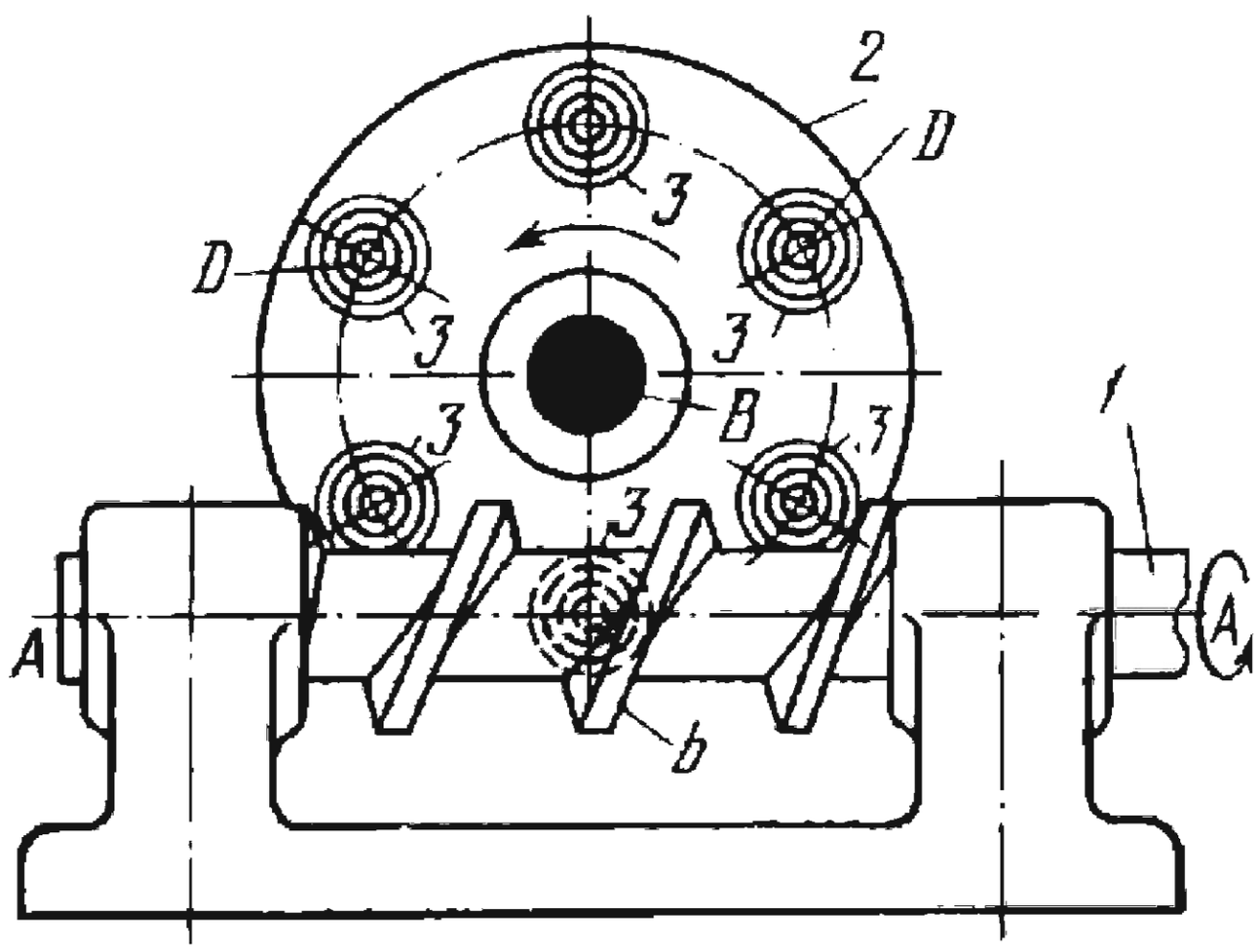

Worm *1* rotates about fixed axis *A-A* and its threads *b* mesh with cylindrical pins *3* of pin-wheel *2* which rotates about fixed axis *B*. Pins *3* are designed as rollers located on the end face of wheel *2* and can turn about their axes *D*, thereby substantially reducing friction losses in the gearing. The transmission ratio of the mechanism is

$$i_{12}=\frac{\omega_1}{\omega_2}=\frac{z_2}{z_1}$$

where ω_1 and ω_2 are the angular velocities of worm *1* and wheel *2*, z_1 is the number of threads, or starts, on worm *1* and z_2 is the number of pins on wheel *2*.

2811	THREE-SPEED WORM GEARING	WG 3L

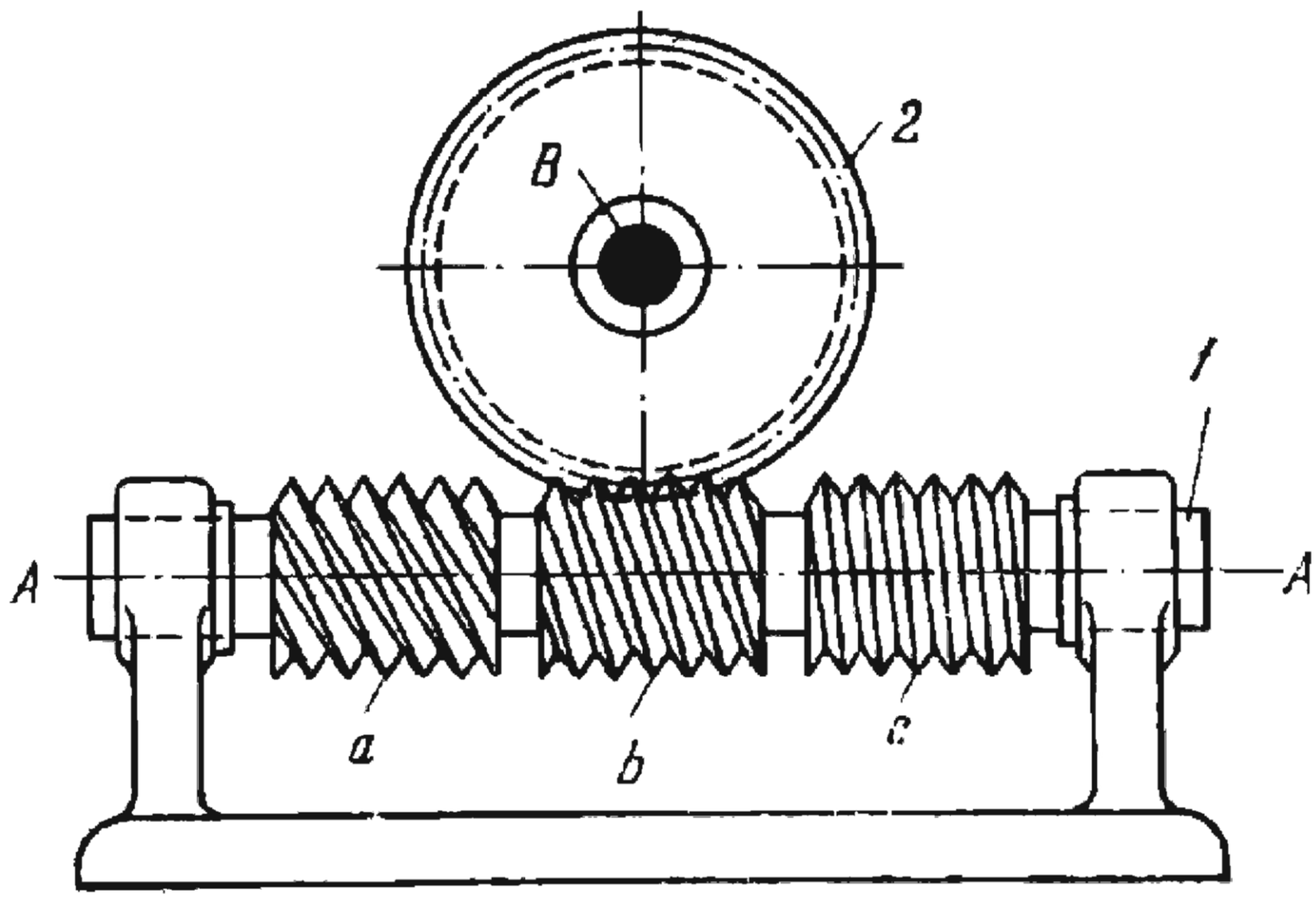

Worm *1* rotates about fixed axis *A-A* and has three sections, *a*, *b* and *c*, with different numbers of threads (starts) and, consequently, different lead angles. Interchangeable worm wheel *2* rotates about fixed axis *B*. The mechanism can have three different transmission ratios depending on which section, *a*, *b* or *c*, of worm *1* meshes with wheel *2*.

2812	WORM GEARING WITH A DRIVING WORM WHEEL	WG 3L

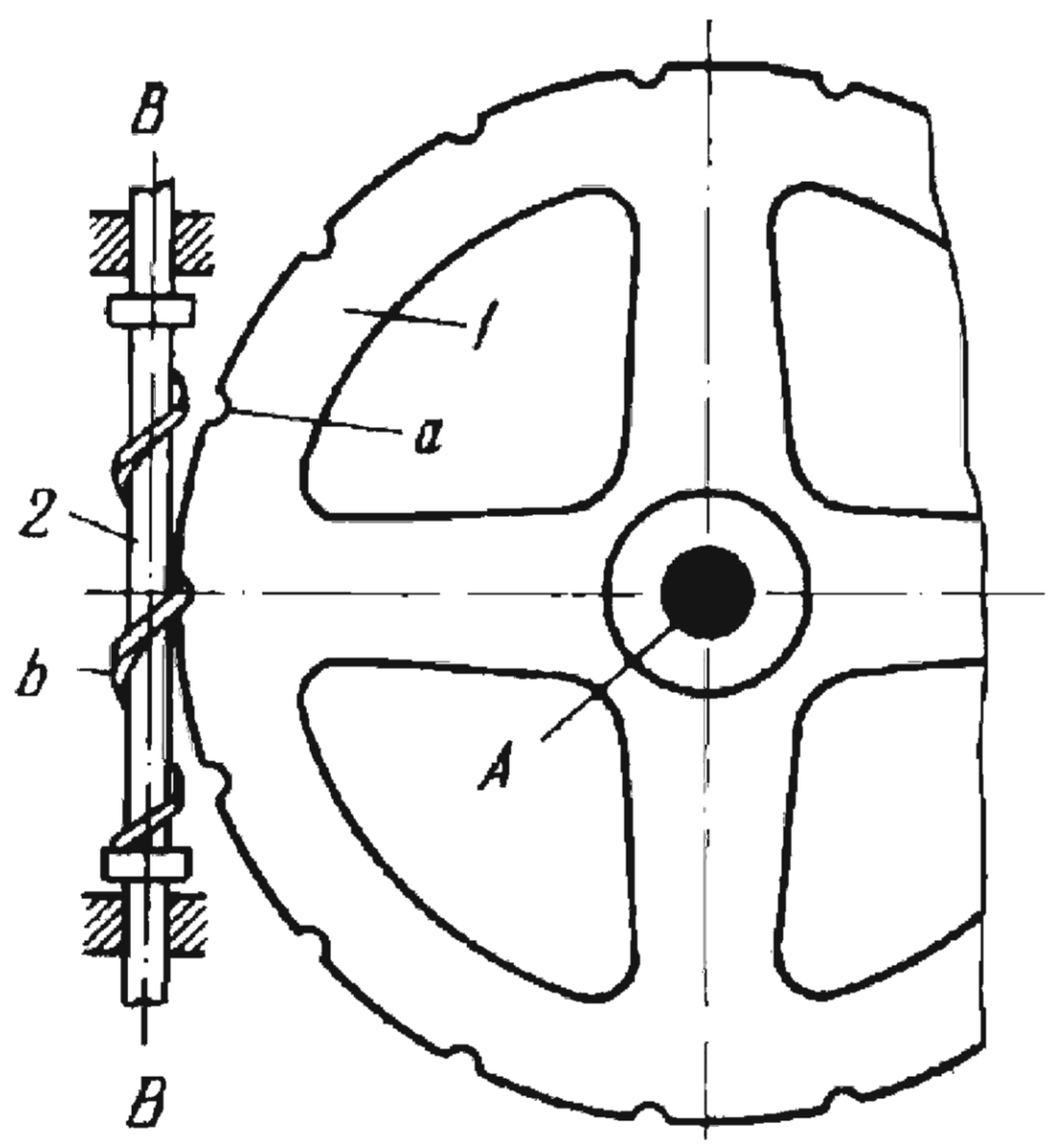

Worm wheel *1* rotates about fixed axis *A* and has helical tooth spaces *a* which mesh with helical thread *b* of worm *2*. Worm *2* rotates about fixed axis *B-B*. Transmission of rotation from the wheel to the worm is possible only if the thread of worm *2* has a sufficiently large lead angle.

2813	DOUBLE-CROWN-GEAR WORM GEARING	WG 4L

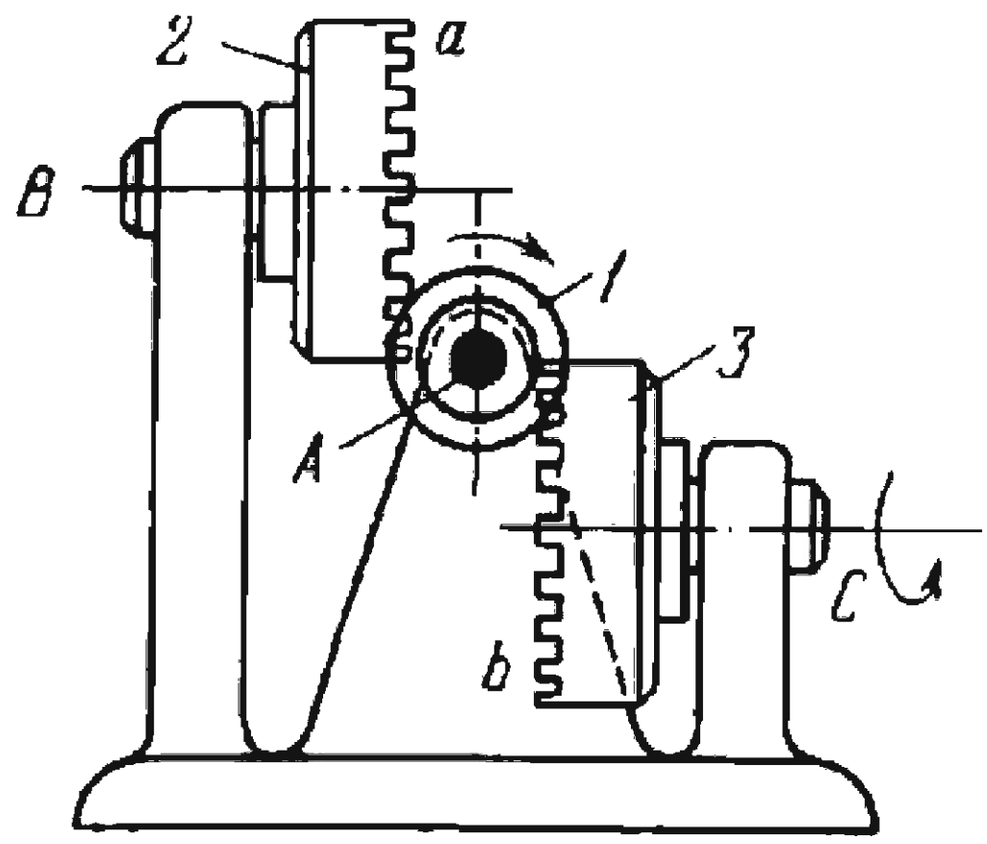

Worm *1* rotates about fixed axis *A* and its threads mesh with teeth *a* and *b* of gears *2* and *3* which rotate about fixed axes *B* and *C*. Teeth *a* and *b* are located on the end faces of gears *2* and *3*, forming crown gears. Axes *B* and *C* are parallel to each other and are perpendicular to, but do not intersect, axis *A*. The transmission ratios of the mechanism are

$$i_{12}=\frac{\omega_1}{\omega_2}=\frac{z_2}{z_1} \quad \text{and} \quad i_{13}=\frac{\omega_1}{\omega_3}=\frac{z_3}{z_1}$$

where ω_1, ω_2 and ω_3 are the angular velocities of worm *1* and of gears *2* and *3*, z_1 is the number of threads, or starts, on worm *1*, and z_2 and z_3 are the numbers of teeth on gears *2* and *3*. When driving worm *1* rotates, driven gears *2* and *3* rotate in opposite directions.

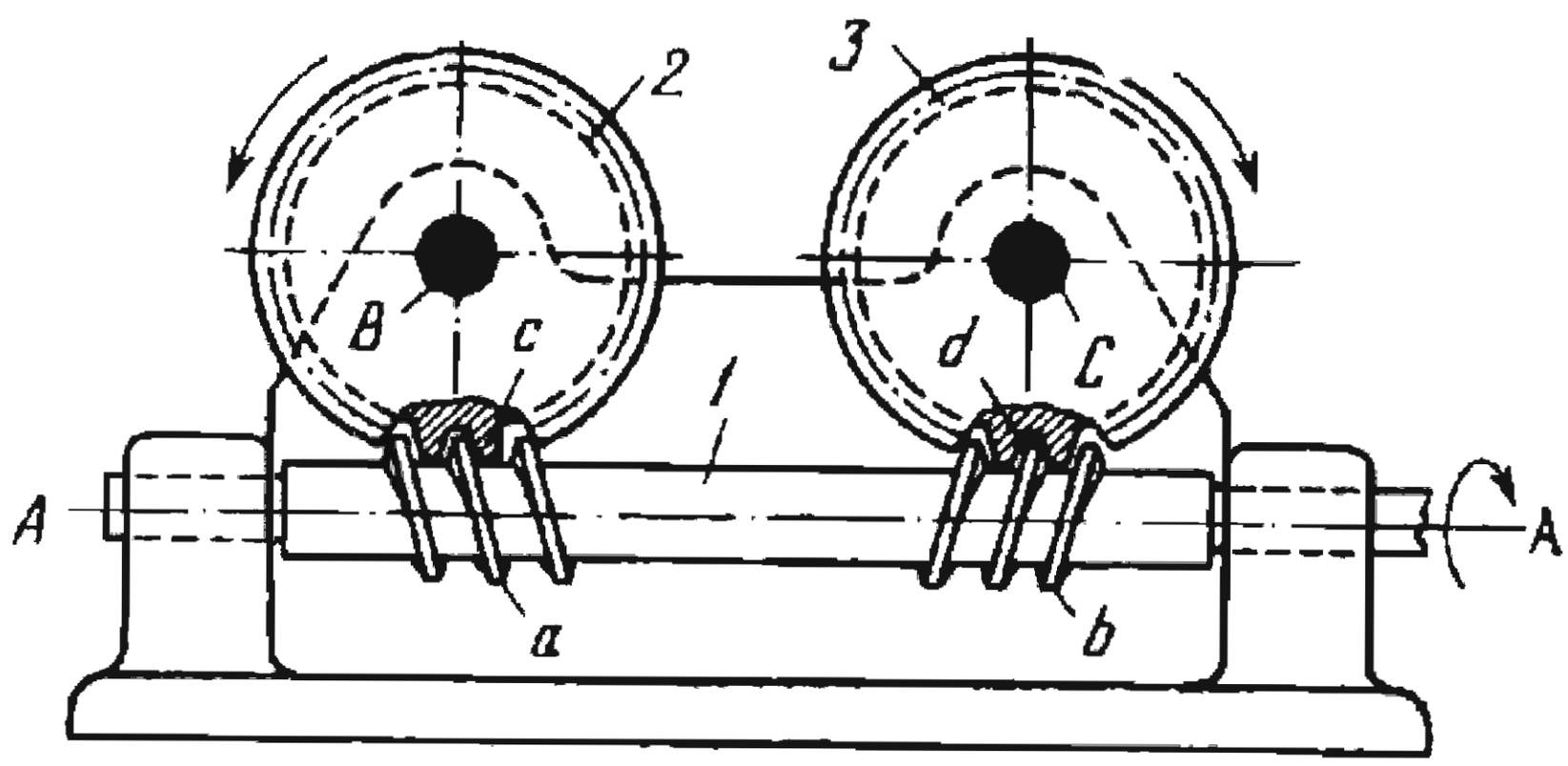

Worm *1* rotates about fixed axis *A-A* and has two sections, *a* and *b*, with threads of opposite hands. Threads *a* and *b* mesh with teeth *c* and *d* of worm wheels *2* and *3* which rotate about fixed axes *B* and *C*. Axes *B* and *C* are parallel to each other and are perpendicular to, but do not intersect, axis *A-A*. The transmission ratios of the mechanism are

$$i_{12}=\frac{\omega_1}{\omega_2}=\frac{z_2}{z_1'} \quad \text{and} \quad i_{13}=\frac{\omega_1}{\omega_3}=\frac{z_3}{z_1''}$$

where ω_1, ω_2 and ω_3 are the angular velocities of worm *1* and of wheels *2* and *3*, z_1' is the number of threads (starts) on worm section *a*, z_1'' is the number of threads (starts) on worm section *b*, and z_2 and z_3 are the numbers of teeth on wheels *2* and *3*. When driving worm *1* rotates, driven wheels *2* and *3* rotate in opposite directions.

2815	DOUBLE FACE-TYPE PIN-WHEEL WORM GEARING	WG 4L

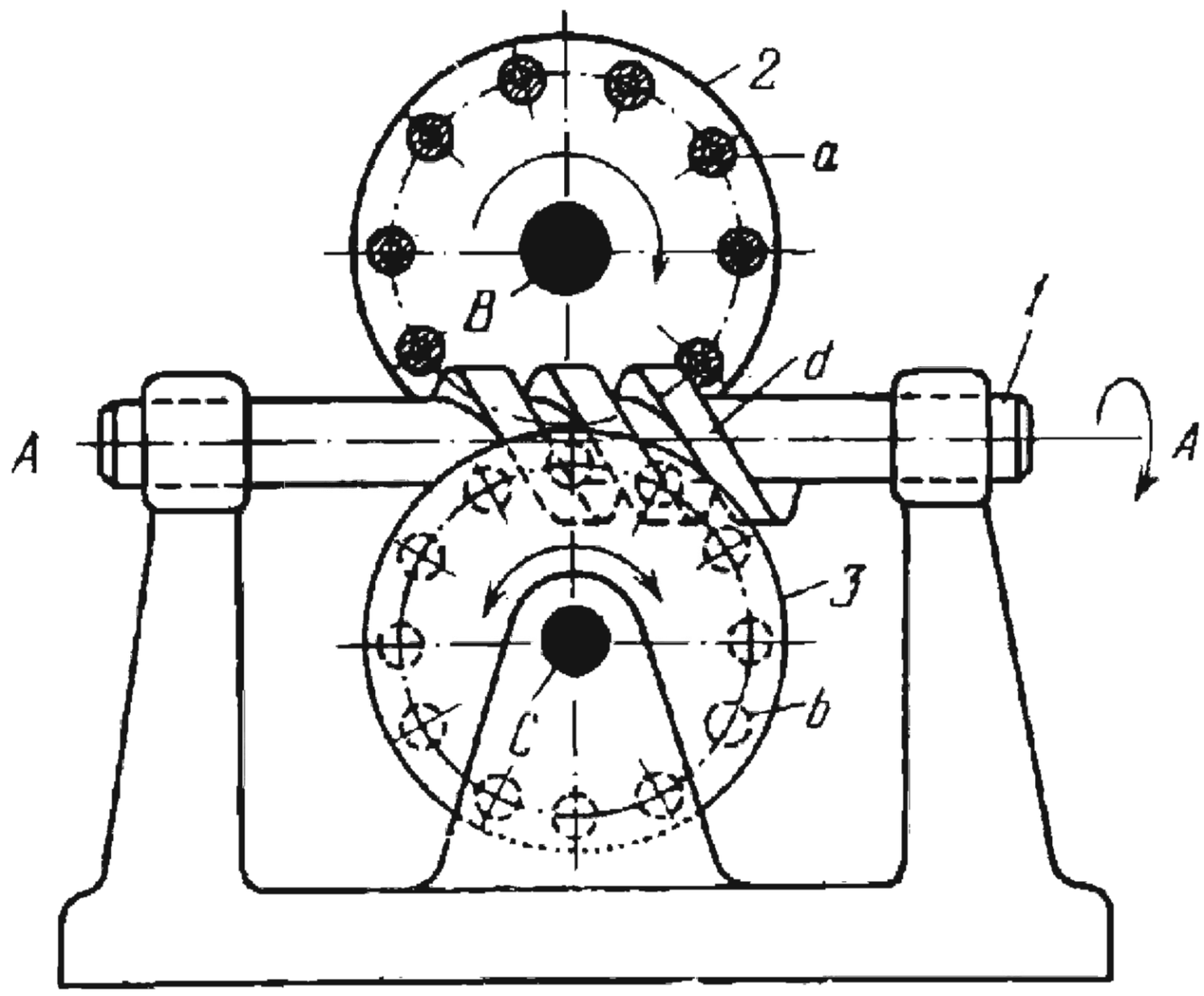

Worm *1* rotates about fixed axis *A-A* and its threads mesh with pins *a* and *b* of pin wheels *2* and *3* which rotate about fixed axes *B* and *C*. Pins *a* and *b* are designed as rollers located on the end faces of wheels *2* and *3*, and can rotate about their axes, thereby substantially reducing friction losses in the gearing. Axes *B* and *C* are parallel to each other and are perpendicular to, but do not intersect, axis *A-A*. The transmission ratios of the mechanism are

$$i_{12}=\frac{\omega_1}{\omega_2}=\frac{z_2}{z_1} \quad \text{and} \quad i_{13}=\frac{\omega_1}{\omega_3}=\frac{z_3}{z_1}$$

where ω_1, ω_2 and ω_3 are the angular velocities of worm *1* and of pin wheels *2* and *3*, z_1 is the number of threads (starts) on worm *1*, and z_2 and z_3 are the numbers of pins *a* and *b* on wheels *2* and *3*. When driving worm *1* rotates, pin wheels *2* and *3* rotate in opposite directions.

2816	GEAR-SCREW MECHANISM WITH A SEGMENT GEAR	WG ML

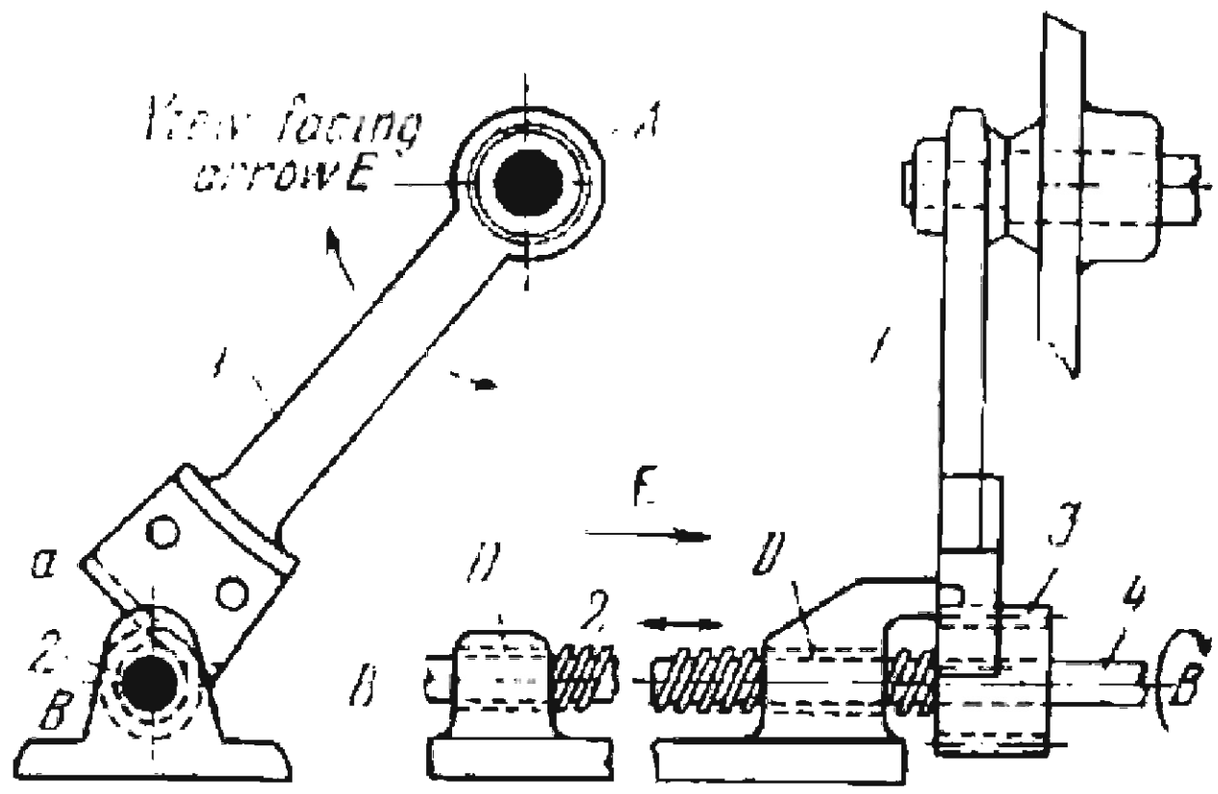

Link *1* turns about fixed axis *A* and has gear segment *a* with helical teeth which mesh with helical teeth of pinion *3*. Pinion *3* is keyed to (or integral with) shaft *4* which rotates about fixed axis *B-B*. Shaft *4* is connected by screw pair *D* to the base. The face width of gear *3* is greater than that of helical gear segment *a*. When driving link *1* oscillates, driven shaft *4*, in addition to its rotation about axis *B-B*, reciprocates along this axis.

2817	TRIPLE-WHEEL WORM GEARING	WG ML

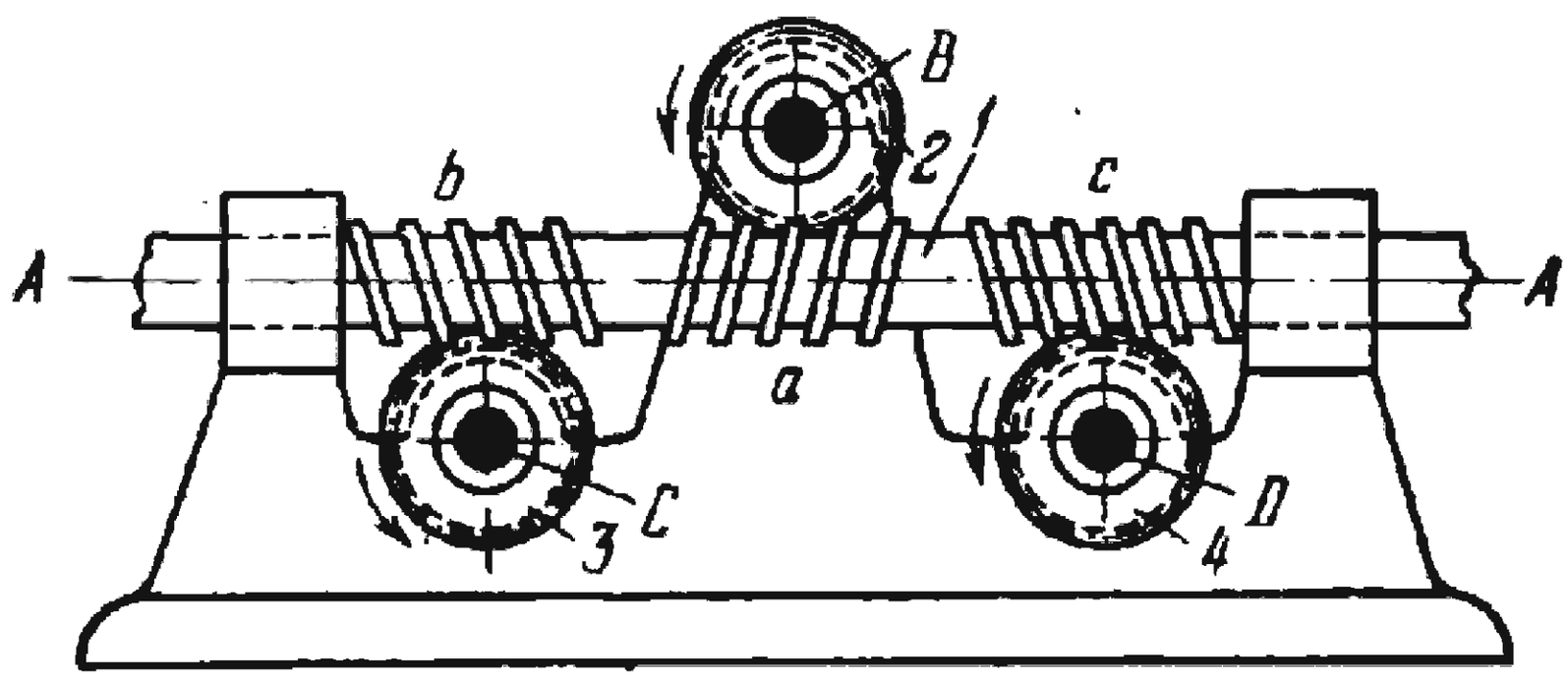

Worm *1* rotates about fixed axis *A-A* and has three sections, *a*, *b* and *c*. Each section has the same number of starts, but section *a* has left-hand threads while sections *b* and *c* have right-hand threads. The worm sections *a*, *b* and *c* mesh with three worm wheels, *2*, *3* and *4*, which rotate about fixed axes *B*, *C* and *D*. When driving worm *1* rotates, worm wheels *2*, *3* and *4* rotate in the same direction.

2818	WORM-LEVER GEARING WITH A SLIDING WORM	WG ML

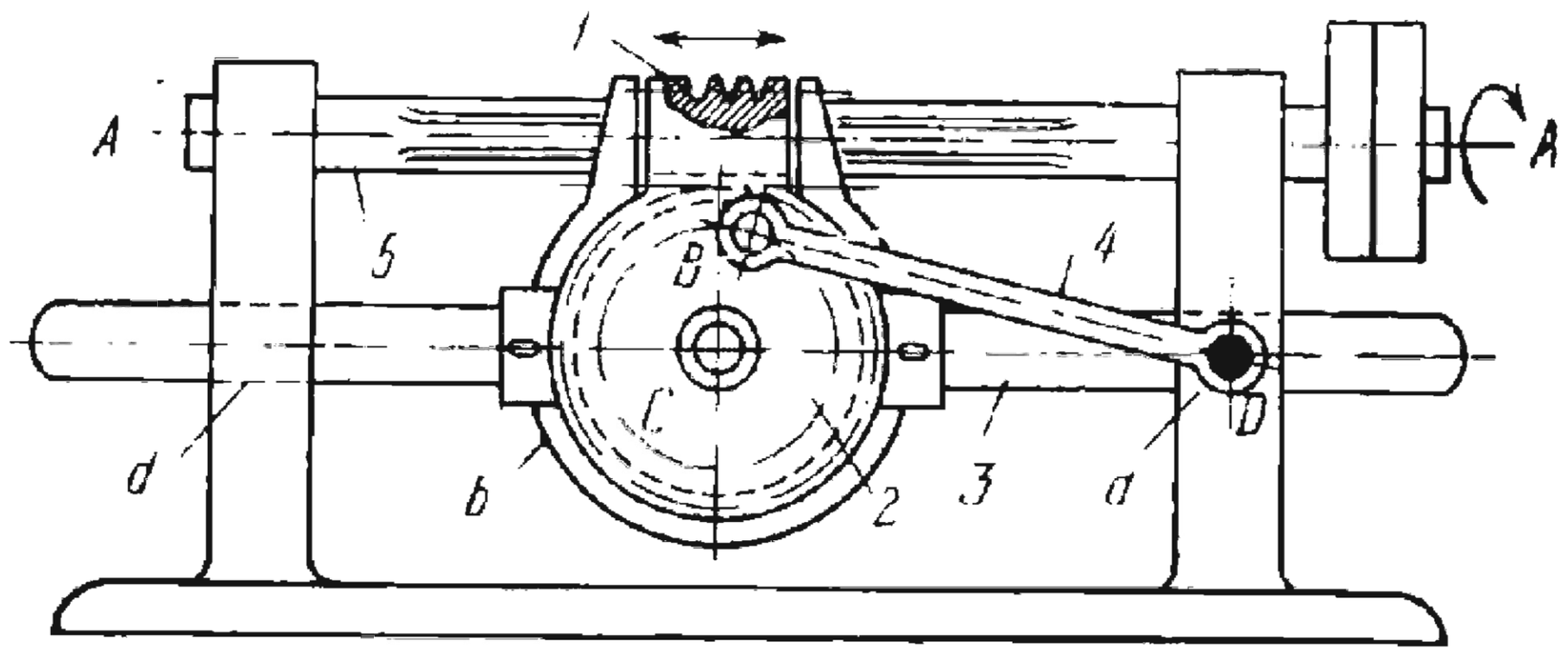

Worm *1* rotates about fixed axis *A-A* of spline shaft *5* and can slide along this axis on the splines. Worm *1* meshes with worm wheel *2* which rotates about axis *C* of housing *b*. Housing *b* is rigidly attached to slide *3* which reciprocates in fixed guides *d-d*. Worm wheel *2* is connected by turning pair *B* to link *4* which turns about fixed axis *D*. When driving shaft *5* rotates, worm *1* transmits reciprocating motion, parallel to axis *A-A*, to driven worm wheel *2* in addition to rotation about axis *C*.

2819	WORM-LEVER GEARING WITH A SLIDING SHAFT	WG ML

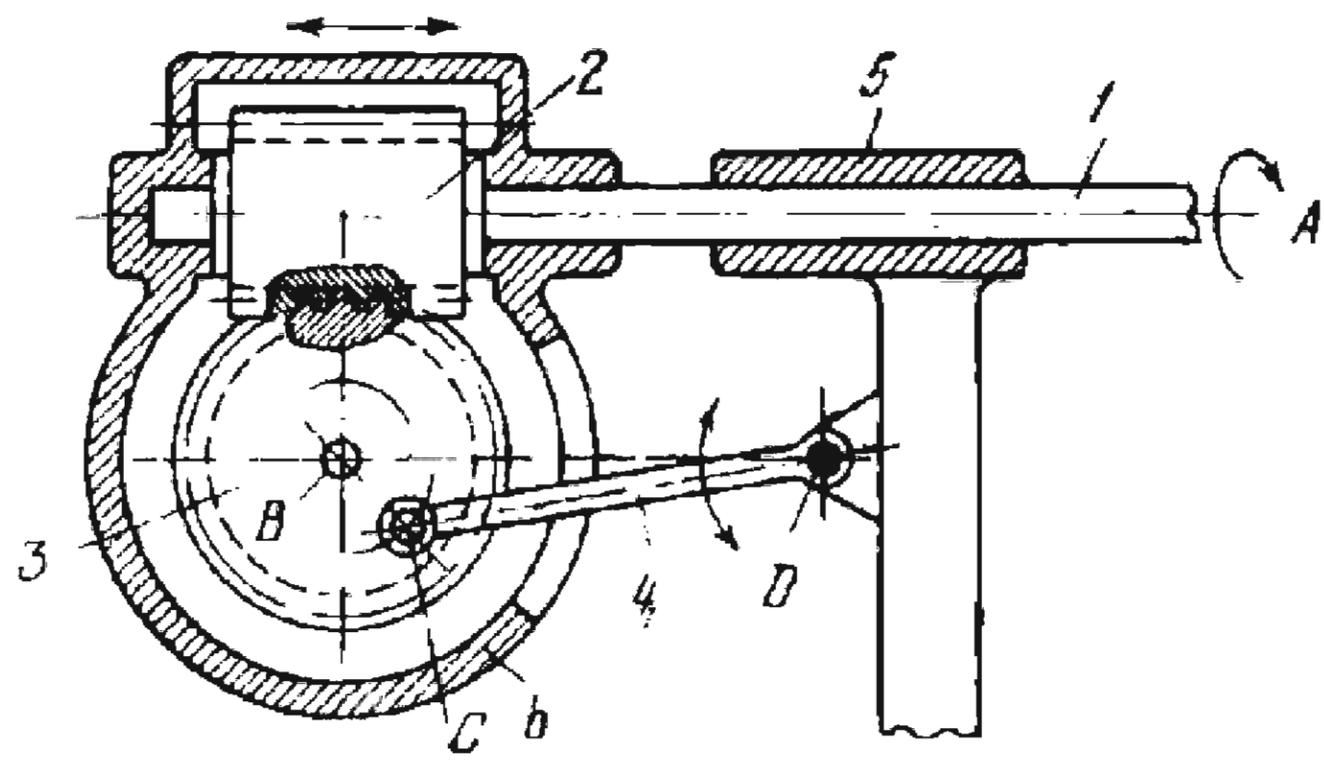

Worm *2* is keyed to shaft *1* and rotates with it about fixed axis *A*. Shaft *1* can slide in fixed guide *5* along axis *A*. Worm *2* meshes with worm wheel *3* which rotates about axis *B* of housing *b*. The housing contains worm *2* and worm wheel *3*. Wheel *3* is connected by turning pair *C* to link *4* which turns about fixed axis *D*. When driving shaft *1* rotates, worm *2* transmits reciprocating motion, parallel to axis *A*, to driven worm wheel *3* in addition to rotation about axis *B*.

2820	WORM-LEVER MECHANISM OF A SWINGING FAN	WG ML

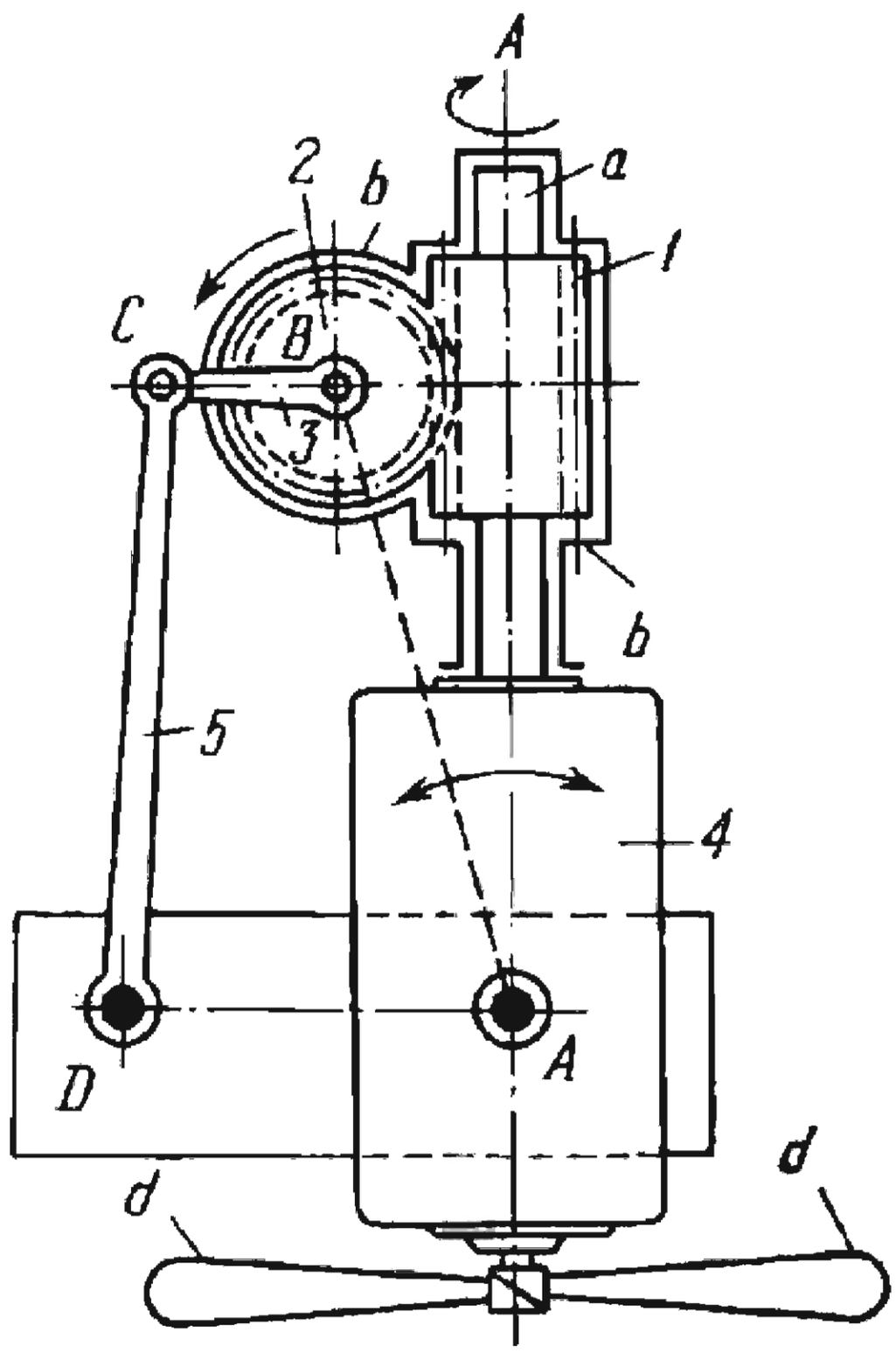

Worm *1* is keyed to shaft *a* of electric motor *4* and rotates about axis *A-A*. Worm *1* meshes with wormw heel *2* which rotates about axis *B* of housing *b*. The housing is rigidly attached o the frame of motor *4*. Crank *3* is rigidly attached to wheel *2* and is connected by turning pair *C* to link *5* which turns about fixed axis *D*. Electric motor *4* and housing *b* turn about fixed axis *A*. When worm *1* is driven through shaft *a* by motor *4*, the motor, vanes *d* and housing *b* oscillate about axis *A*.

2821	WORM GEARING WITH ALTERNATELY DRIVEN WORMS	WG ML

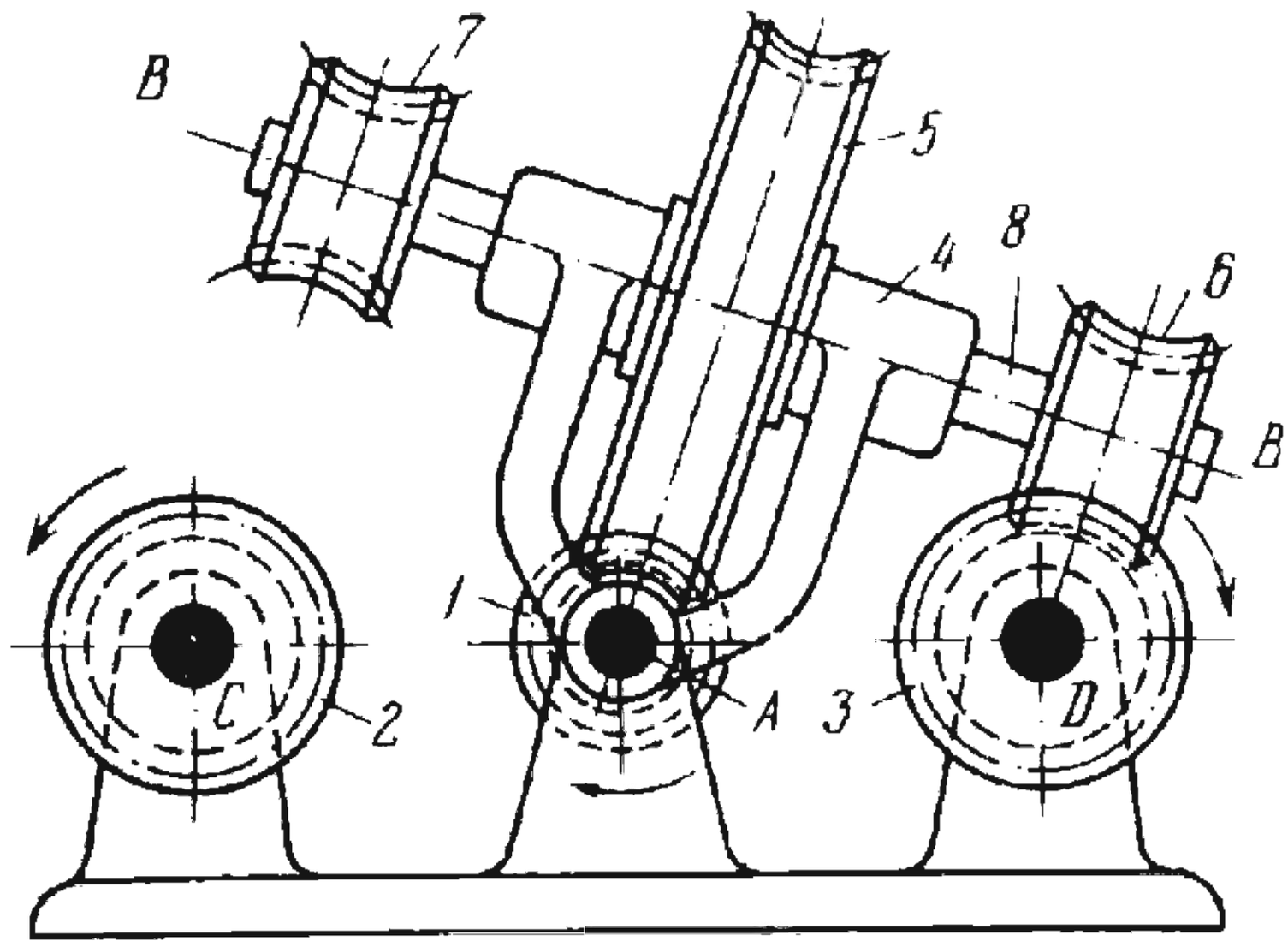

Worm *1* rotates about fixed axis *A* and meshes with worm wheel *5* which rotates about axis *B-B*. Worm wheels *5*, *6* and *7* are keyed to shaft *8* which runs in the bearings of yoke *4*. The yoke turns freely about axis *A*. When yoke *4* is turned, either worm wheel *6* meshes with worm *3*, or wheel *7* meshes with worm *2*. When engaged by their corresponding wheel, worms *2* and *3* rotate about fixed axes *C* and *D*. Rotation can be transmitted from either worm wheel *6* or *7* to worm *3* or *2* only if the worms have sufficiently large lead angles.

2822	WORM-GEAR MECHANISM FOR INTERMITTENT DRIVEN SHAFT ROTATION	WG ML

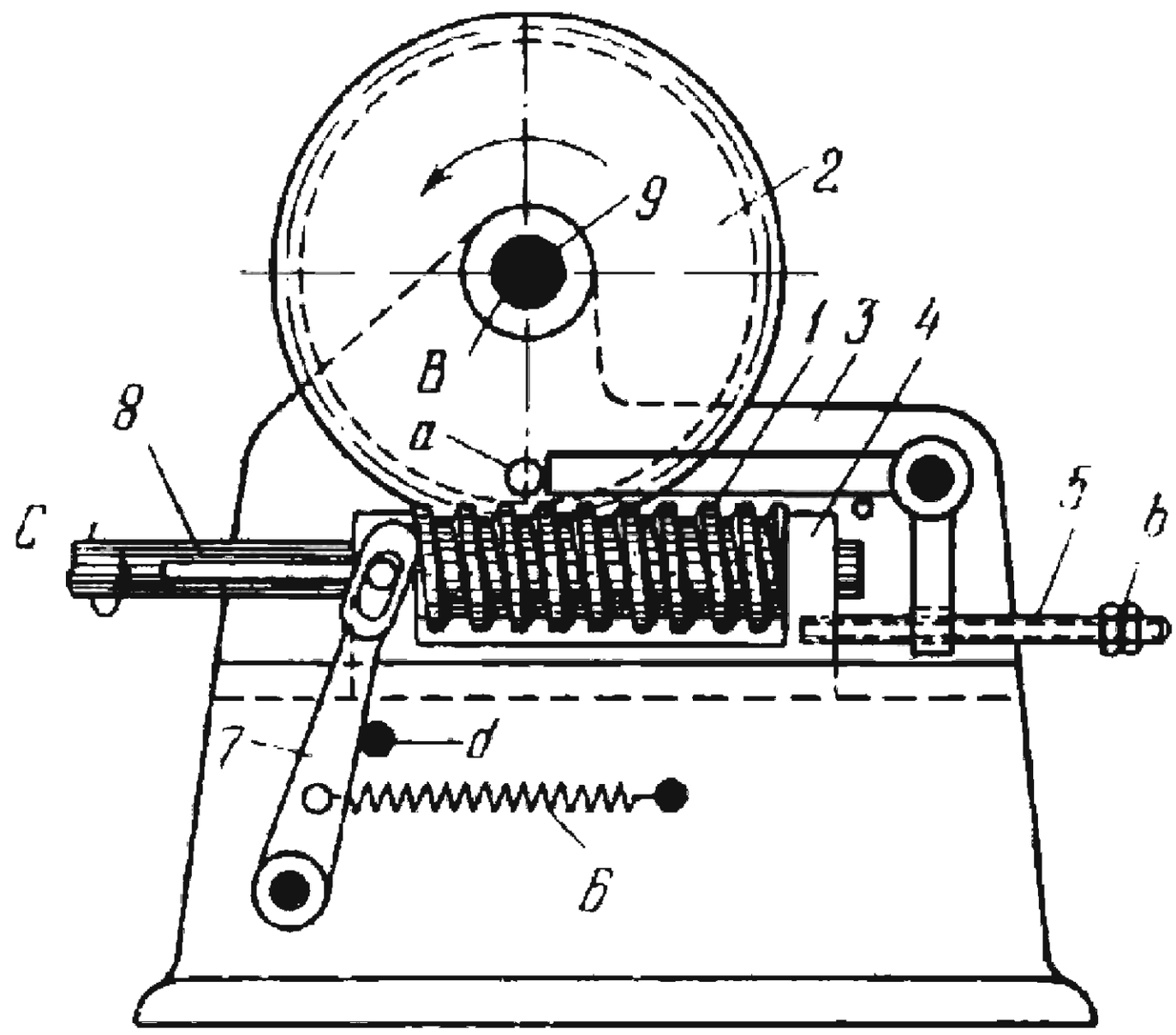

When driving spline shaft *8* rotates continuously about fixed axis *C*, worm *1*, which can slide along the splines of shaft *8* and meshes with worm wheel *2*, rotates the wheel counterclockwise. Worm wheel *2* is keyed to shaft *9* with which it rotates about fixed axis *B*. When pin *a* of wheel *2* runs up against one end of bell-crank lever *3*, wheel *2* and shaft *9* stop rotating and worm *1*, continuing to mesh with wheel *2* and to rotate with shaft *8*, travels to the left (like a screw in a nut) along axis *C* of shaft *8*, together with slide *4* and screw *5*, overcoming the resistance of spring *6*. This motion continues until nut *b* on screw *5* reaches the other leg of lever *3*, turning the lever and releasing pin *a* and worm wheel *2*. After this, rapid rotation is transmitted to wheel *2* until lever *7* reaches pin *d*. Then wheel *2* and shaft *9* begin to rotate at uniform velocity until pin *a* engages lever *3* again.

2823	TRIPLE-WHEEL INTERMITTENT WORM GEARING	WG ML

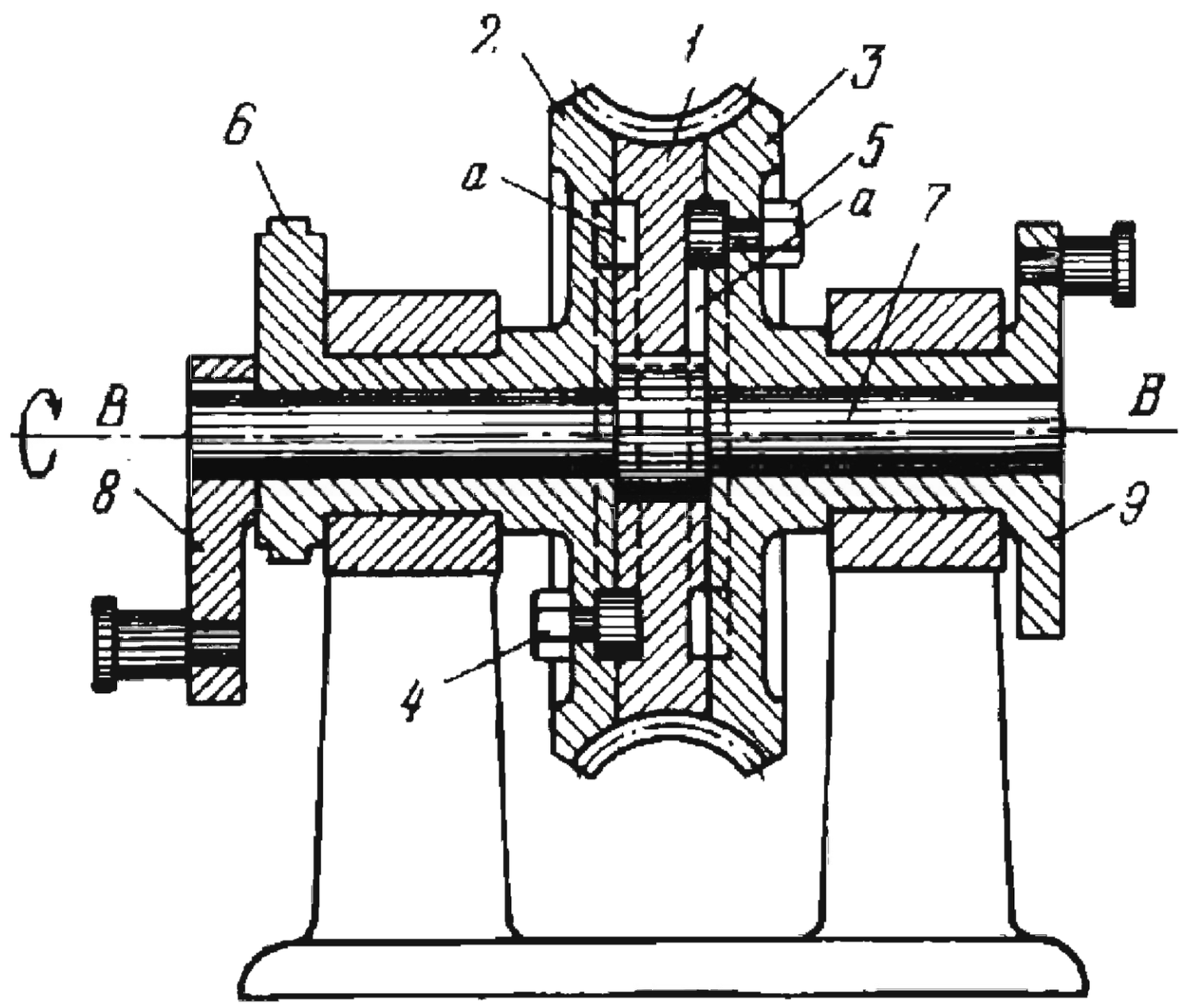

The worm wheel rotates about fixed axis *B-B* and is made up of three sections, *1*, *2* and *3*. Section *1* is keyed to shaft *7* and has two concentric slots *a*, one on each side. Sections *2* and *3* rotate freely on shaft *7*, but can be driven by stop bolts *4* and *5* whose heads enter slots *a* and concentric slots in sections *2* and *3*, long enough to allow adjustment of stop bolts *4* and *5*. In each of slots *a*, a stop (not shown) is fastened that engages stop bolt *4* or *5*. A part of the teeth, on an arc long enough to make complete disengagement with the worm (not shown), is cut from sections *1*, *2* and *3*. Thus when the part where the teeth are cut away on one of the sections faces the driving worm, the section remains stationary until a stop or stop bolt of the adjacent section runs up against the bolt or stop of the stationary section, after which the stationary section begins to rotate. Thus, by making various settings of stop bolts *4* and *5*, intermittent rotation in various combinations can be transmitted to crank *8*, keyed to shaft *7*; eccentric *6*, integral with section *2*; and crank *9*, integral with section *3*.

2824	WORM-GEAR MECHANISM FOR ALTERNATE INTERMITTENT ROTATION OF TWO PARALLEL SHAFTS	WG D

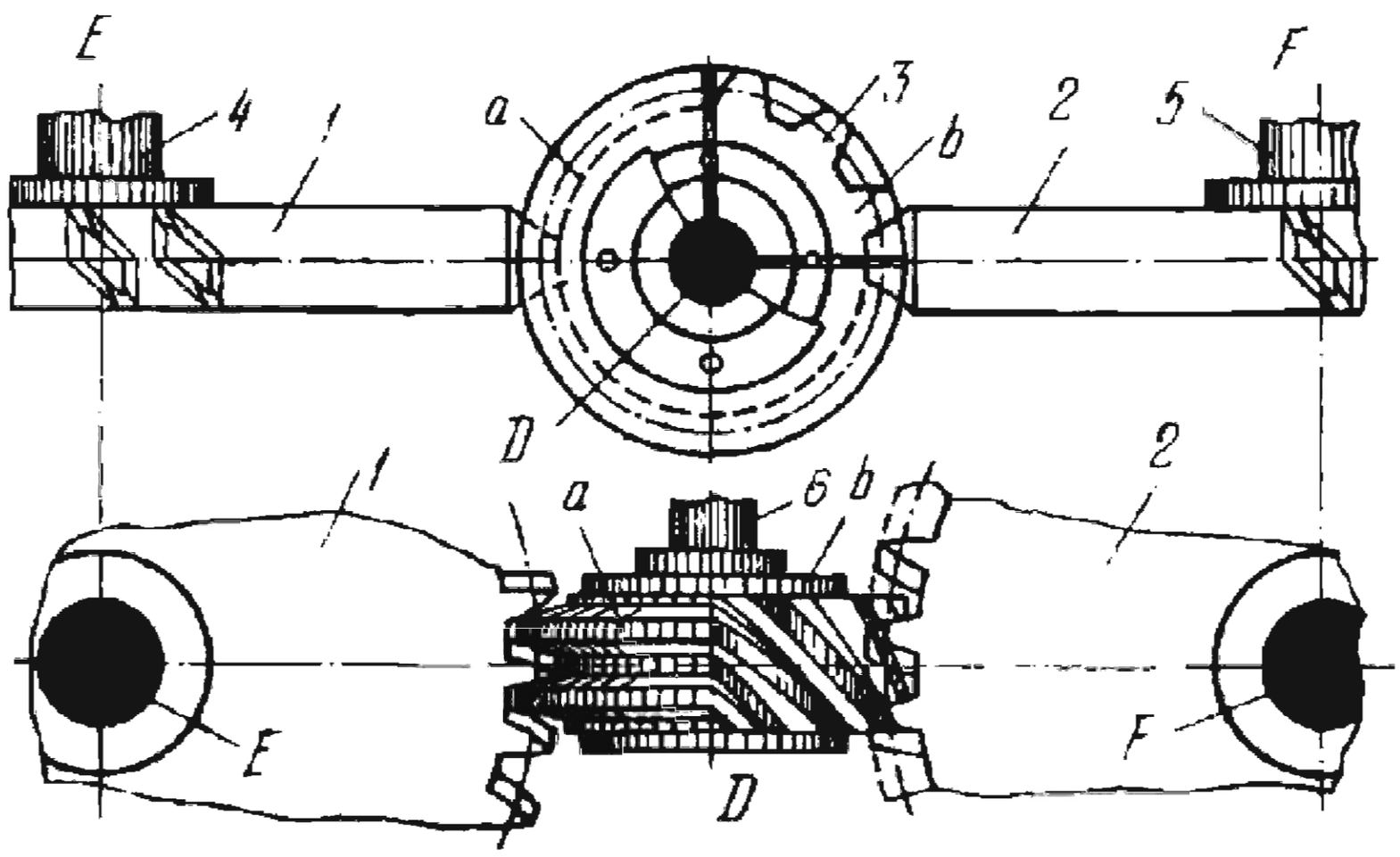

Worm wheels *1* and *2* are keyed to shafts *4* and *5*, and rotate about fixed parallel axes *E* and *F*. Worm *3* is keyed to driving shaft *6* and rotates about fixed axis *D*. Worm *3* is built up of two parts, *a* and *b*. Part *b* extends over one-fourth of the worm circumference and has helical teeth. Part *a* extends over three-fourths of the worm circumference and has two annular teeth with zero lead angle. When driving worm *3* rotates continuously, worm wheels *1* and *2* rotate alternately with dwells. The rotation period of wheel *1* or *2* corresponds to the time it is in mesh with part *b* of worm *3*. The idle period of wheel *1* or *2* corresponds to the period it is in mesh with the annular teeth of part *a* of the worm. Thus shafts *4* and *5* rotate alternately. When part *a* of the worm is in mesh with one of the worm wheels, the annular teeth of this part lock the worm wheel against unintentional rotation in its dwell period.

2825	HELICAL GEARING MECHANISM WITH DWELLS OF THE DRIVEN SLIDE	WG D

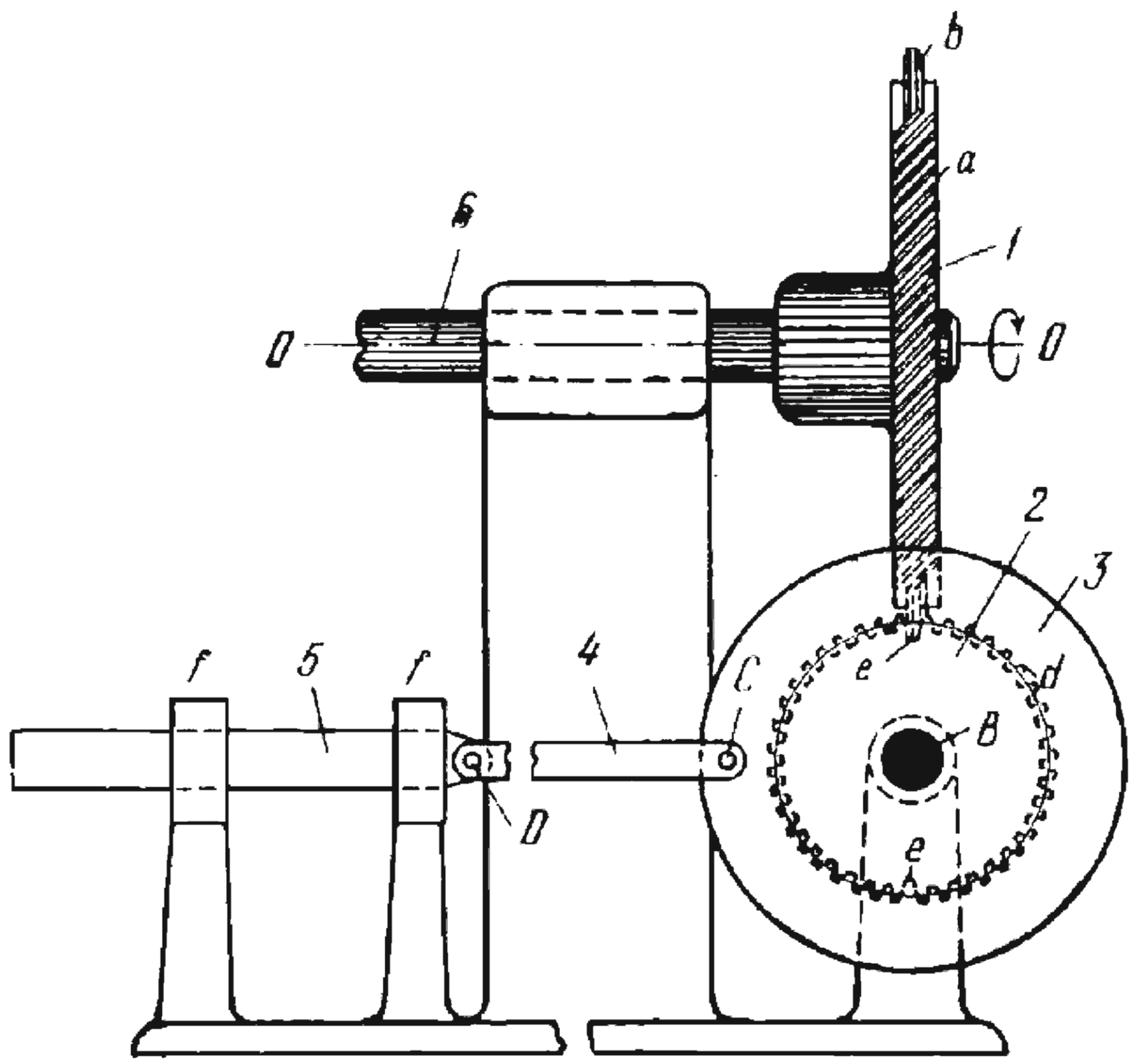

Helical gear *1* rotates about fixed axis *O-O*. Gear *1* has helical teeth *a* only around a portion of its circumference. Over the rest of its circumference it has concentric projection *b*. Helical gear *2* rotates about fixed axis *B* and, in addition to helical teeth *d*, has two straight grooves *e*. The number of teeth *a* on gear *1* is equal to the number of teeth *d* on one-half the circumference of gear *2*, between grooves *e*. Gear *1* is keyed on driving shaft *6*. To each revolution of shaft *6*, gear *2* turns through an angle of 180° after which projection *b* engages one of the grooves *e* to prevent unintentional rotation of gear *2* during its dwell period. Rigidly attached to gear *2* is disk *3* which is connected by turning pair *C* to connecting rod *4*. Slide *5* is connected by turning pair *D* to connecting rod *4* and reciprocates in fixed guides *f-f*. During each revolution of shaft *6*, slide *5* has a long dwell in one of its extreme positions.

2826	HELICAL AND WORM GEARING MECHANISM WITH DWELLS OF THE DRIVEN WHEEL	WG D

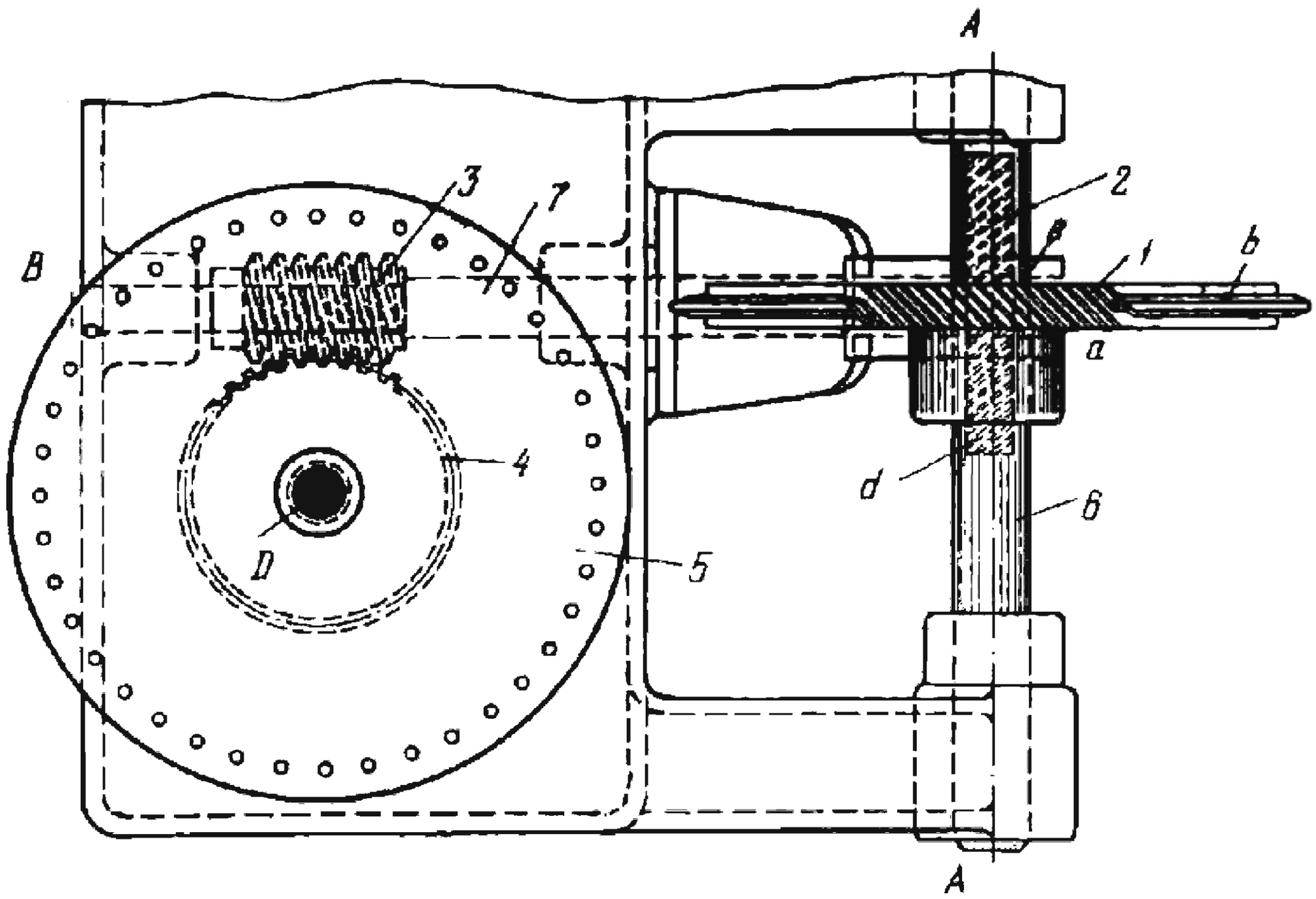

Helical gear *1* rotates about fixed axis *A·A* and has helical teeth *a* only around a portion of its circumference. Over the rest of its circumference it has concentric projection *b*. Helical gear *2* rotates about fixed axis *B* and, in addition to helical teeth *d*, has equally spaced straight grooves *e*. The number of teeth *a* on gear *1* is equal to the number of teeth *d* on gear *2* between two adjacent grooves *e*. Gear *1* is keyed on driving shaft *6*. To each revolution of shaft *6*, gear *2* turns through a certain angle after which projection *b* engages one of the grooves *e* to prevent unintentional rotation of gear *2* during its dwell period. Gear *2* is keyed to shaft *7* on which worm *3* is also keyed. Worm *3* meshes with worm wheel *4* which rotates about fixed axis *D*. When driving shaft *6* rotates continuously, disk *5*, rigidly attached to wheel *4*, rotates intermittently with dwells. The angle of rotation of disk *5* and its rotation and dwell times depend upon the numbers of teeth on gears *1* and *2*, and worm wheel *4*, and the number of threads (starts) on worm *3*.

2827	WORM GEARING WITH WORM DISENGAGEMENT	WG SE

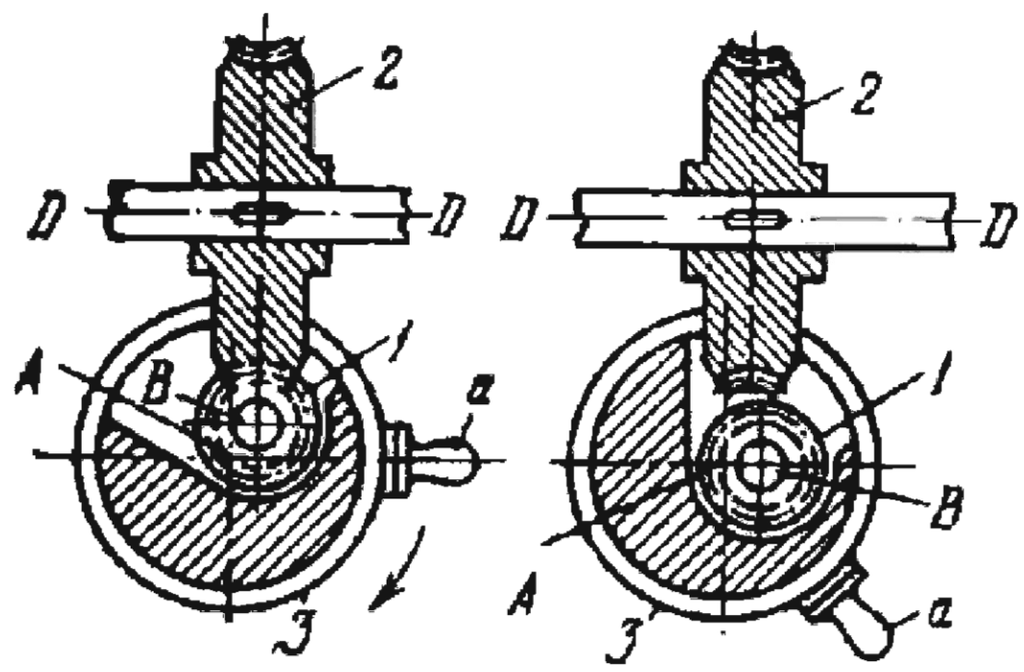

Worm *1* rotates about eccentrically located axis *B* of link *3* and meshes with worm wheel *2* which rotates about fixed axis *D-D*. Worm *1* is disengaged from wheel *2* by turning link *3* with handle *a* about fixed axis *A*.

2828	WORM GEARING OVERLOAD RELEASE MECHANISM	WG SE

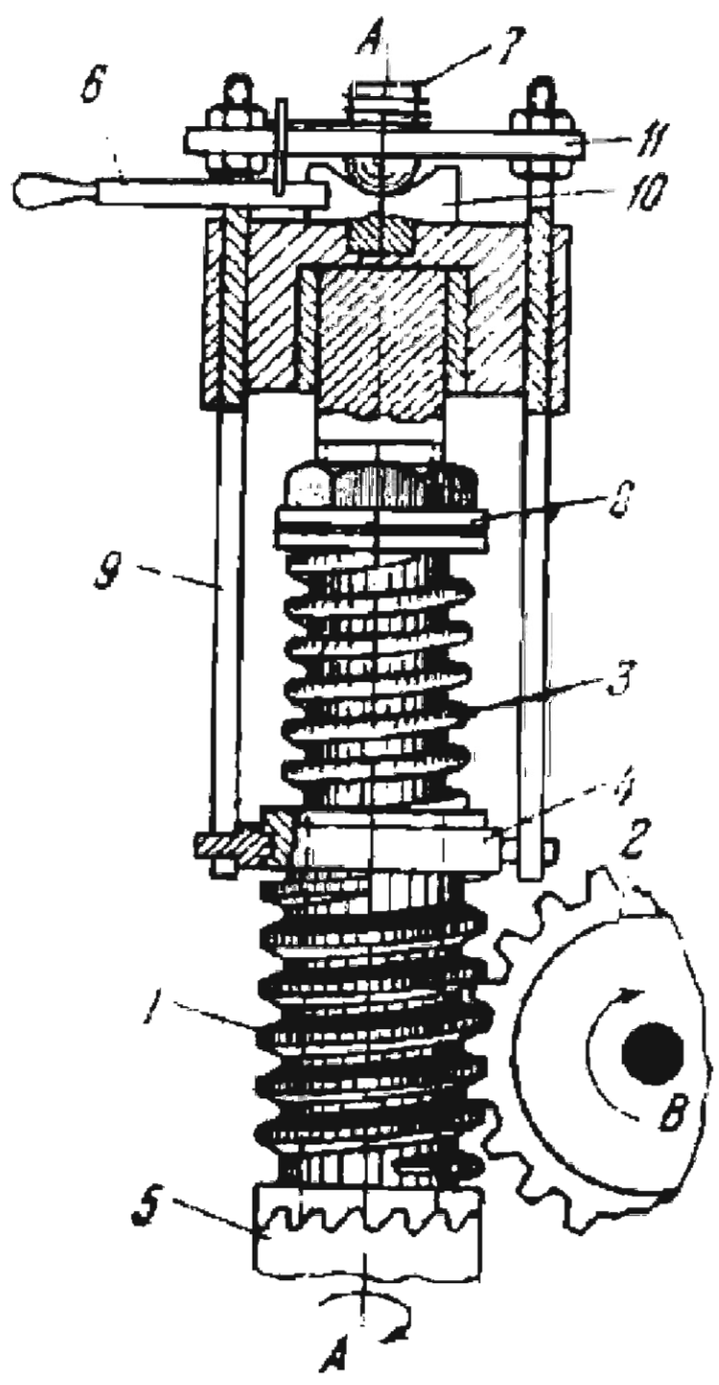

At normal load, the mechanism is in the position shown, and worm *1* rotates about fixed axis *A-A*, transmitting rotation to worm wheel *2* about fixed axis *B*. If there is an overload, the axial force exerted by worm *1* exceeds the resistance of spring *3* and worm *1*, together with ring *4*, rods *9* and plate *11*, is raised so that clutch *5*, which drives worm *1*, is disengaged. Worm wheel *2* stops. The worm is locked in the disengaged position by vee-block *10* which is turned with lever *6* by spring *7*. To reset the device, lever *6* is turned back so that spring *3* can push worm *1* downward, engaging clutch *5* again. The tension of spring *3*, which determines the maximum torque that can be transmitted, may be adjusted by nut *8* on the worm shaft.

2829	SINGLE-STAGE WORM REDUCING GEAR MECHANISM	WG SR

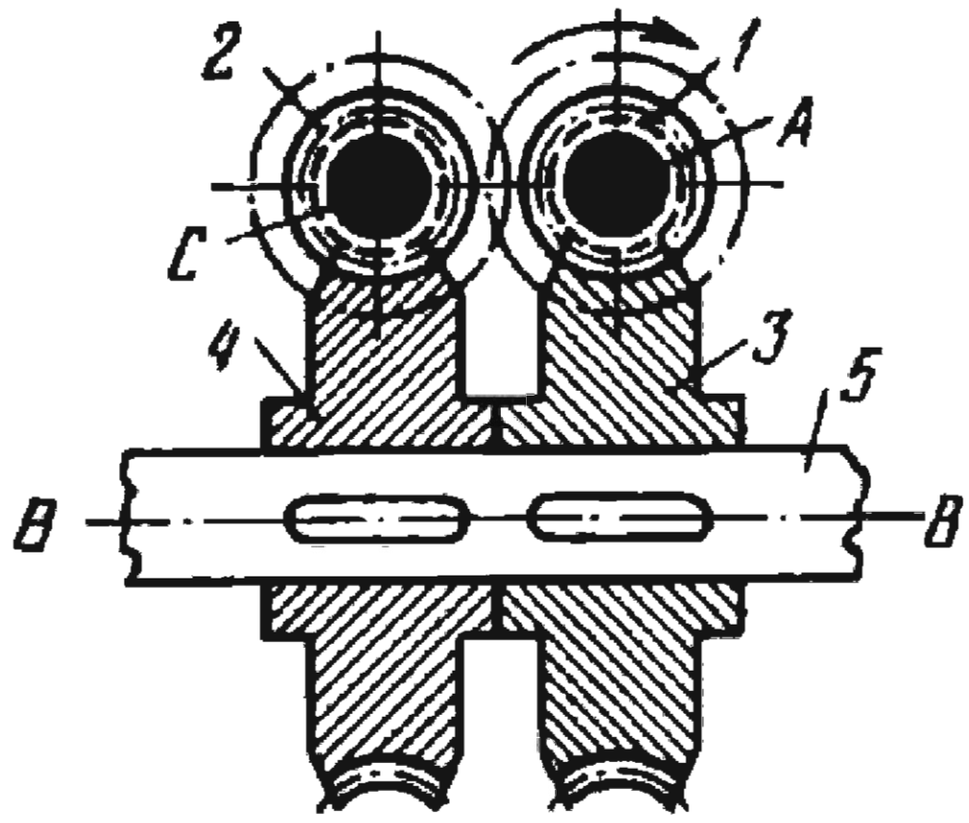

Worm *1* rotates about fixed axis *A* and meshes with worm wheel *3* which is keyed to shaft *5* and rotates about fixed axis *B-B*. Also keyed to shaft *5* is worm wheel *4* which meshes with worm *2*. Worm *2* rotates about fixed axis *C*. The transmission ratio of the mechanism is

$$i_{12}=\frac{z_3}{z_1}\frac{z_2}{z_4}$$

where z_3 and z_4 are the numbers of teeth on wheels *3* and *4*, and z_1 and z_2 are the numbers of threads (starts) on worms *1* and *2*. If worm *1* is the driving link, worm *2* will rotate only if its lead angle exceeds the angle of friction. Since the efficiency in a transmission from worm wheel to worm is very low (less than 0.5), this reducing gear cannot be employed for power drives, but it may prove expedient for low-power high-ratio drives.

2830	WORM-GEAR ADDING MECHANISM	WG MO

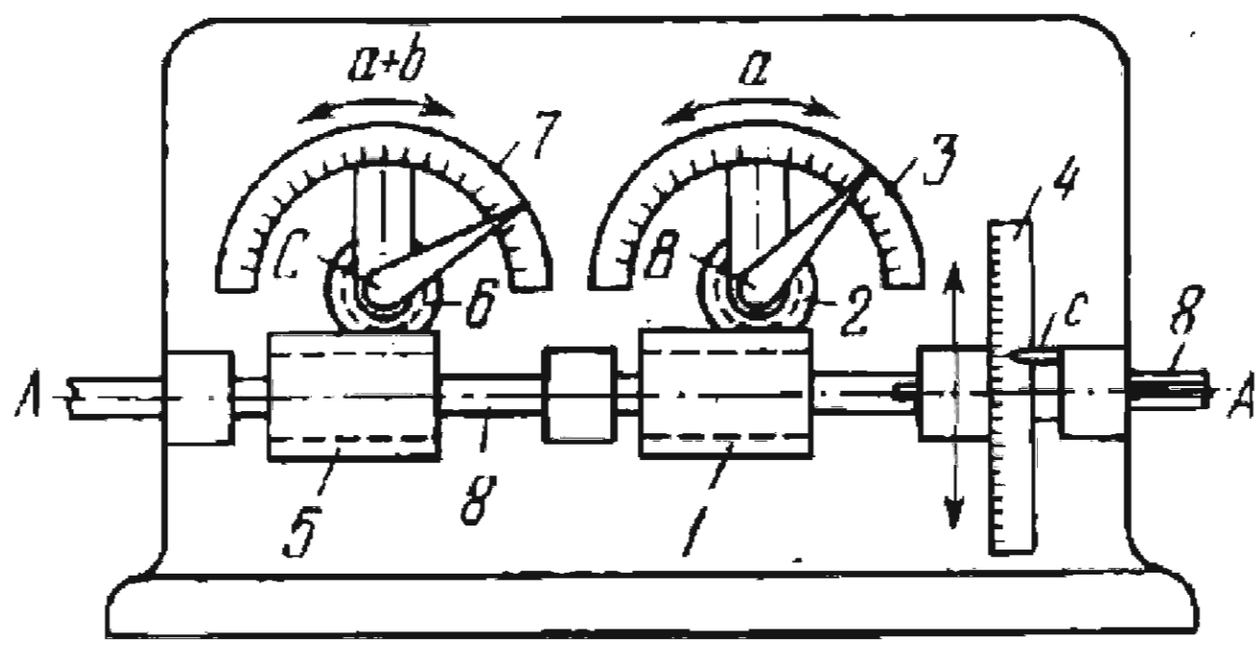

Shaft *8* rotates about fixed axis *A-A* and carries rigidly mounted round gear rack *1* and worm *5* which mesh with gears *2* and *6*. Gears *2* and *6* rotate about fixed axes *B* and *C*. One addend *a* is entered by shifting shaft *8* axially so that rack *1* turns gear *2* until the value of addend *a* is indicated on scale *3*. In this axial motion of shaft *8*, worm *5* turns gear *6* through an angle equal to the angle of rotation of gear *2*. The second addend *b* is entered by turning shaft *8* until the value of addend *b* is indicated by pointer *c* on dial *4* which is keyed to the shaft. When shaft *8* is turned, gear *2* remains stationary and gear *6* turns an amount corresponding to the second addend. The sum $a + b$ is read off on scale *7*.

2831	WORM-GEAR ADDING MECHANISM	WG MO

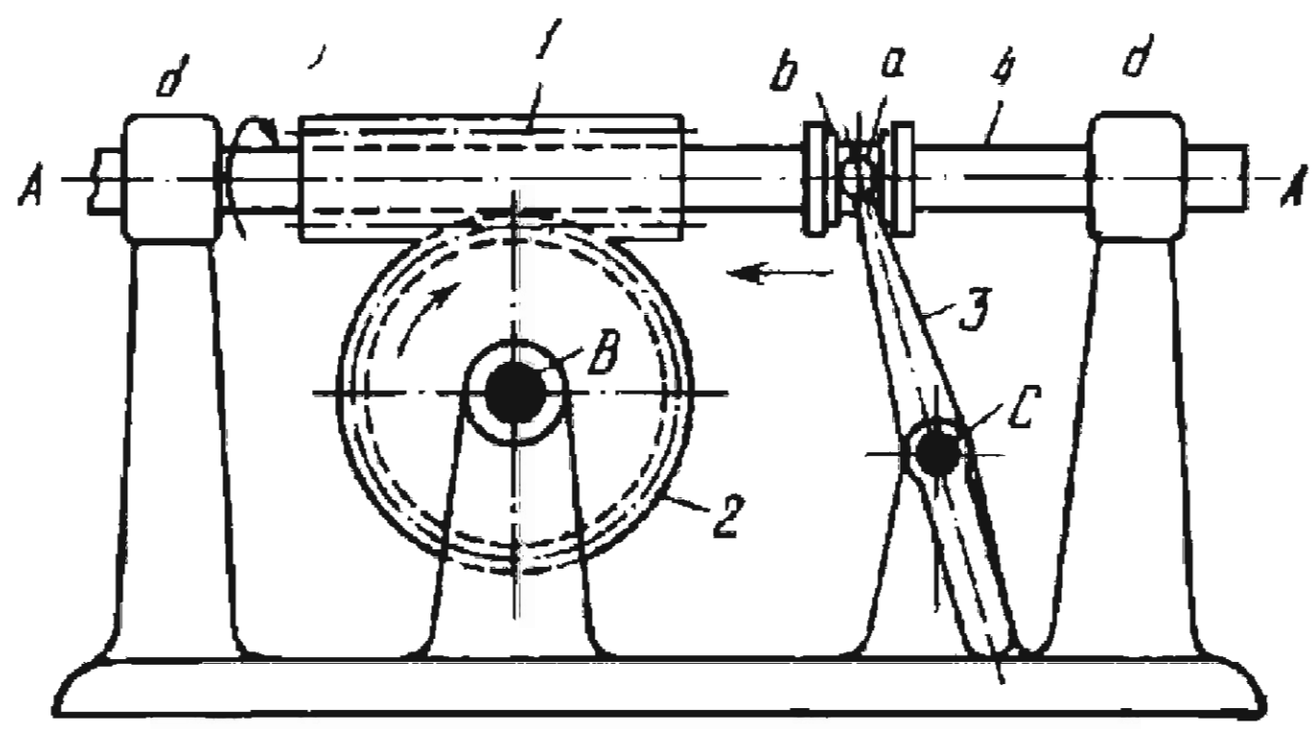

Worm *1*, keyed to shaft *4*, rotates about fixed axis *A-A* and meshes with worm wheel *2* which rotates about fixed axis *B*. Shaft *4* can also slide axially in fixed guides *d-d*. Lever *3* turns about fixed axis *C* and has pin *a* which engages slot *b* of shaft *4*. The angular displacement of wheel *2* can be the sum of two rotary motions: that obtained from worm *1* as it rotates about axis *A-A* and that due to the axial travel of the worm. In the latter case, worm *1* is traversed by lever *3* and its operation is that of a gear rack.

2832	WORM-GEAR ADDING MECHANISM WITH A FLEXIBLE LINK	WG MO

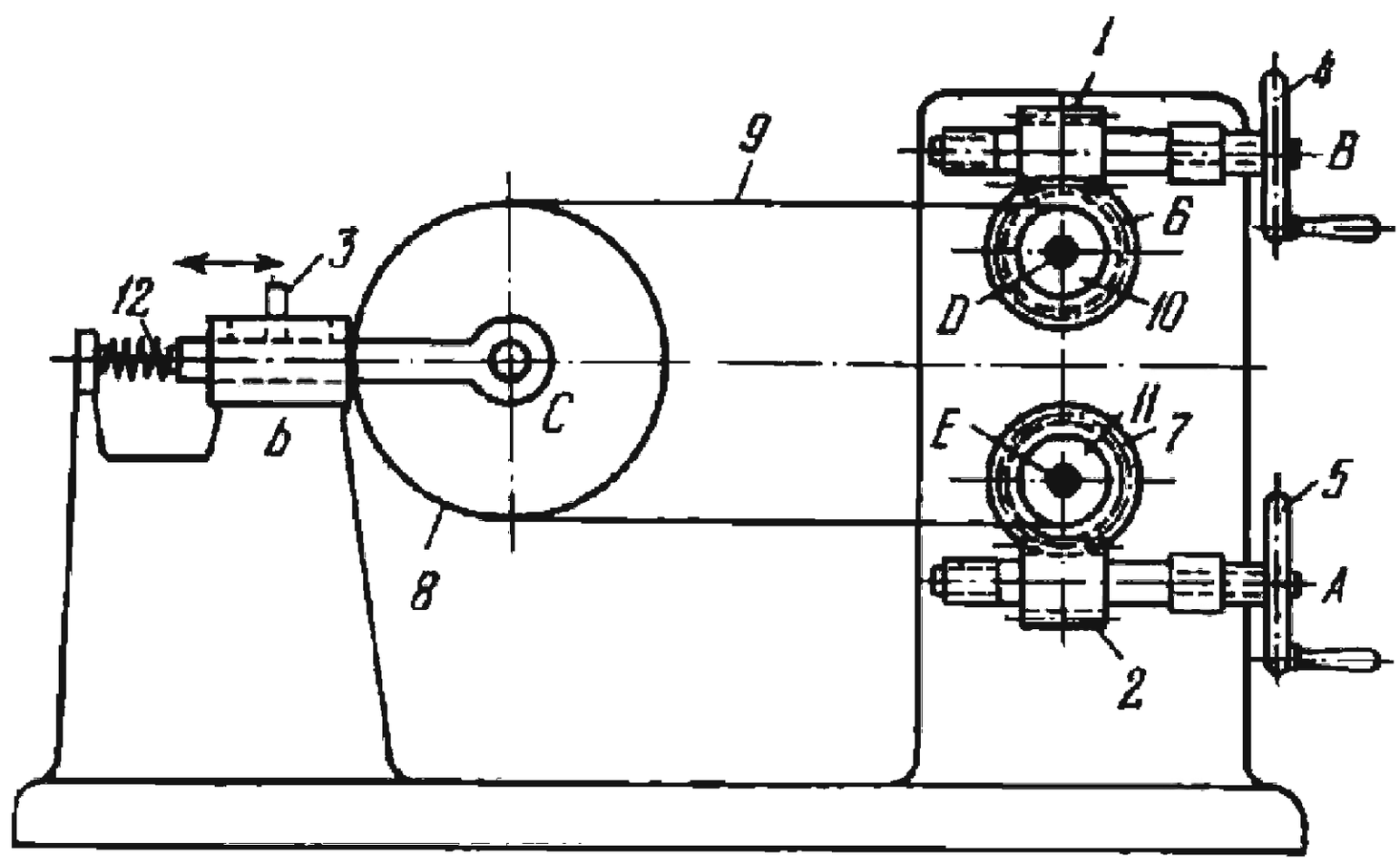

Worms *1* and *2* rotate about fixed axes *B* and *A*, and are driven by handwheels *4* and *5*. Worms *1* and *2* mesh with worm wheels *6* and *7* which rotate about fixed axes *D* and *E*. Flexible link *9* runs over pulley *8* and its ends are wound on pulleys *10* and *11* which are rigidly attached to (or integral with) wheels *6* and *7*. Pulley *8* is connected by turning pair *C* to slide *3* which moves in fixed guide *b*. Spring *12* tensions flexible link *9*, eliminating slack in the mechanism. The linear travel of slide *3* can be the sum of two rotary motions accomplished by handwheels *4* and *5*.

2833	WORM GEARING MECHANISM OF A REVOLUTION COUNTER	WG M

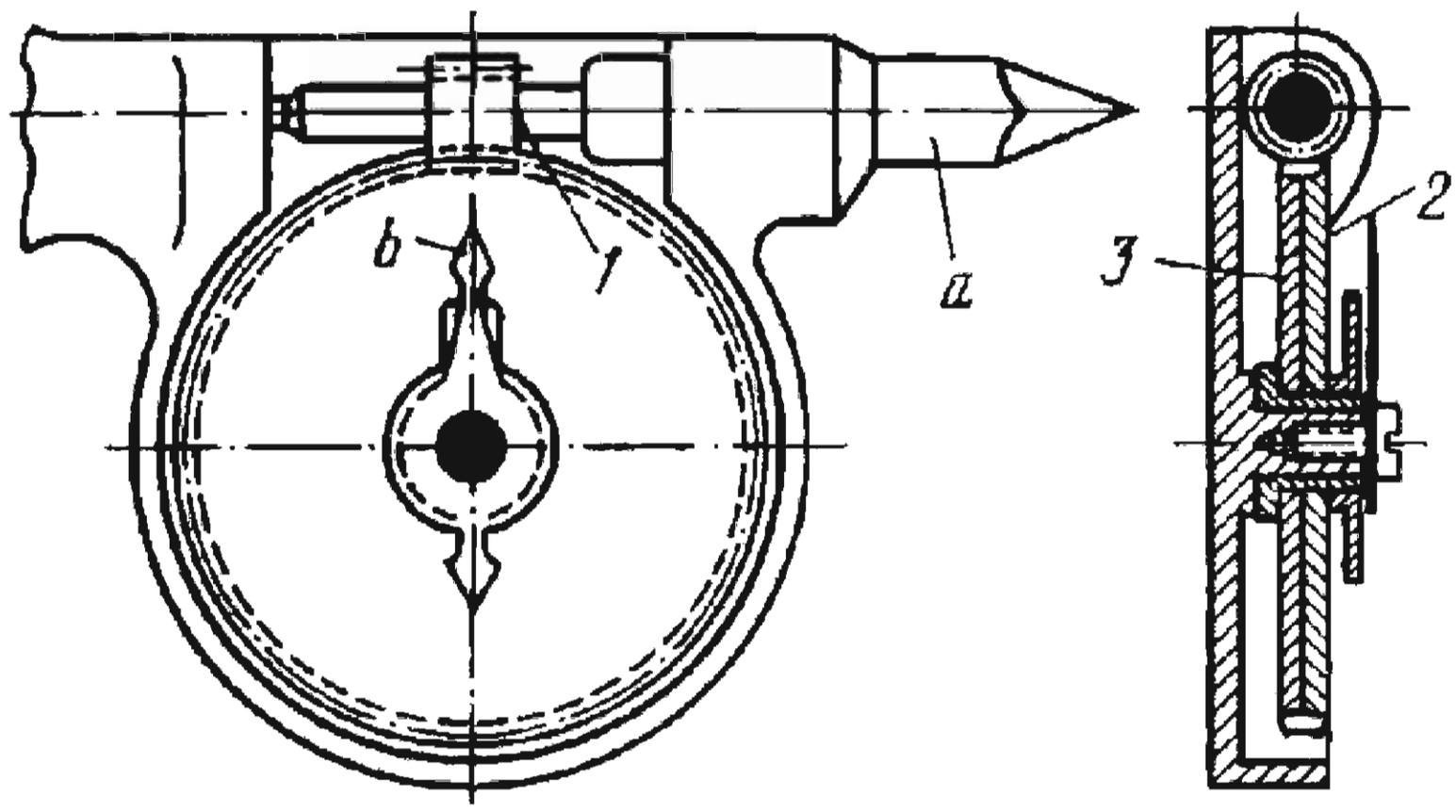

The rotation of point *a*, held firmly in contact with the centre-punched recess at the end of the shaft whose revolutions are to be counted, is transmitted by worm *1* to worm wheels *3* and *2* which have 100 and 101 teeth, respectively. The difference in the number of revolutions they make is used to determine the number of revolutions of the shaft being tested. Wheel *3* carries hand *b* and wheel *2*, a dial scale.

2834	WORM GEARING MECHANISM OF A DIAL INDICATOR	WG M

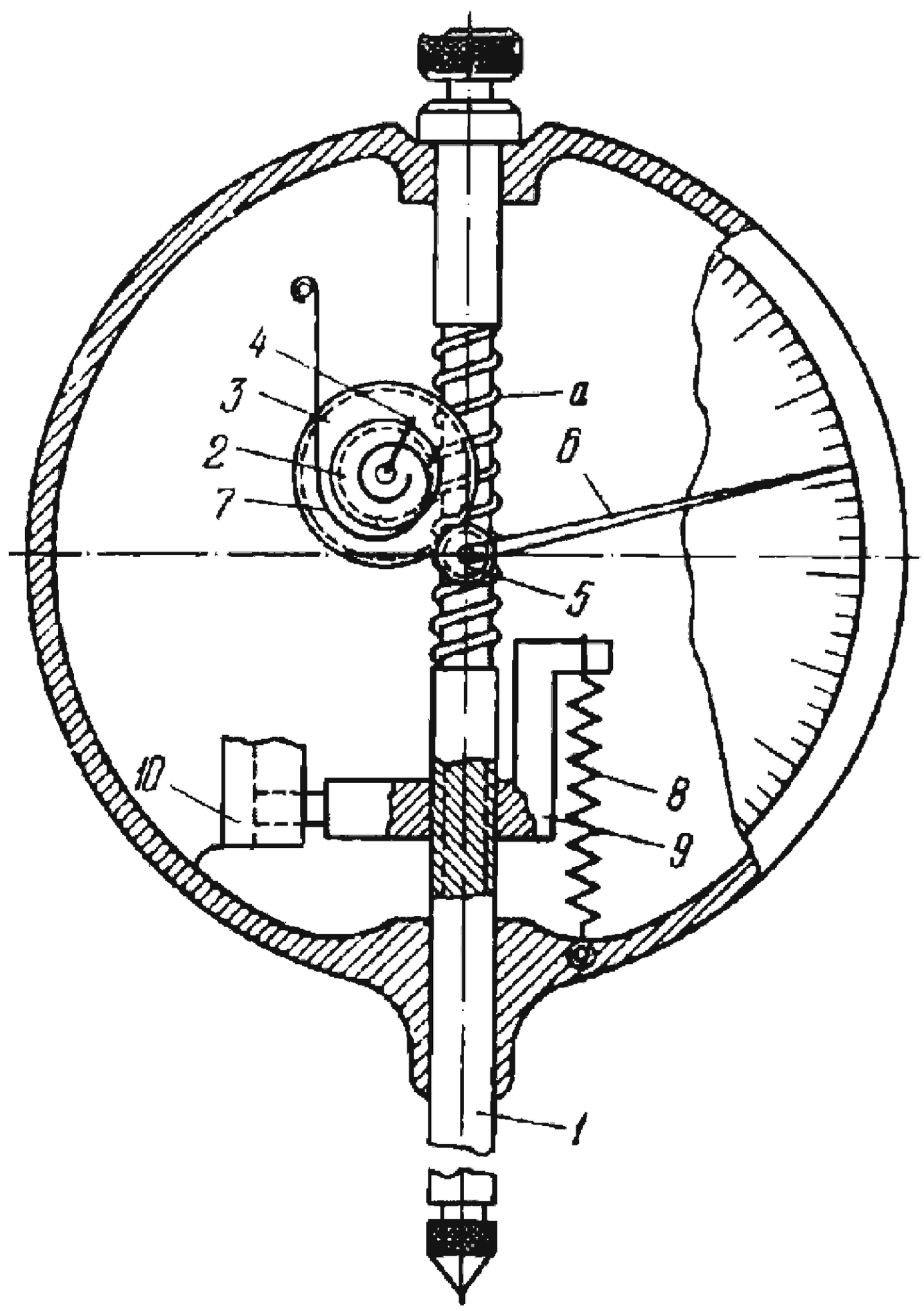

In the middle along its length, indicator spindle *1* has integral worm *a* which meshes with worm wheel *2*. Rigidly attached to the shaft with wheel *2* are gear *3* and revolution-counter hand (telltale) *4* which indicates the number of whole millimetres. Gear *3* meshes with pinion *5* which is rigidly attached to large hand *6*. Hand *6* indicates hundredths of a millimetre. Backlash in the mechanism is eliminated by spiral spring *7*. Spring *8* provides a constant contact pressure. Spindle *1* is connected by a screw pair to bracket *9* to which one end of spring *8* is attached. When spindle *1* is turned, bracket *9* is traversed axially, adjusting the contact pressure. Guide *10* prevents rotation of bracket *9*.

2835	WORM GEARING MECHANISM OF A REVOLUTION COUNTER	WG M

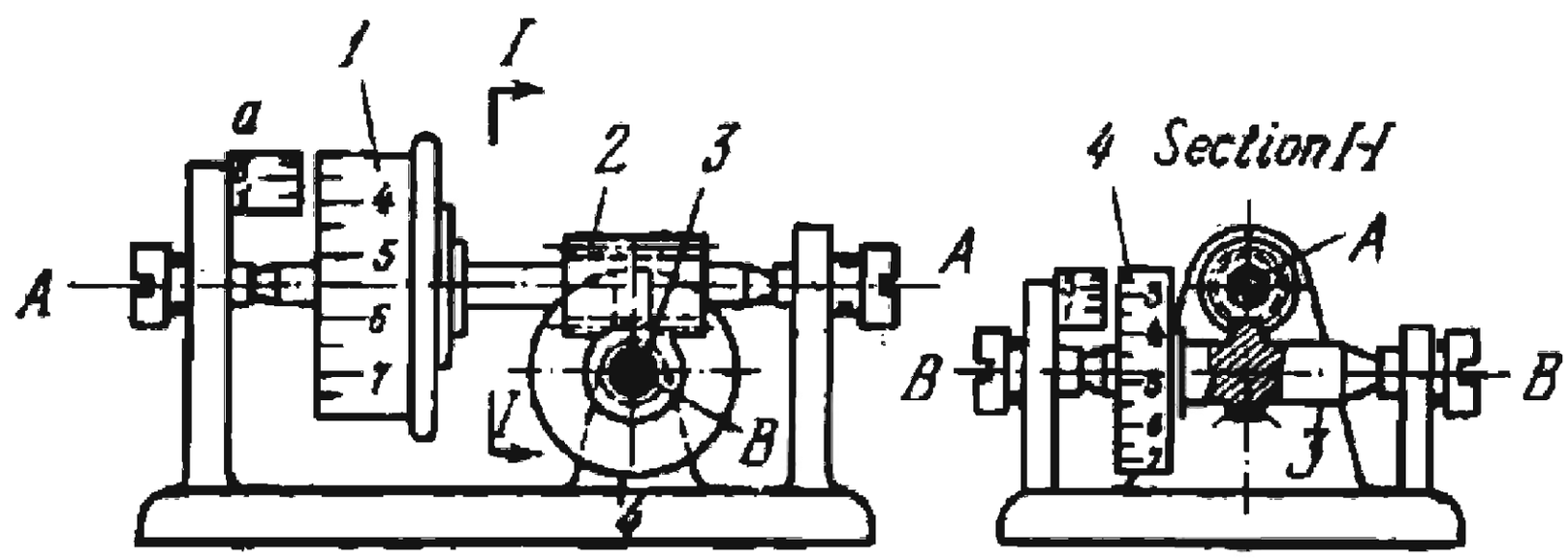

Worm *2* rotates about fixed axis *A-A* and meshes with worm wheel *3* which rotates about fixed axis *B-B*. Drum dial *1* is rigidly mounted on the worm shaft and drum dial *4* on the wheel shaft. Whole revolutions of worm *2* are indicated on dial *4*. Fractional revolutions of worm *2* are read off on dial *1* by means of vernier *a*.

2836	WORM AND SCREW MECHANISM OF A WIRE COILER	WG FD

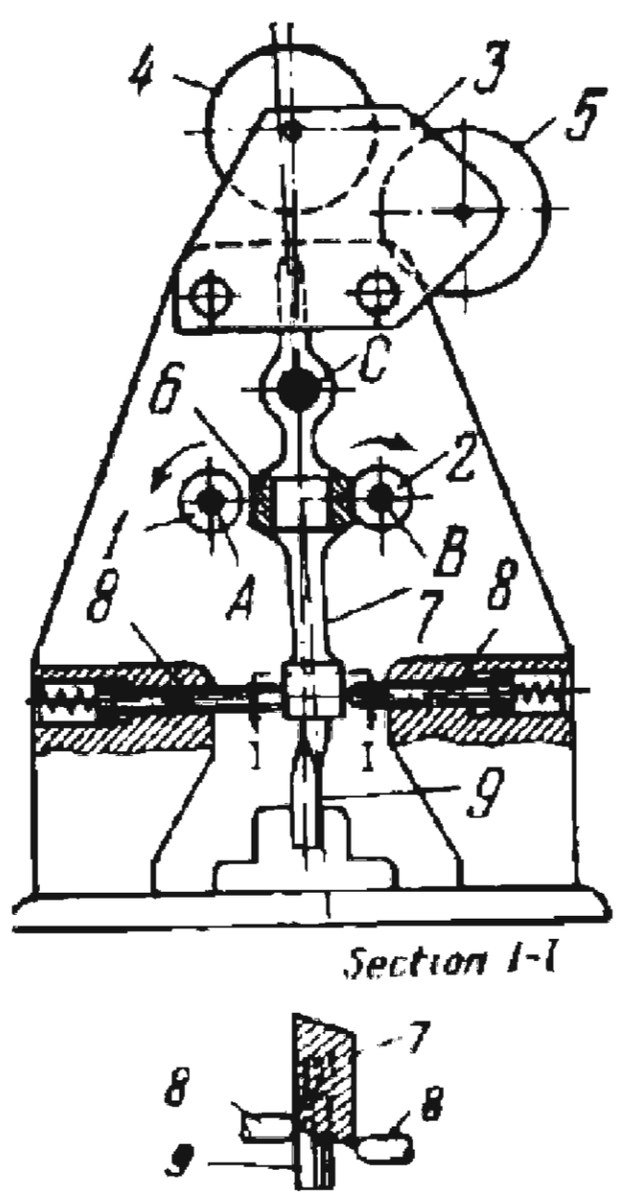

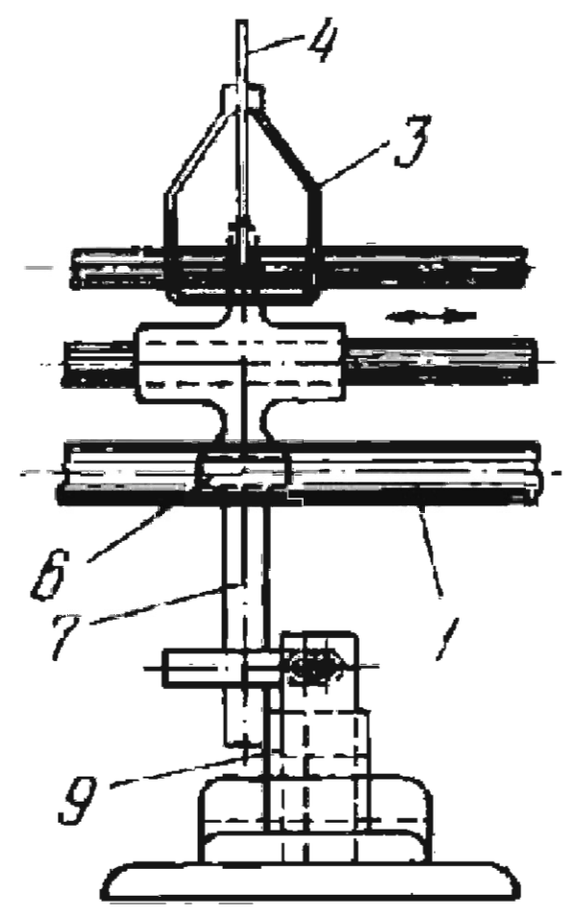

Lead screws (worms) *1* and *2* rotate in opposite directions about fixed axes *A* and *B*, traversing carriage *3* with wire-feeding pulleys *4* and *5* along guides to the right or left, depending on which screw (*1* or *2*) half-nuts *6* engage. Link *7* turns about fixed axis *C* and is subject to the action of two spring-loaded plungers *8*, which tend to hold it in the central (disengaged) position. The tip at the bottom of link *7* slides along bevelled bar *9* which, at the end of each stroke, swivels link *7* so that half-nuts *6* are taken out of engagement with one screw and into engagement with the other. This reverses carriage travel so that the wire is coiled in successive layers.

2837	WORM GEARING MECHANISM OF THE VANE-TYPE GOVERNOR OF TELEGRAPH APPARATUS	WG FD

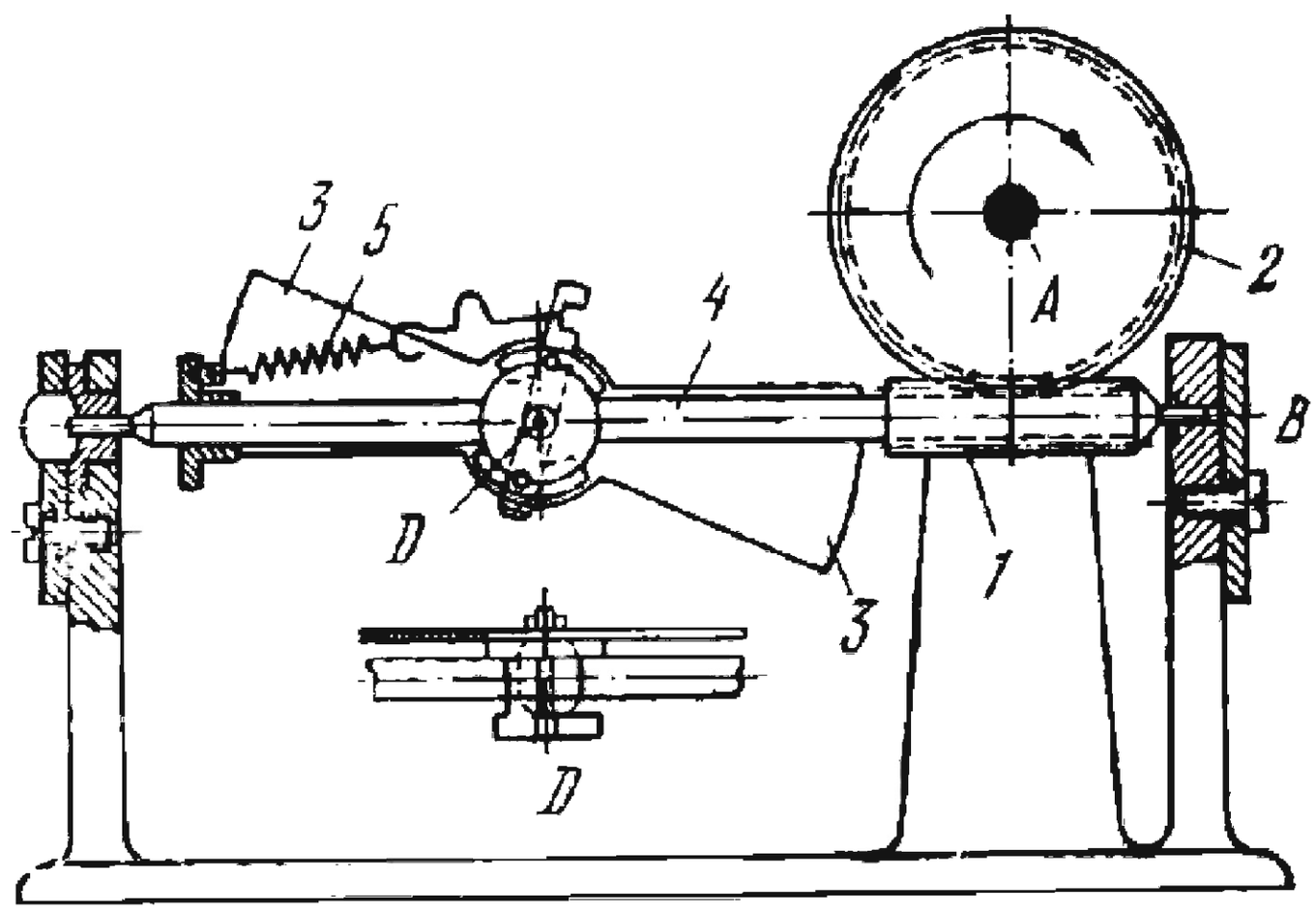

Worm wheel *2* rotates about fixed axis *A* and meshes with worm *1* which rotates about fixed axis *B*. Turning about axis *D* on a pin carried by worm shaft *4* are vanes *3*. Braking of shaft *4* begins when worm wheel *2* rotates at a certain definite speed and increases with the speed of the shaft because centrifugal force turns vanes *3* about axis *D*, overcoming the resistance of spring *5*. For the transmission of rotation from wheel *2* to worm *1*, the lead angle of the latter must be sufficiently large.

2838	WORM GEARING MECHANISM FOR AUTOMOBILE STEERING GEAR	WG FD

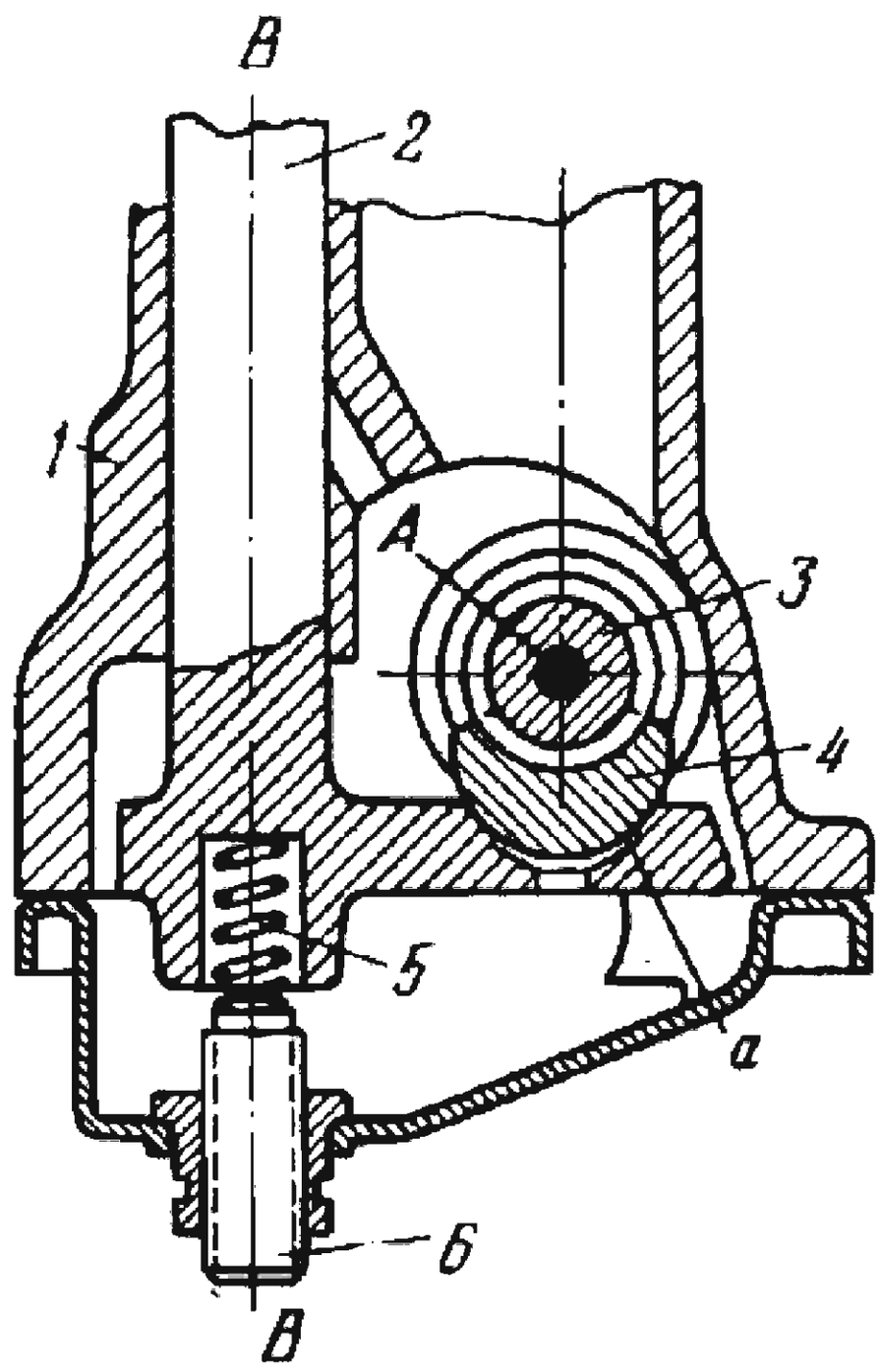

Worm *3* rotates about fixed axis *A* and meshes with spherical half-nut *4* which is seated in spherical recess *a* of pitman arm shaft *2*. When worm *3* is turned, half-nut *4* is displaced in a direction parallel to the worm axis, turning shaft *2*, which controls the front wheels of the automobile, about fixed axis *B-B*. Half-nut *4* is held constantly in engagement with worm *3* by spring *5* whose tension is adjusted by screw *6*. Shaft *2*, mounted in housing *1* as in a bearing, can turn about a vertical axis.

2839	WORM GEARING AND CAM MECHANISM OF A MICROSCOPE DRAWTUBE	WG FD

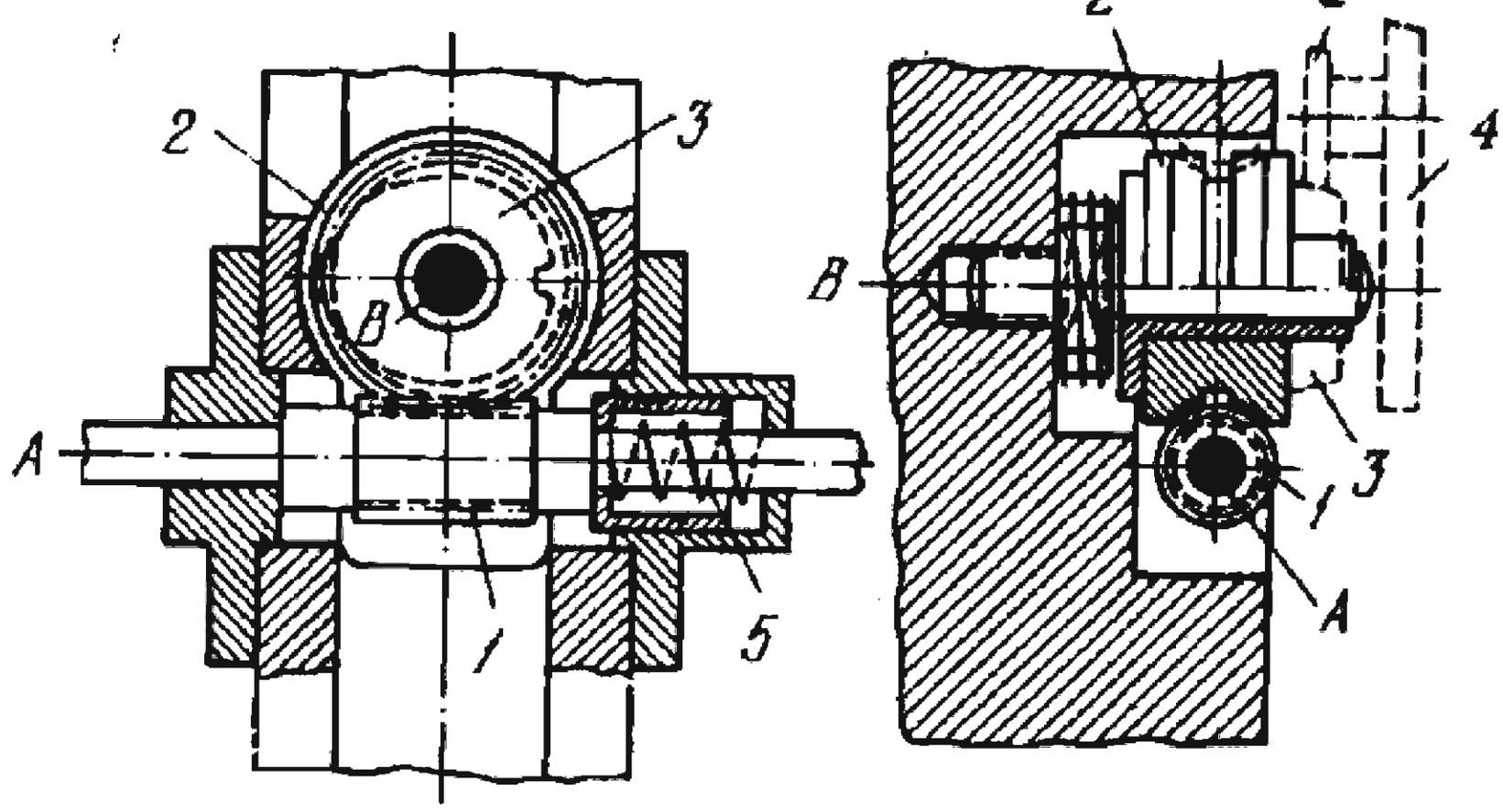

Worm *1* rotates about fixed axis *A* and meshes with worm wheel *2* which rotates about fixed axis *B*. Rigidly attached to wheel *2* is cylinder cam *3* which transmits reciprocating motion to roller *a* of the microscope drawtube *4*. Spring *5* eliminates backlash in the mechanism.

2840	WORM GEARING MECHANISM FOR MACHINING CYLINDER CAMS	WG FD

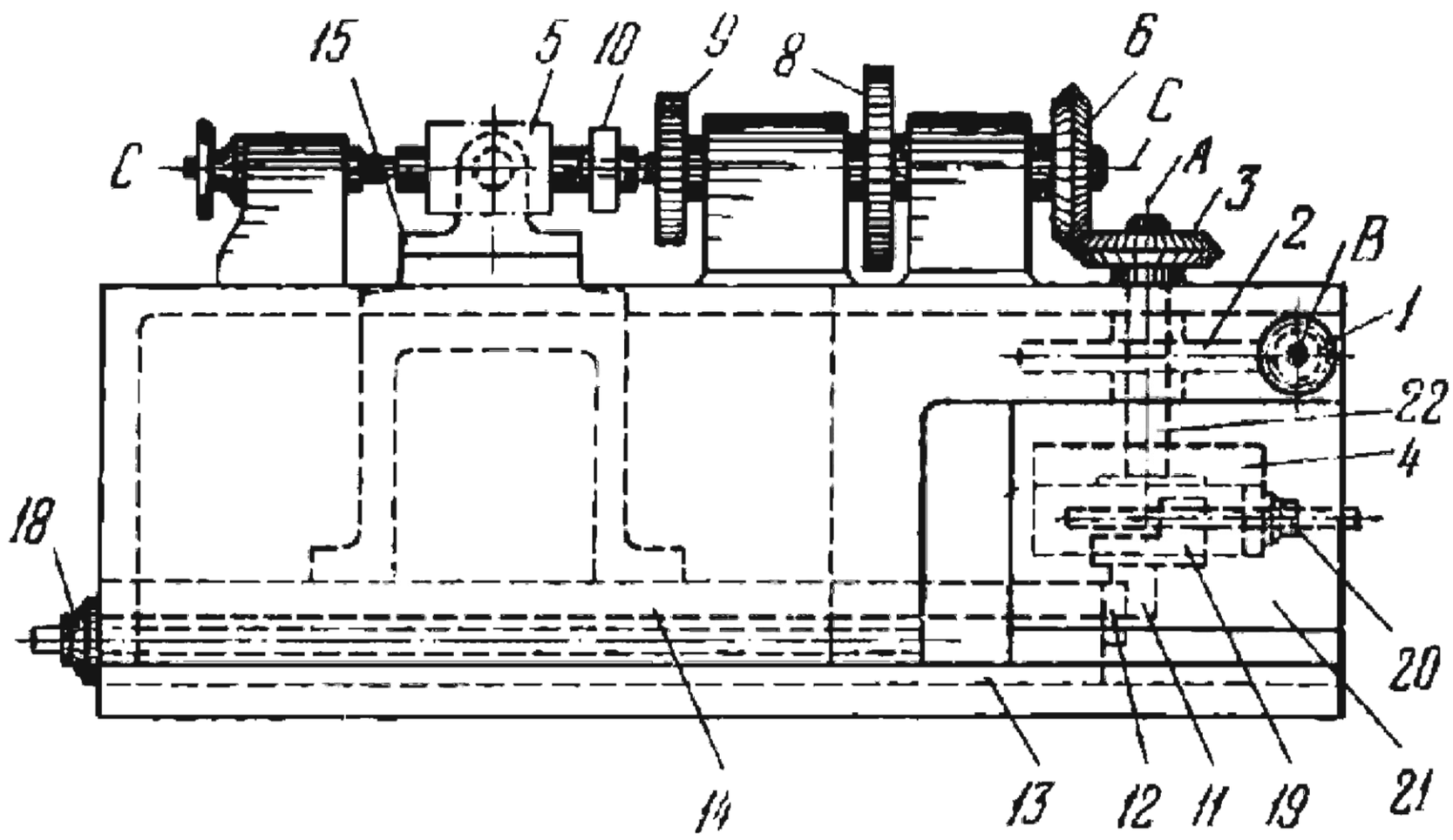

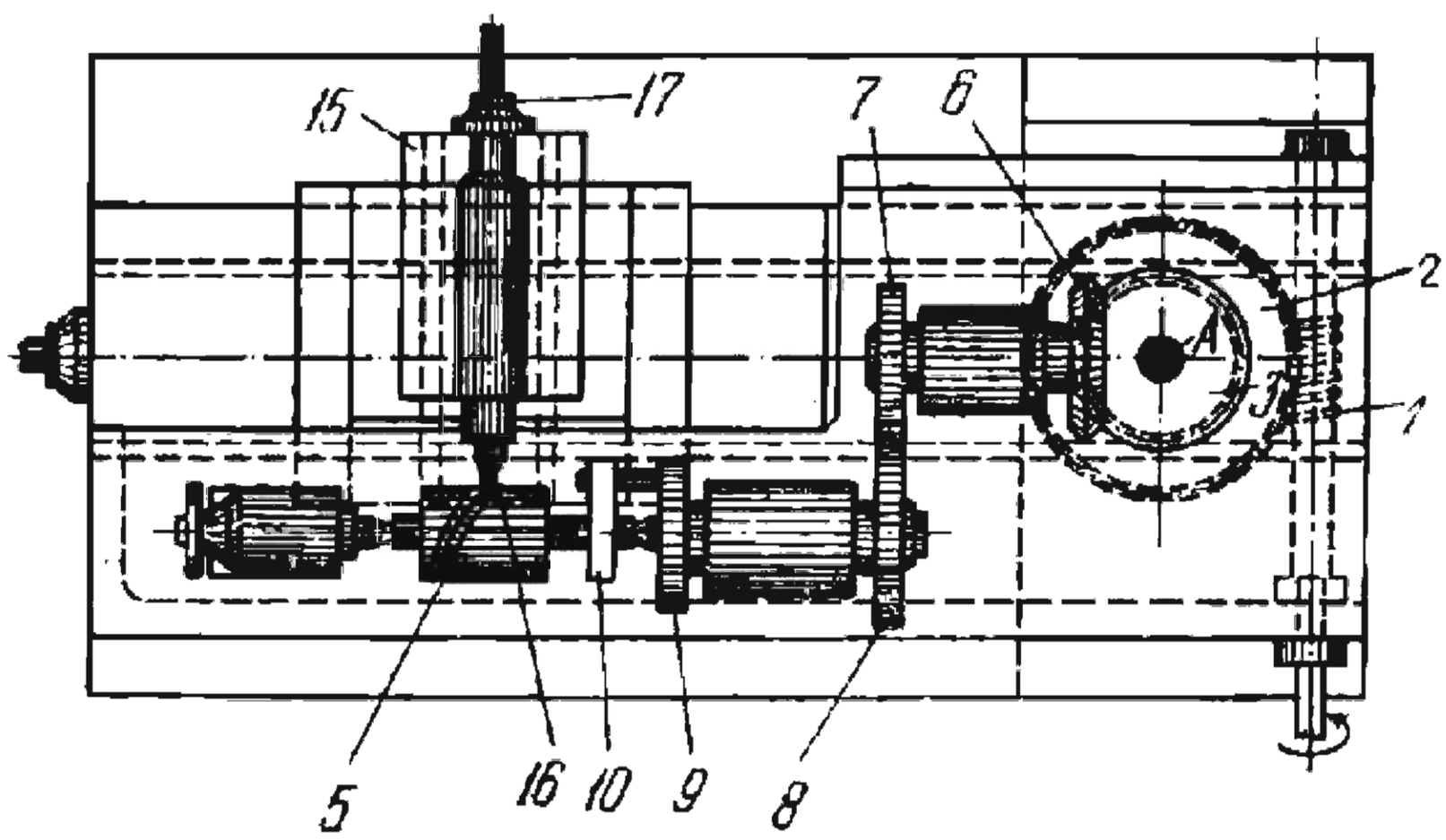

Shaft *22* rotates about fixed axis *A* and is driven by worm *1* which rotates about fixed axis *B* and worm wheel *2* which rotates about axis *A*. Keyed to shaft *22* are disk *4* with guides and bevel gear *3*. Slide block *19* can be adjusted along the guides of disk *4* and locked in the required position by screw *20*. Slide block *19* carries the bearing of pin *11* whose projecting part is of semicircular shape. When shaft *22* rotates, pin *11*, whose flat surface engages plate *12*, which is secured to the base, displaces slides *14* and *21*, mounted on carriage *13*. A the same time, cam blank *5* is rotated about fixed axis *C-C* through bevel gears *3* and *6*, spur gears *7* and *8*, and links *9* and *10*. The slot is machined in blank *5* by end milling cutter *16* and the required axial travel of the blank is set up by means of screw *20*. The minimum distance from the end face of the blank to the cam slot is set up by adjusting slide *14* longitudinally with screw *18*. The depth of the cam slot is set up by adjusting cross slide *15* with screw *17*. The pitch of the cam slot is set up by installing the required change gears *3*, *6*, *7* and *8*.

2841	WORM GEARING MECHANISM OF A COPYING DEVICE	WG FD

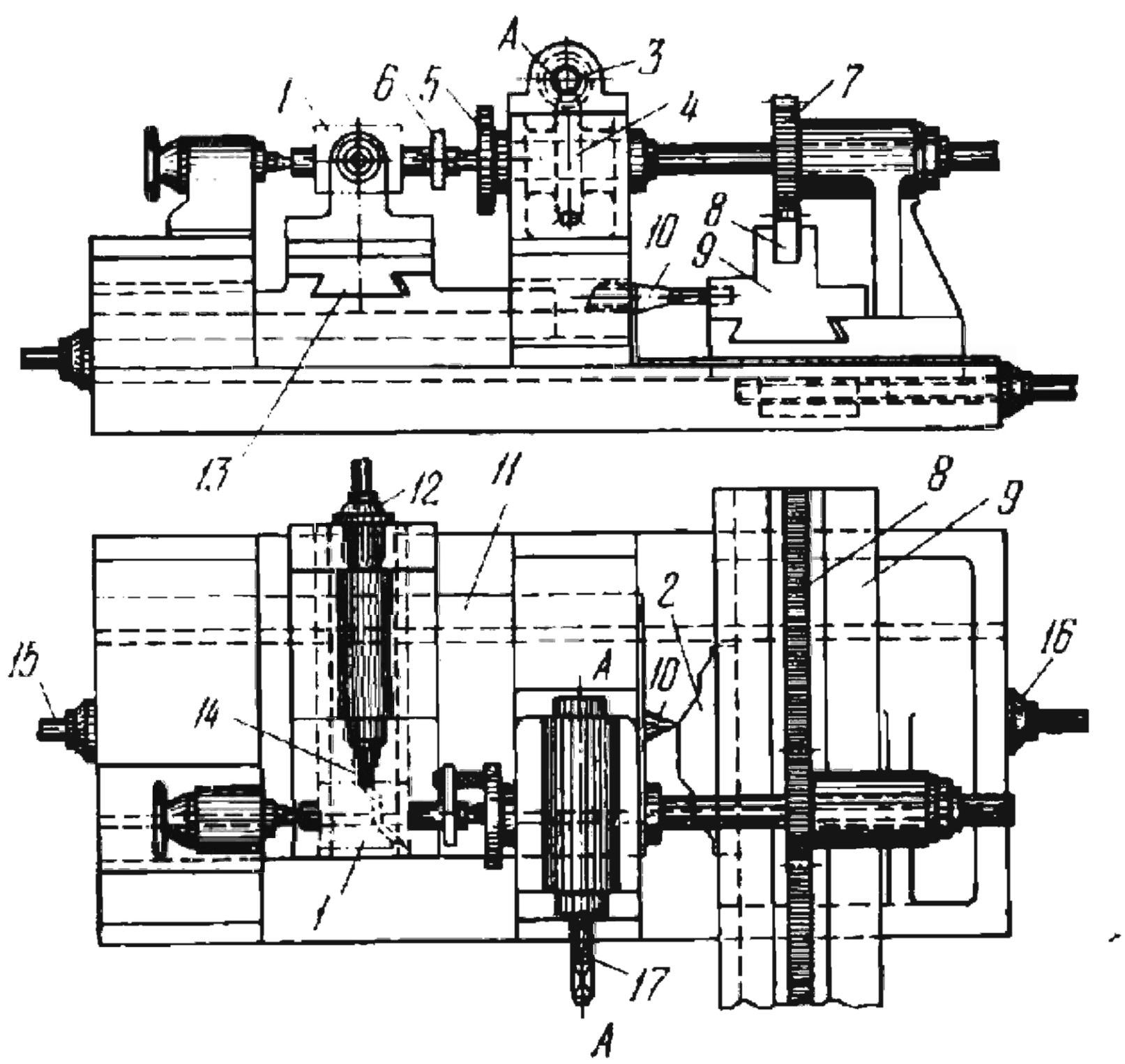

When shaft *17* rotates about axis *A-A*, motion is transmitted simultaneously to cam blank *1* and to template *2*. Blank *1* is rotated through worm *3*, worm wheel *4*, and links *5* and *6*. Template *2* is traversed in the crosswise direction by worm *3*, worm wheel *4*, gear *7* and rack *8* which is secured to slide *9*, carrying template *2*. As slide *9* is traversed, template *2* engages stylus *10*, imparting longitudinal displacement to slide *11*. Slide *13* with end milling cutter *14* travels together with slide *11*. Slide *9* is adjusted in the longitudinal direction when the template is changed by screw *16*. The minimum distance from the end face of the blank to the cam slot is set up by an adjustment made with screw *15*. The depth of the cam slot is set up by adjusting cross slide *13* with screw *12*.

2842	WORM GEARING MECHANISM FOR MACHINING HARMONIC-MOTION PLATE CAMS	WG FD

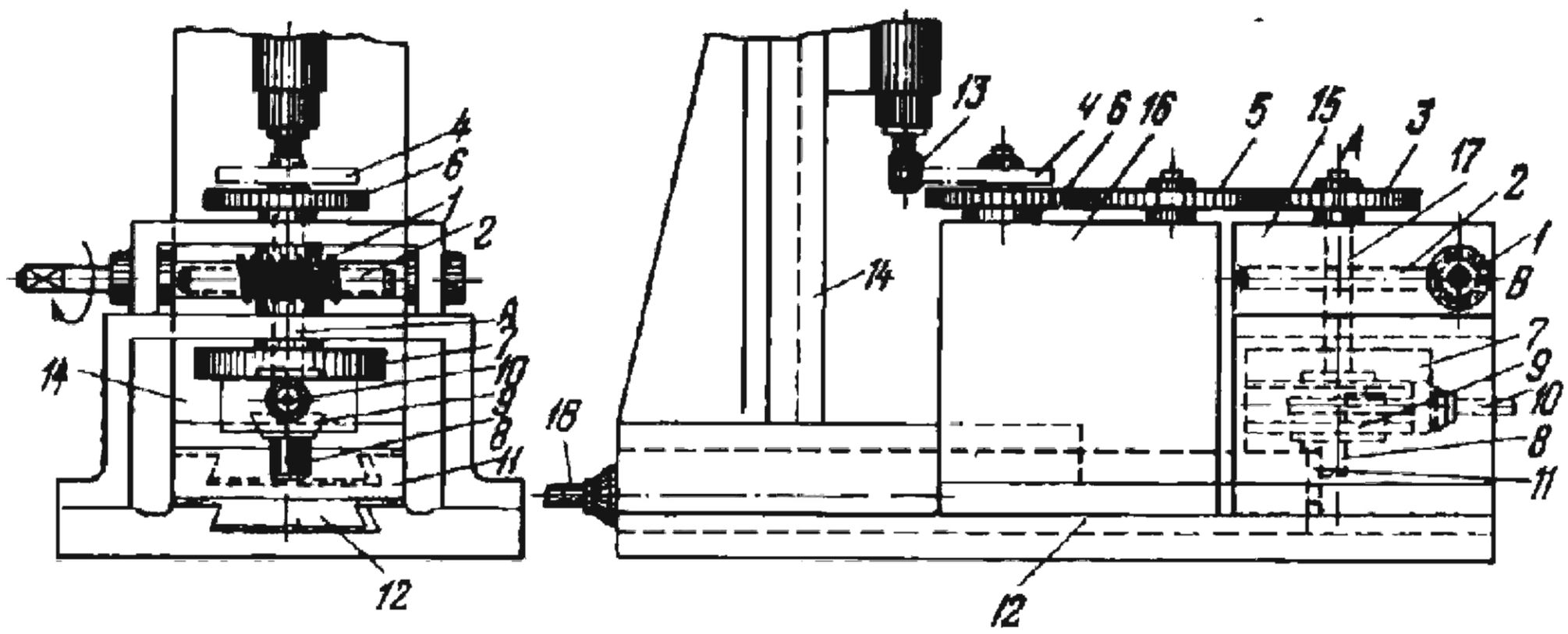

Shaft *17* is rotated about axis *A* by worm *1*, rotating about fixed axis *B*, and worm wheel *2*. Keyed to shaft *17* are disk *7* with guides and gear *3*. Slide block *9* can be adjusted along the guides of disk *7* and locked in the required position by screw *10*. Slide block *9* carries the bearing of pin *8* whose projecting part is of semicircular shape. When shaft *17* rotates, pin *8*, whose flat surface engages plate *11* which is secured to the base, displaces slides *15* and *16*, mounted on carriage *12*. At the same time, cam blank *4* is rotated about its axis by gears *3*, *5* and *6*. The profiled surface of cam *4* is machined by end milling cutter *13* and the required rise of the cam is set up by means of screw *10*. The minimum radius of the cam is set up by adjusting milling head slide *14* longitudinally with screw *18*. The cam rise per degree of rotation is set up by changing the gears.

SECTION NINETEEN

Complex Gear Mechanisms

CxG

---

1. Speed-Change and Reducing Gear Mechanisms SR (2843 through 2869)
2. Planetary Speed-Change and Reducing Gear Mechanisms PR (2870 through 2899)
3. Differential Speed-Change and Reducing Gear Mechanisms DR (2900 through 2925)
4. Strain Wave Gearing Mechanisms SW (2926 through 2932)
5. General-Purpose Multiple-Link Mechanisms ML (2933 through 2944)
6. Mechanisms for Mathematical Operations MO (2945 through 2950)
7. Mechanisms of Materials Handling Equipment MH (2951 through 2958)
8. Mechanisms of Vibrating Machines and Devices VM (2959, 2960 and 2961)
9. Clutch and Coupling Mechanisms C (2962 and 2963)
10. Mechanisms of Measuring and Testing Devices M (2964 through 2967)
11. Brake Mechanisms Br (2968)
12. Mechanisms of Other Functional Devices FD (2969 through 2977)

2843	TWO-SPEED GEARBOX MECHANISM WITH A TOOTHED CLUTCH	CxG SR

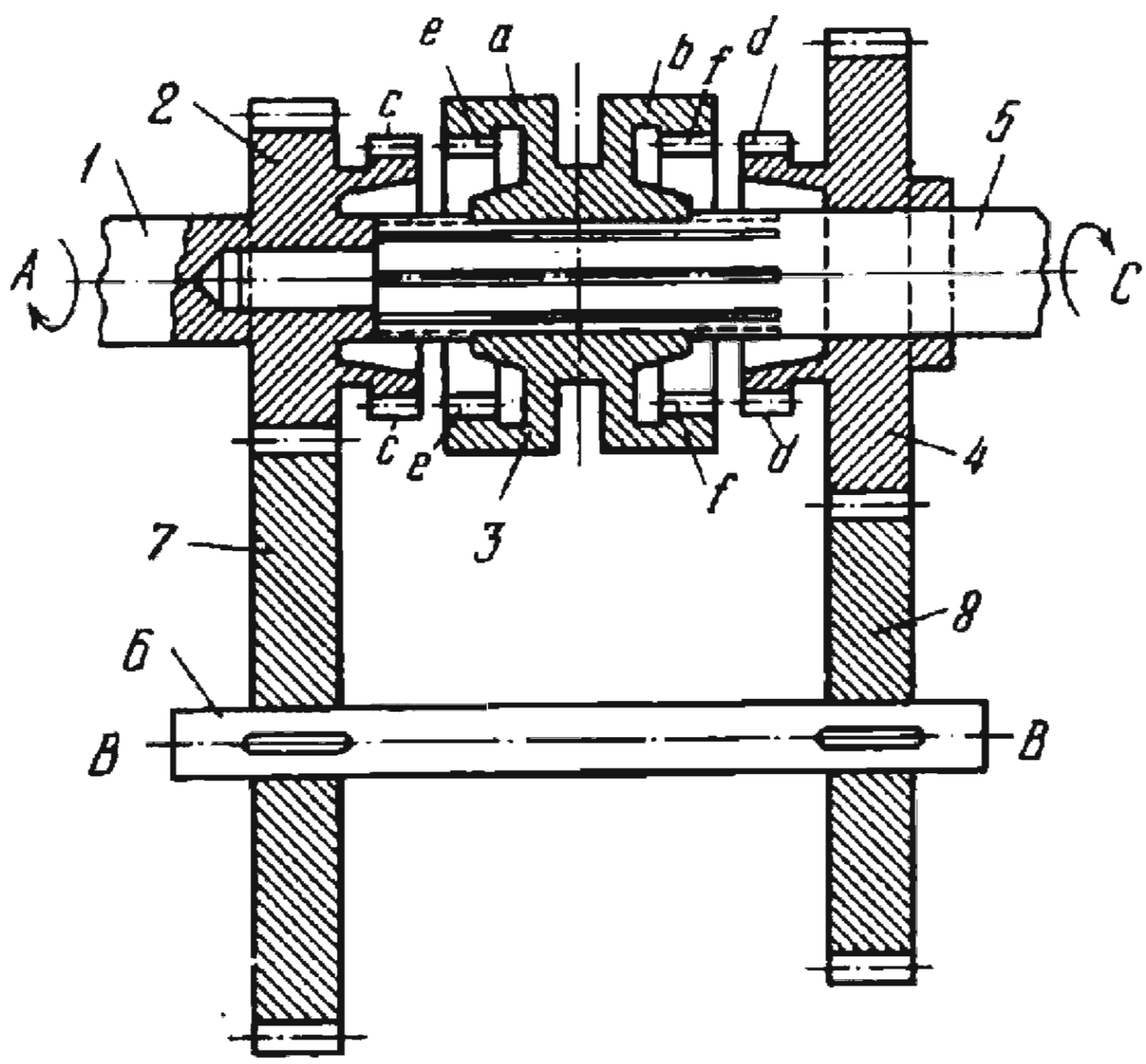

Driving shaft *1* rotates about fixed axis *A* and is rigidly attached to (or integral with) gear *2*. Gear *4* is freely mounted on driven shaft *5*. Toothed clutch *3* is mounted on the splines at the left end of shaft *5* which rotates about fixed axis *C*. Clutch *3* consists of halves *a* and *b*, having internally toothed members *e* and *f* which engage the externally toothed clutch members *c* and *d*, integral with gears *2* and *4*. Gears *2* and *4* mesh with gears *7* and *8* which are keyed to intermediate shaft *6*, rotating about fixed axis *B-B*. When clutch *3* is shifted to the left so that the teeth of member *e* engage those of member *c*, rotation of driving shaft *1* is transmitted directly to driven shaft *5*, i.e. shaft *5* rotates at the same speed as shaft *1*. When clutch *3* is shifted to the right so that the teeth of member *f* engage those of member *d*, the clutch engages gear *4* and motion is transmitted from driving shaft *1* to driven shaft *5* through gears *2*, *7*, *8* and *4*. The transmission ratio, in this case, is

$$i_{15}=\frac{z_7}{z_2}\frac{z_4}{z_8}$$

where z_2, z_4, z_7 and z_8 are the numbers of teeth of gears *2*, *4*, *7* and *8*.

2844	TWO-SPEED GEARBOX MECHANISM	CxG SR

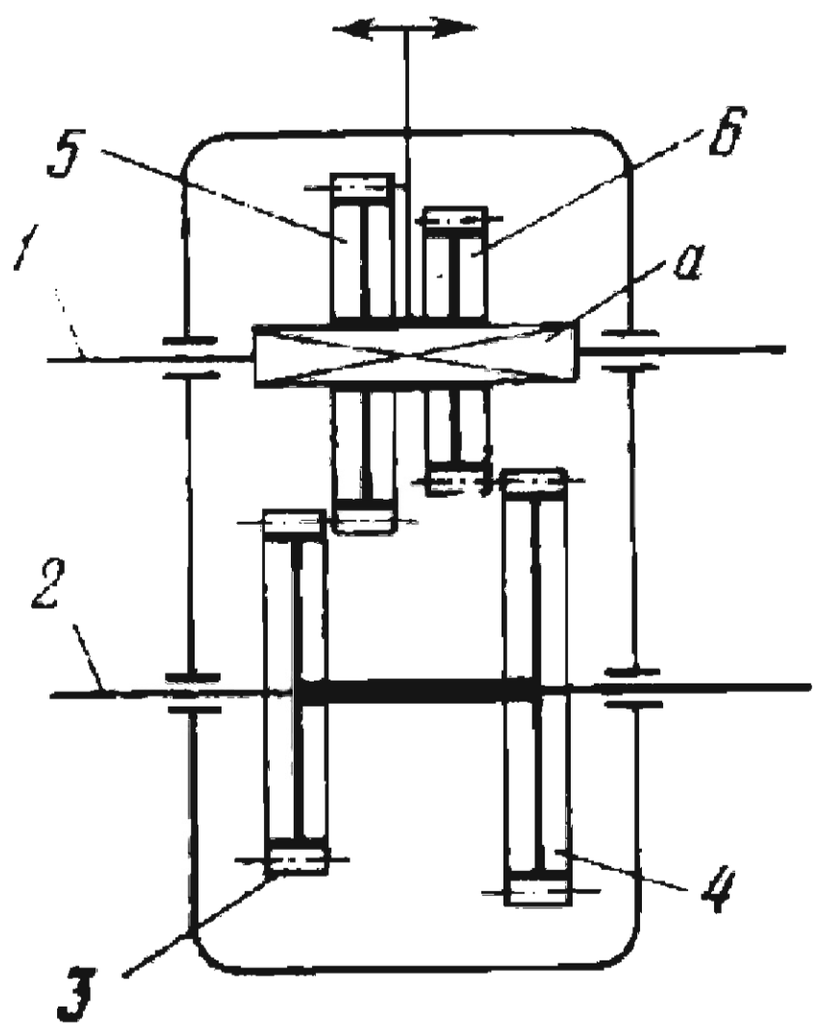

Rigidly attached (or integral) gears *5* and *6* slide along square guide *a* of shaft *1*. When driving shaft *1* rotates, driven shaft *2* can have either of two speeds depending on whether gear *5* meshes with gear *3* or gear *6* meshes with gear *4*. The corresponding transmission ratios are

$$i_{12} = -\frac{z_3}{z_5} \quad \text{and} \quad i_{12} = -\frac{z_4}{z_6}$$

where z_3, z_4, z_5 and z_6 are the numbers of teeth of gears *3*, *4*, *5* and *6*.

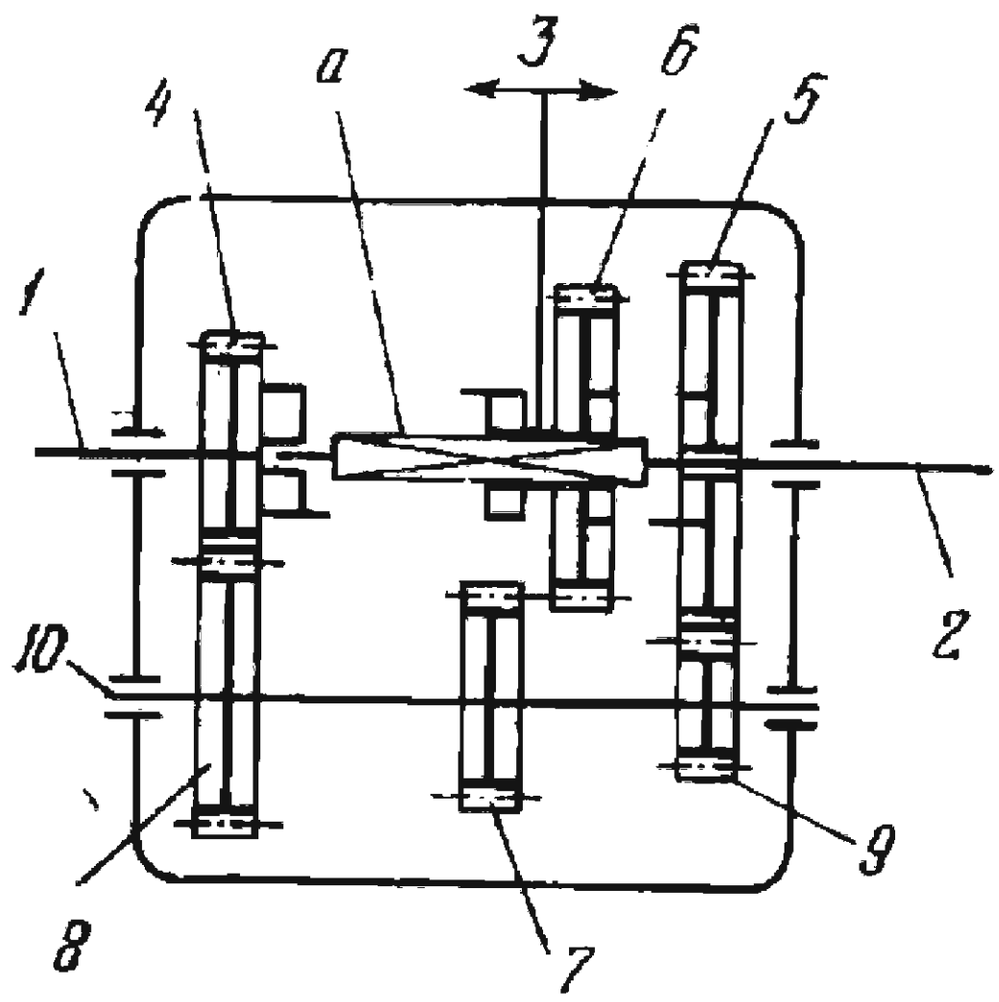

Clutch *3* with rigidly attached (or integral) gear *6* slides along square guide *a* of shaft *2*. In the neutral position clutch *3* is stationary when shaft *1* rotates. When clutch *3* is engaged to the clutch member of gear *4* (keyed to shaft *1*), shafts *1* and *2* rotate at the same speed in the same direction. Gears *8*, *7* and *9* are keyed to shaft *10*. Gears *8* and 9 are in constant engagement with gears *4* and *5*. When clutch *3* is engaged to the clutch member of gear *5* (freely mounted on shaft *2*), shafts *1* and *2* rotate in the same direction with the transmission ratio

$$i_{12}=\frac{z_8}{z_4}\frac{z_5}{z_9}$$

where z_4, z_5, z_8 and z_9 are the numbers of teeth of gears *4*, *5*, *8* and *9*. If gear *6* is shifted into mesh with gear *7*, shafts *1* and *2* rotate in the same direction with the transmission ratio

$$i_{12}=\frac{z_8}{z_4}\frac{z_6}{z_7}$$

where z_6 and z_7 are the numbers of teeth of gears *6* and *7*.

2846	TWO-SPEED GEARBOX MECHANISM	CxG SR

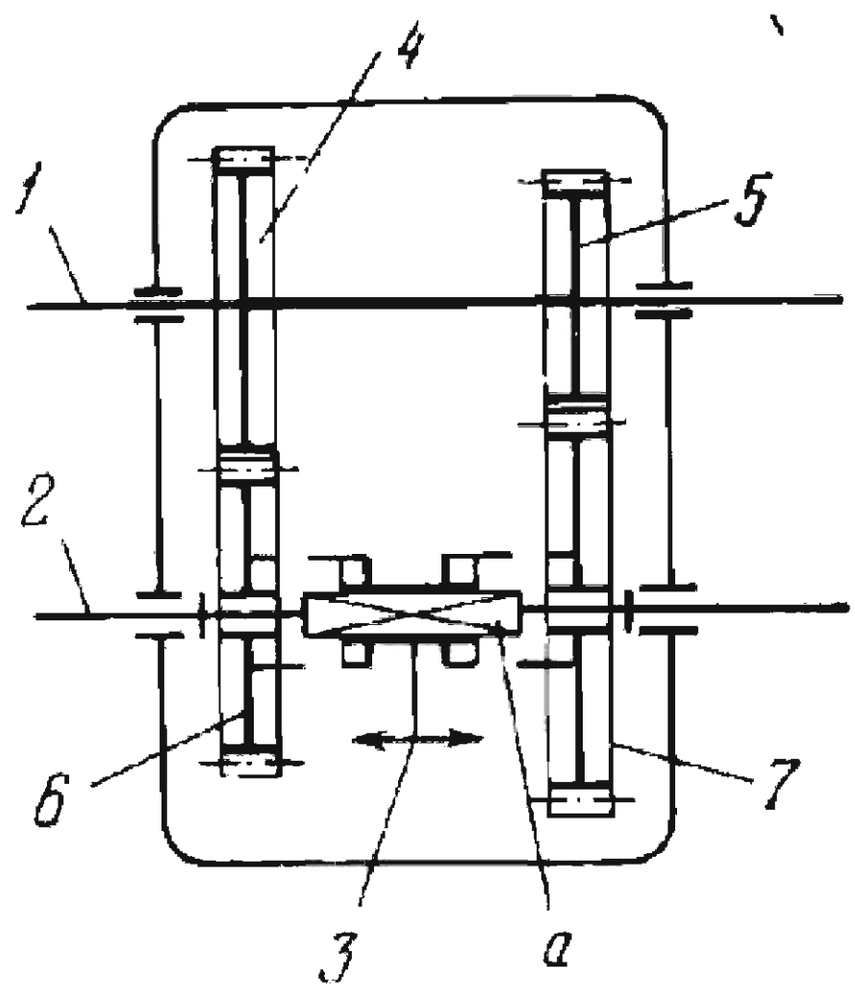

Clutch *3* slides along square guide *a* of shaft *2*. Gears *4* and *5* are keyed to shaft *1*; gears *6* and *7* rotate freely on shaft *2*. When driving shaft *1* rotates, driven shaft *2* can have either of two speeds depending upon whether clutch *3* is engaged to the clutch member of gear *6* or *7*. The corresponding transmission ratios are

$$i_{12} = -\frac{z_6}{z_4} \quad \text{and} \quad i_{12} = -\frac{z_7}{z_5}$$

where z_4, z_5, z_6 and z_7 are the numbers of teeth of gears *4*, *5*, *6* and *7*.

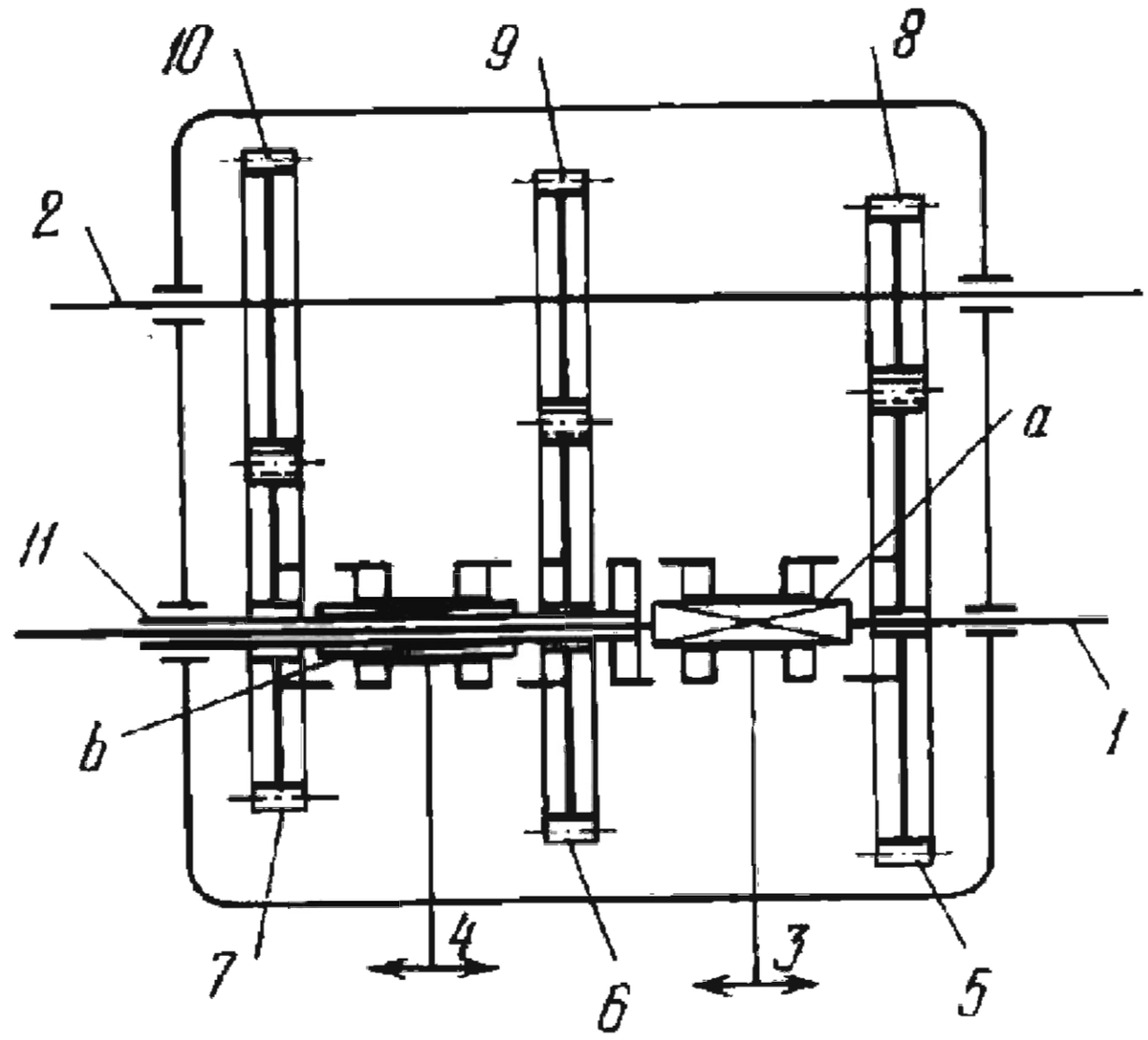

Clutch *3* slides along square guide *a* of shaft *1*. Clutch *4* slides along square guide *b* of hollow shaft *11*. Gears *8*, *9* and *10* are keyed to shaft *2* and are in constant engagement with gears *5*, *6* and *7* which rotate freely about shafts *1* and *11*. When driving shaft *1* rotates, driven shaft *2* can have any one of three speeds: for the first, clutch *4* is engaged to gear *7* and clutch *3* to hollow shaft *11*; for the second, clutch *4* is engaged to gear *6* and clutch *3* to hollow shaft *11*; and for the third, clutch *4* is in the neutral position and clutch *3* is engaged to gear *5*. The corresponding transmission ratios are

$$i_{12} = -\frac{z_{10}}{z_7}, \quad i_{12} = -\frac{z_9}{z_6} \quad \text{and} \quad i_{12} = -\frac{z_8}{z_5}$$

where z_5, z_6, z_7, z_8, z_9 and z_{10} are numbers of teeth of gears *5*, *6*, *7*, *8*, *9* and *10*.

2848	FOUR-SPEED GEARBOX MECHANISM WITH CLUTCHES ON THE INPUT AND OUTPUT SHAFTS	CxG SR

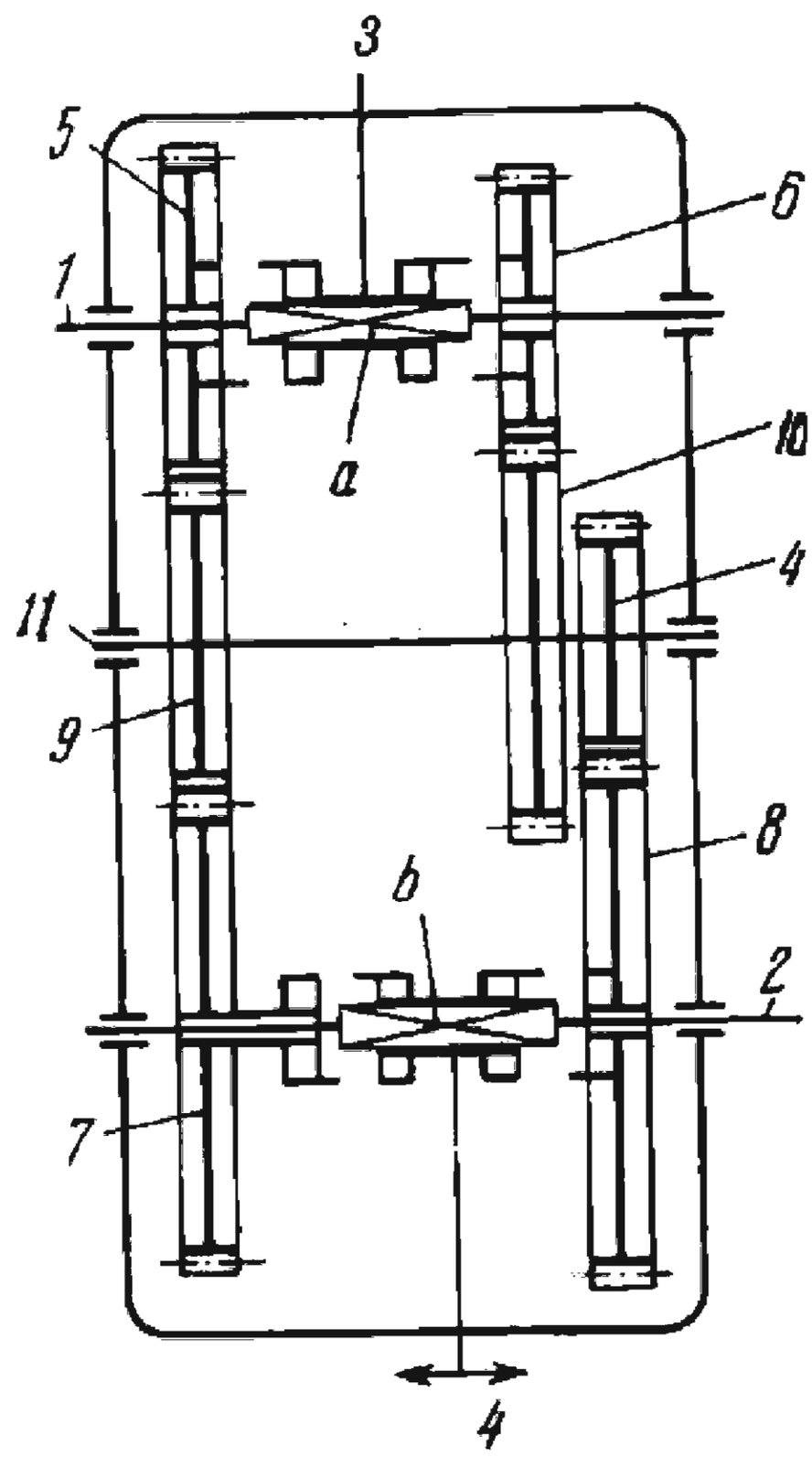

Clutches *3* and *4* slide along square guides *a* and *b* of shafts *1* and *2*. Gears *9*, *10* and *4* are keyed to intermediate shaft *11* and are in constant engagement with gears *5*, *7*, *6* and *8* which rotate freely about shafts *1* and *2*. When driving shaft *1* rotates, driven shaft *2* can have any one of four speeds for which clutches *3* and *4* are engaged at the same time to gears *5* and *7*, or gears *5* and *8*, or gears *6* and *7*, or gears *6* and *8*. The corresponding transmission ratios are

$$i_{12}=\frac{z_7}{z_5}, \qquad i_{12}=\frac{z_9}{z_5}\,\frac{z_8}{z_4}, \qquad i_{12}=\frac{z_{10}}{z_6}\,\frac{z_7}{z_9} \quad \text{and}$$

$$i_{12}=\frac{z_{10}}{z_6}\,\frac{z_8}{z_4}$$

where z_4, z_5, z_6, z_7, z_8, z_9 and z_{10} are the numbers of teeth of gears *4*, *5*, *6*, *7*, *8*, *9* and *10*.

2849	THREE-SPEED GEARBOX MECHANISM	CxG SR

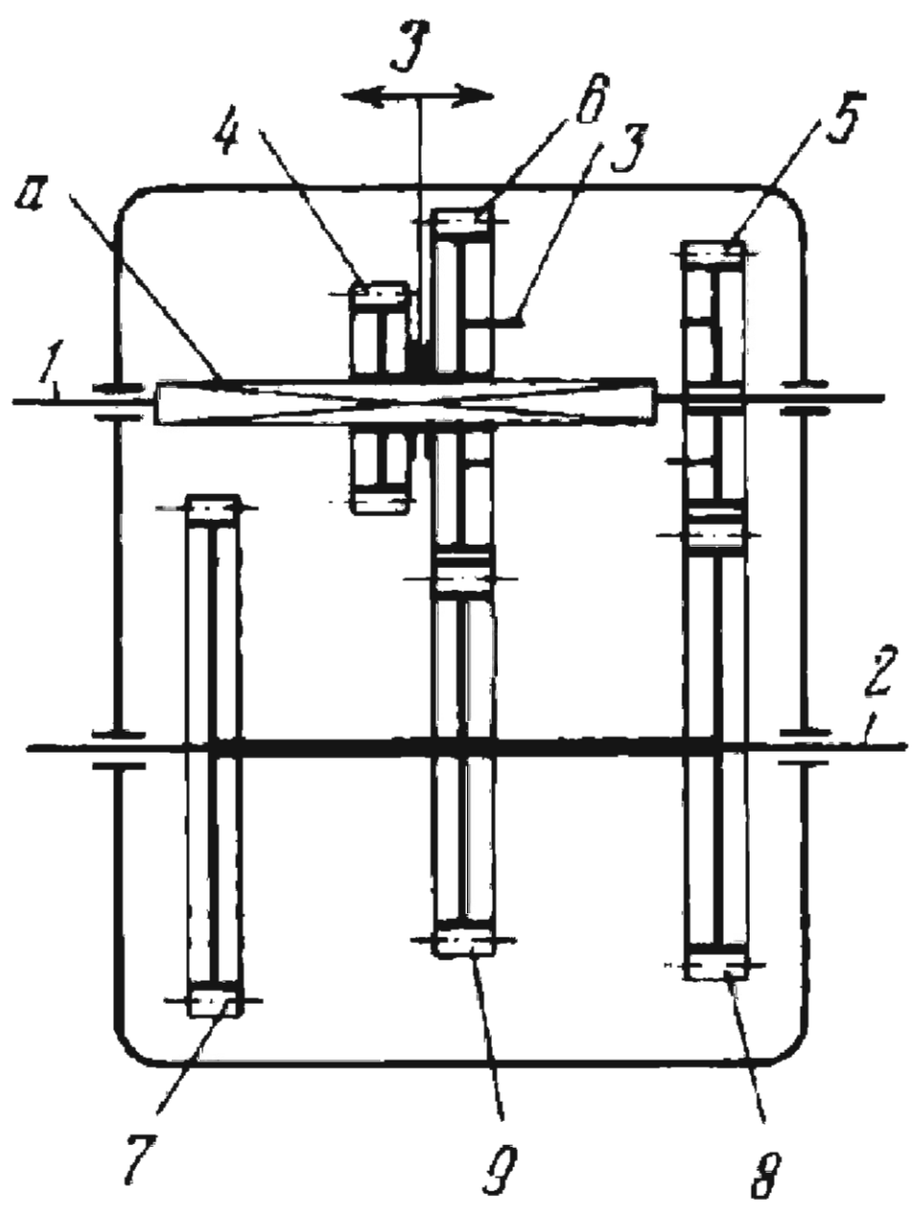

Rigidly attached gears *4* and *6* slide along square guide *a* of shaft *1*. Clutch member *3* is rigidly attached to (or integral with) gear *6*. Gears *7*, *9* and *8* are keyed to shaft *2*. Gear *8* is in constant engagement with gear *5* which rotates freely about shaft *1*. When driving shaft *1* rotates, driven shaft *2* can have any one of three speeds: for the first, gear *4* is shifted into engagement with gear *7*; for the second, gear *6* is shifted into engagement with gear *9*; and for the third, clutch member *3* is engaged to gear *5*. The corresponding transmission ratios are

$$i_{12} = -\frac{z_7}{z_4}, \qquad i_{12} = -\frac{z_9}{z_6} \quad \text{and} \quad i_{12} = -\frac{z_8}{z_5}$$

where z_4, z_5, z_6, z_7, z_8 and z_9 are the numbers of teeth of gears *4*, *5*, *6*, *7*, *8* and *9*.

2850	FOUR-SPEED GEARBOX MECHANISM WITH CLUTCHES ON THE INPUT AND INTERMEDIATE SHAFTS	CxG SR

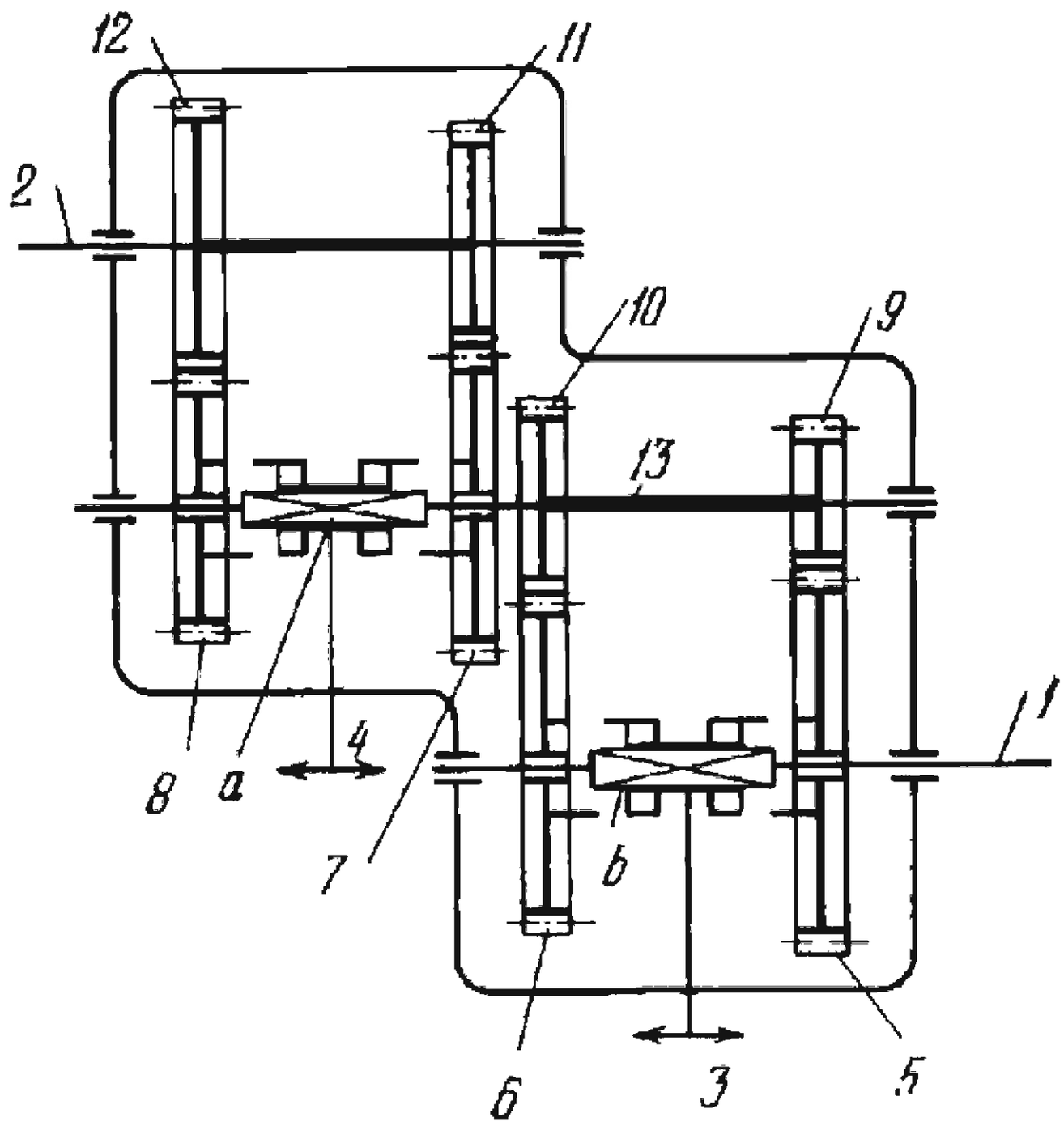

Clutch *3* slides along square guide *b* of shaft *1*; clutch *4* slides along square guide *a* of intermediate shaft *13*. Gears *12* and *11* are keyed to shaft *2* and are in constant engagement with gears *8* and *7* which rotate freely about shaft *13*. Gears *10* and *9* are keyed to shaft *13* and are in constant engagement with gears *6* and *5* which rotate freely about shaft *1*. When driving shaft *1* rotates, driven shaft *2* can have any one of four speeds for which clutches *3* and *4* are engaged at the same time to gears *5* and *7*, or gears *5* and *8*, or gears *6* and *7*, or gears *6* and *8*. The corresponding transmission ratios are

$$i_{12}=\frac{z_9}{z_5}\,\frac{z_{11}}{z_7}, \qquad i_{12}=\frac{z_9}{z_5}\,\frac{z_{12}}{z_8},$$

$$i_{12}=\frac{z_{10}}{z_6}\,\frac{z_{11}}{z_7} \quad \text{and} \quad i_{12}=\frac{z_{10}}{z_6}\,\frac{z_{12}}{z_8}$$

where z_5, z_6, z_7, z_8, z_9, z_{10}, z_{11} and z_{12} are the numbers of teeth of gears *5*, *6*, *7*, *8*, *9*, *10*, *11* and *12*.

2851	FOUR-SPEED GEARBOX MECHANISM WITH CLUTCHES ON THE INPUT AND OUTPUT SHAFTS	CxG SR

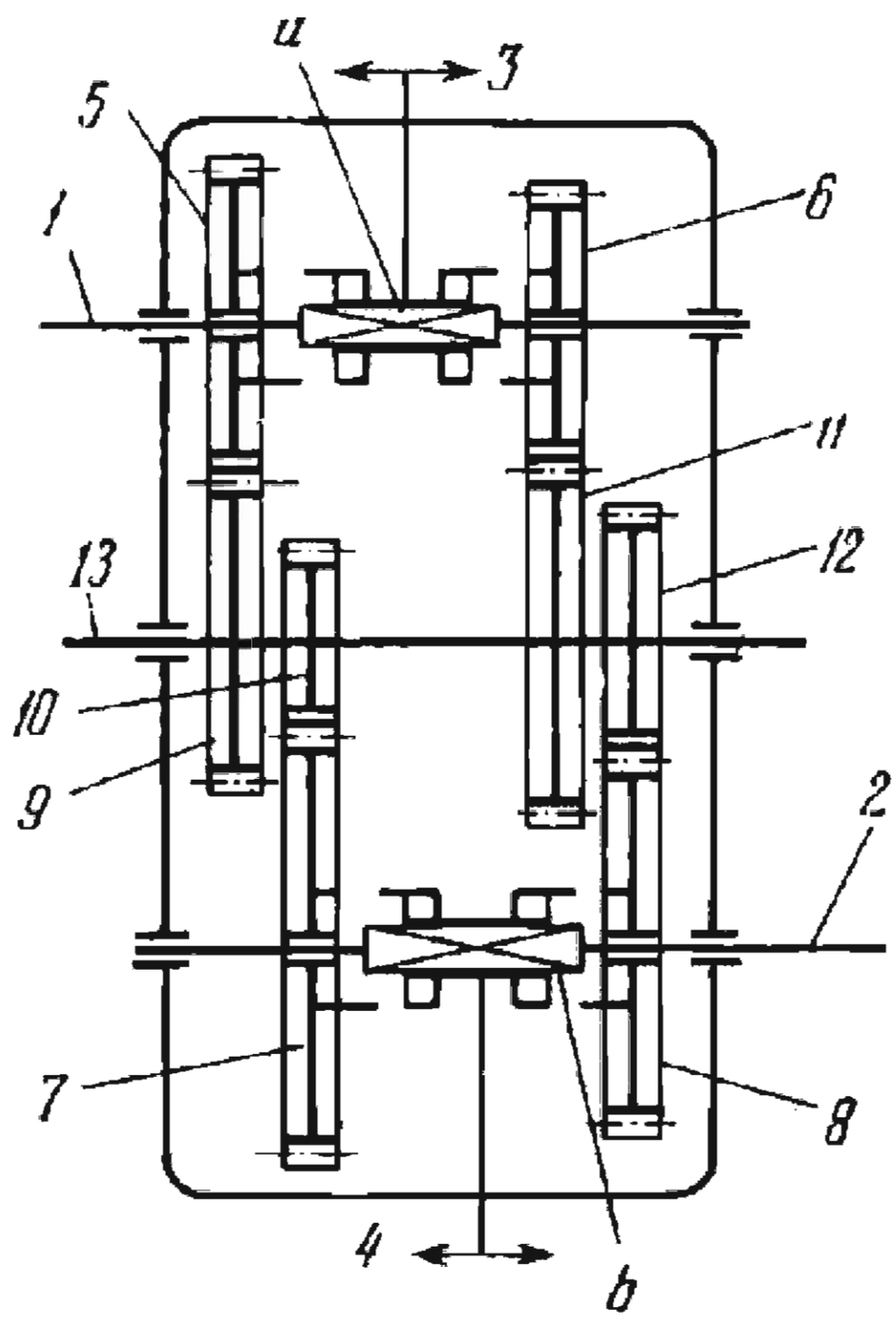

Clutches *3* and *4* slide along square guides *a* and *b* of input and output shafts *1* and *2*. Gears *9*, *10*, *11* and *12* are keyed to intermediate shaft *13* and are in constant engagement with gears *5*, *7*, *6* and *8* which rotate freely on shafts *1* and *2*. When driving shaft *1* rotates, driven shaft *2* can have any one of four speeds for which clutches *3* and *4* are engaged at the same time to gears *5* and *7*, or gears *5* and *8*, or gears *6* and *7*, or gears *6* and *8*. The corresponding transmission ratios are

$$i_{12}=\frac{z_9}{z_5}\frac{z_7}{z_{10}}, \qquad i_{12}=\frac{z_9}{z_5}\frac{z_8}{z_{12}},$$

$$i_{12}=\frac{z_{11}}{z_6}\frac{z_7}{z_{10}} \quad \text{and} \quad i_{12}=\frac{z_{11}}{z_6}\frac{z_8}{z_{12}}$$

where z_5, z_6, z_7, z_8, z_9, z_{10}, z_{11} and z_{12} are the numbers of teeth of gears *5*, *6*, *7*, *8*, *9*, *10*, *11* and *12*.

2852	FOUR-SPEED GEARBOX MECHANISM WITH CLUTCHES ON THE INPUT SHAFT	CxG SR

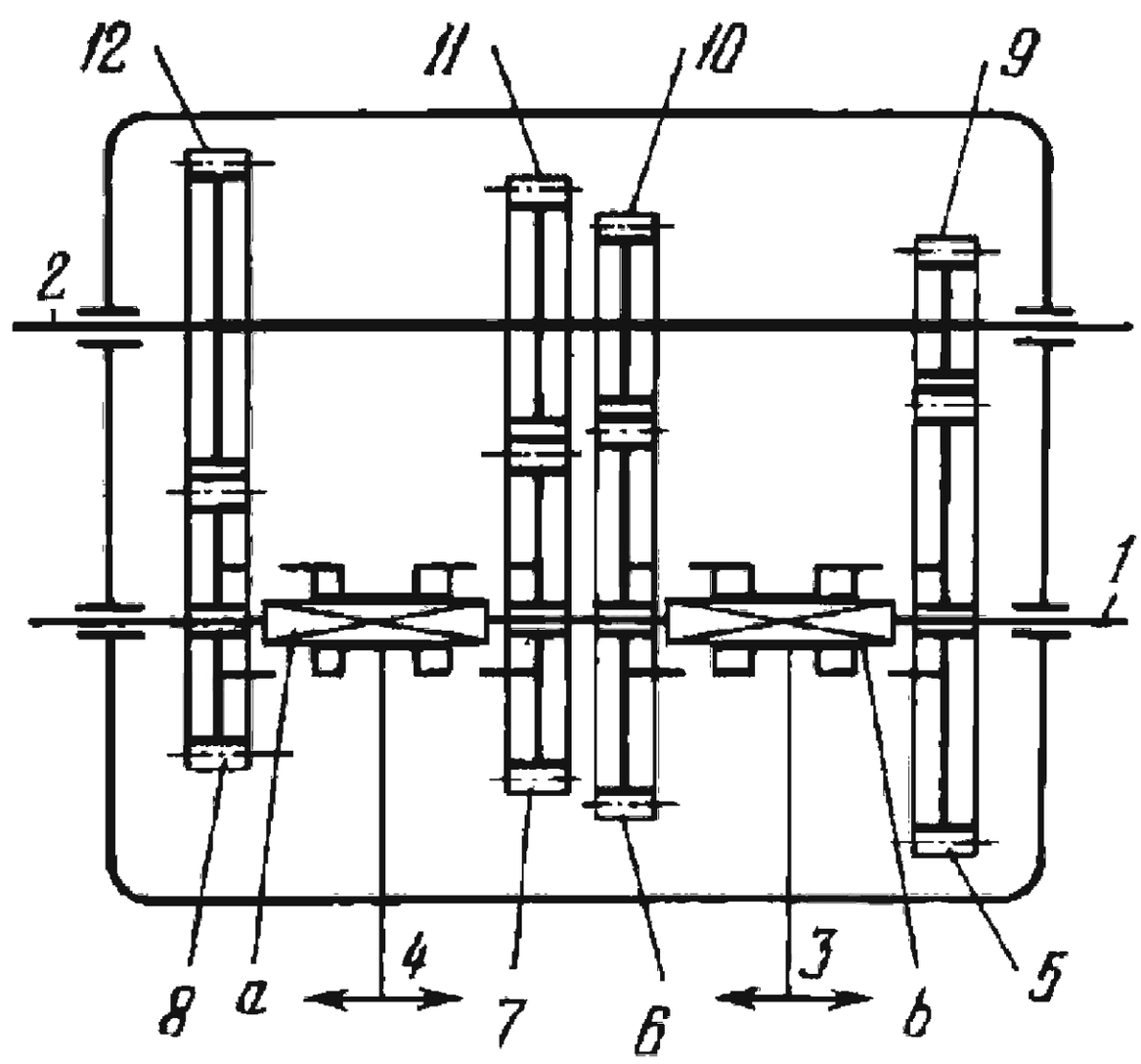

Clutches *4* and *3* slide along square guides *a* and *b* of input shaft *1*. Gears *9*, *10*, *11* and *12* are keyed to output shaft *2* and are in constant engagement with gears *5*, *6*, *7* and *8* which rotate freely about shaft *1*. When driving shaft *1* rotates, driven shaft *2* can have any one of four speeds for which clutch *3* is engaged to either gear *5* or *6* with clutch *4* in the neutral position, or clutch *4* is engaged to either gear *7* or *8* with clutch *3* in the neutral position. The corresponding transmission ratios are

$$i_{12} = -\frac{z_9}{z_5}, \qquad i_{12} = -\frac{z_{10}}{z_6},$$

$$i_{12} = -\frac{z_{11}}{z_7} \quad \text{and} \quad i_{12} = -\frac{z_{12}}{z_8}.$$

where z_5, z_6, z_7, z_8, z_9, z_{10}, z_{11} and z_{12} are the numbers of teeth of gears *5*, *6*, *7*, *8*, *9*, *10*, *11* and *12*.

2853	FOUR-SPEED REVERSIBLE GEARBOX MECHANISM WITH A CLUTCH ON THE INPUT SHAFT	CxG SR

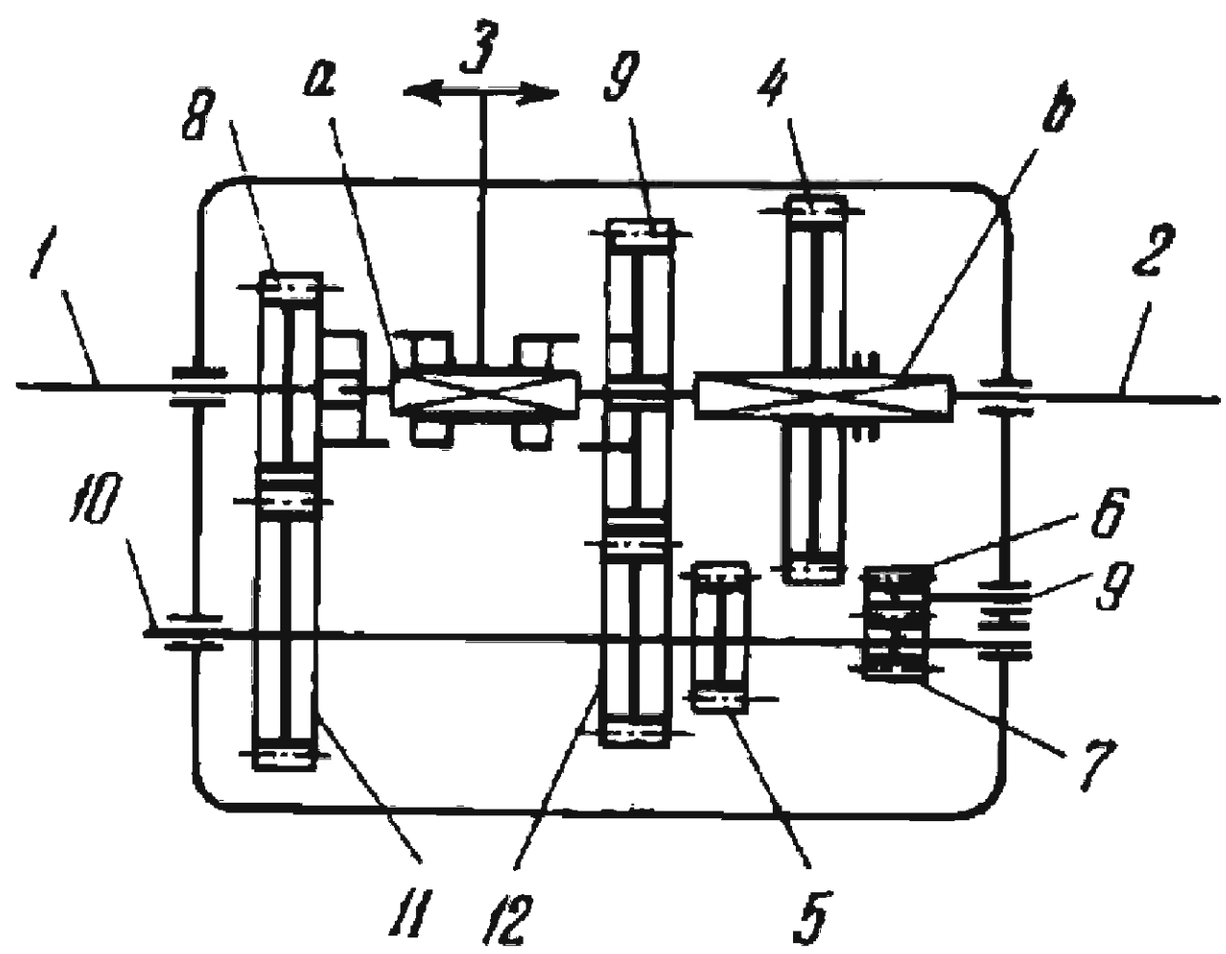

Gear *8* is keyed to input shaft *1* and is in constant engagement with gear *11*. Clutch *3* slides along square guide *a* of output shaft *2*. Gear *9* rotates freely on shaft *2* and is in constant engagement with gear *12*. Gear *4* slides along square guide *b* of shaft *2* and can be shifted into engagement with either gear *5* or *6*. Gear *6* rotates freely about intermediate shaft *9* and is in constant engagement with gear *7*. Gears *7*, *5*, *12* and *11* are keyed to shaft *10*. When driving shaft *1* rotates, driven shaft *2* can have any one of three speeds for which clutch *3* is engaged either to gear *8* or *9* with gear *4* disengaged, or gear *4* is shifted into engagement with gear *5* with clutch *3* in the neutral position. The corresponding transmission ratios are

$$i_{12}=1, \quad i_{12}=\frac{z_{11}}{z_8}\frac{z_9}{z_{12}} \quad \text{and} \quad i_{12}=\frac{z_{11}}{z_8}\frac{z_4}{z_5}.$$

If gear *4* is shifted into engagement with gear *6*, then the fourth transmission ratio is

$$i_{12}=-\frac{z_{11}}{z_8}\frac{z_4}{z_7}$$

where z_4, z_5, z_7, z_8, z_9, z_{11} and z_{12} are the numbers of teeth of gears *4*, *5*, *7*, *8*, *9*, *11* and *12*. Shaft *2* is reversed by the engagement for the fourth speed. Thus shaft *2* has three forward speeds and one reverse speed.

2854	FOUR-SPEED REVERSIBLE GEARBOX MECHANISM WITH BRAKE DRUMS	CxG SR

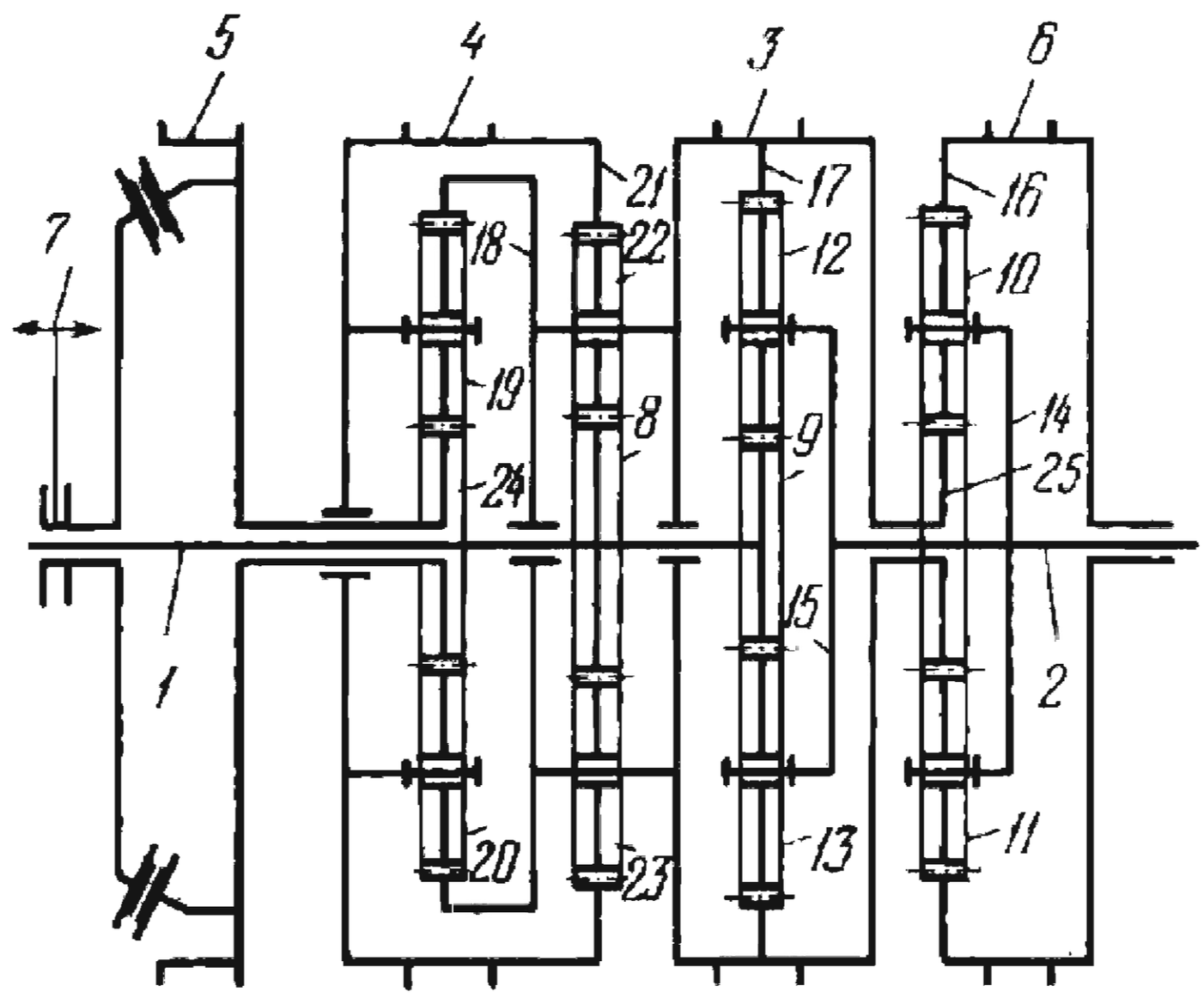

Gears *8* and *9* are keyed to driving shaft *1*. Carriers *14* and *15* are keyed to driven shaft *2*. Planetary gears *10* and *11* are of equal diameter and rotate freely on the symmetrically located studs of carrier *14*. Planetary gears *12* and *13* are of equal diameter and rotate freely on the symmetrically located studs of carrier *15*. Internal gear *16* is rigidly attached to brake drum *6* and meshes with planetary gears *10* and *11*. Rigidly attached to brake drum *3* are internal gear *17* which meshes with planetary gears *12* and *13*, sun gear *25* which meshes with planetary gears *10* and *11*, and internal gear *18* which meshes with planetary gears *19* and *20* of equal diameter. Rigidly attached to brake drum *4* is internal gear *21* which meshes with planetary gears *22* and *23*. Planetary gears *22* and *23* rotate freely on symmetrically located pins carried by drum *3* and mesh with sun gear *8*; planetary gears *19* and *20* rotate freely on symmetrically located pins carried by drum *4*. Sun gear *24* is rigidly attached to brake drum *5* and meshes with planetary gears *19* and *20*. Clutch *7* brakes drum *5*. When driving shaft *1* rotates, driven shaft *2* can have any one of four forward speeds obtained by braking drum *3*, *4* or *5*, or engaging clutch *7*, or one reverse speed obtained by braking drum *6*.

2855	FOUR-SPEED REVERSIBLE GEARBOX MECHANISM WITH A CLAW CLUTCH	CxG SR

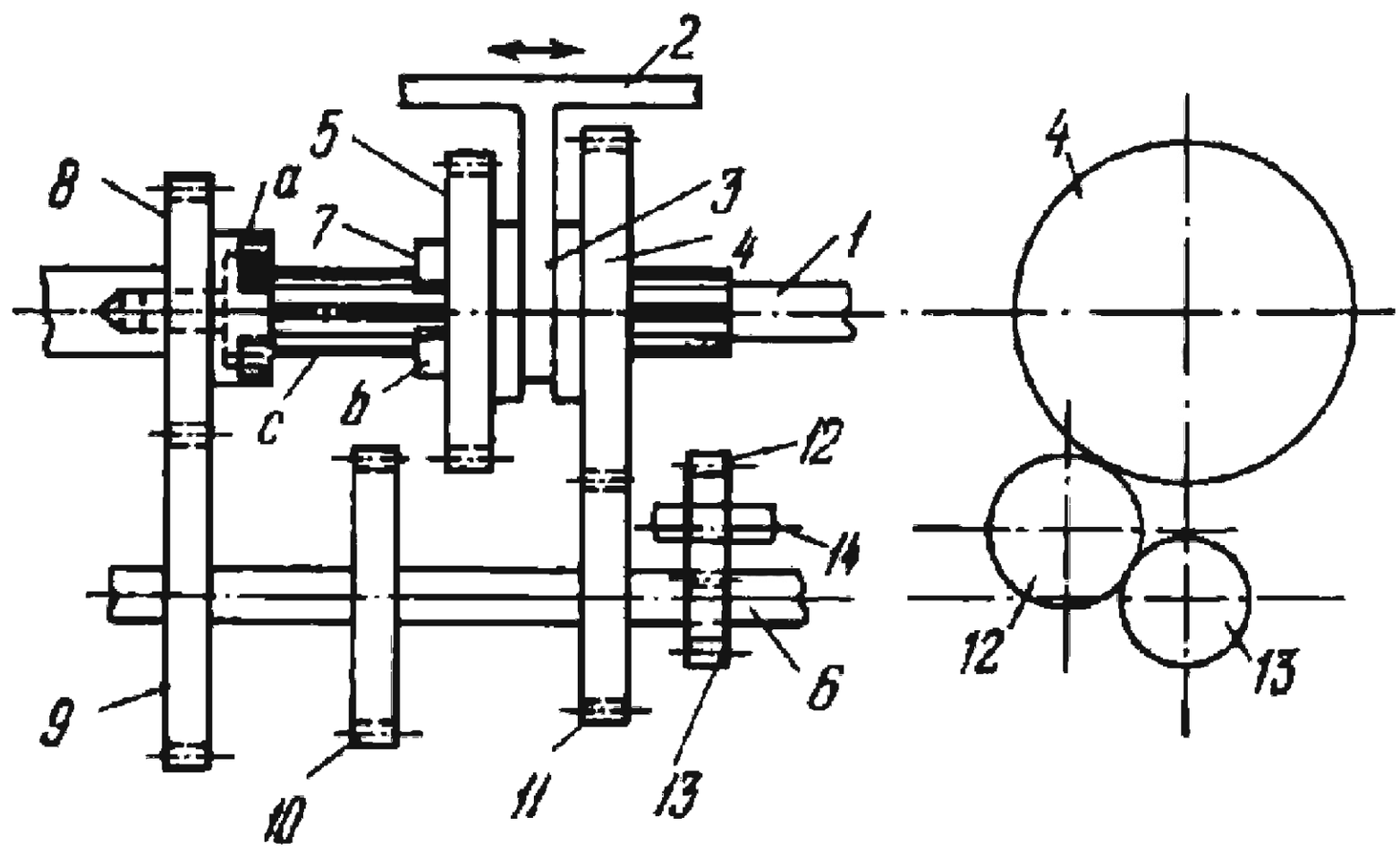

Gear *8* rotates freely on shaft *1* and has clutch teeth *a* which can engage teeth *b* of clutch member *7* at the left end of sleeve *3*. Sleeve *3* slides along splines *c* of shaft *1* and is integral with gears *4* and *5*. Gears *9*, *10*, *11* and *13* are keyed to shaft *6*. Gears *8* and *9* are in constant engagement. When lever *2* is shifted to the extreme left, teeth *b* of clutch member *7* are engaged to teeth *a* of gear *8* so that rotation is transmitted to shaft *6* through gears *8* and *9* with the transmission ratio

$$i_{16} = -\frac{z_9}{z_8}$$

where z_8 and z_9 are the numbers of teeth of gears *8* and *9*. When gear *4* is shifted into engagement with gear *11*, or gear *5* into engagement with gear *10*, the corresponding transmission ratios are

$$i_{16} = -\frac{z_{11}}{z_4} \quad \text{and} \quad i_{16} = -\frac{z_{10}}{z_5}$$

where z_4, z_5, z_{10} and z_{11} are the numbers of teeth of gears *4*, *5*, *10* and *11*. When lever *2* is shifted to the extreme right, gear *4* is brought into engagement with gear *12* which rotates freely about intermediate shaft *14* and is in constant engagement with gear *13*. The axis of shaft *14* is not in the plane passing through the axes of shafts *1* and *6*. The fourth transmission ratio is

$$i_{16} = \frac{z_{13}}{z_4}$$

and shaft *6* is reversed by this engagement. Thus driven shaft *6* has three forward speeds and one reverse speed.

2856	GEARBOX MECHANISM OF A REVERSING AND DISENGAGING CLUTCH WITH A BRAKE DRUM	CxG SR

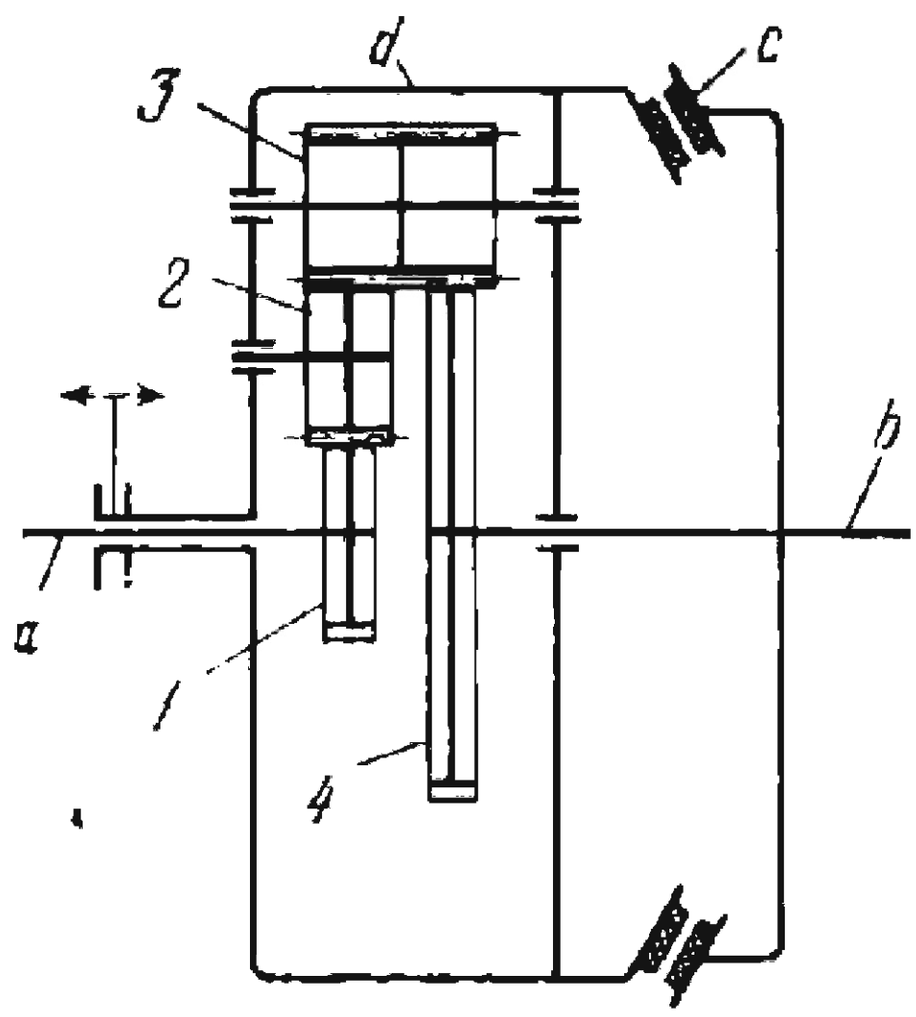

Rotation is transmitted from driving shaft *a* through gears *1*, *2*, *3* and *4* to driven shaft *b*. Gears *1* and *4* are keyed on shafts *a* and *b*. Gears *2* and *3* rotate freely on studs carried by drum housing *d*. Clutch member *c* is keyed to shaft *b*. When clutch *c* is engaged and brake drum *d* is released, shafts *a* and *b* rotate at the same speed and in the same direction. When clutch *c* is engaged and drum *d* is braked, shafts *a* and *b* rotate in opposite directions with the transmission ratio

$$i_{ab} = -\frac{z_4}{z_1}$$

where z_1 and z_4 are the numbers of teeth of gears *1* and *4*. When clutch *c* is disengaged and drum *d* is released, planetary gears *2* and *3* roll around sun gears *1* and *4*, and shaft *b* is stationary if a resisting torque is applied to it.

2857	FIVE-SPEED GEARBOX MECHANISM WITH A GEAR CONE AND TUMBLER GEAR	CxG SR

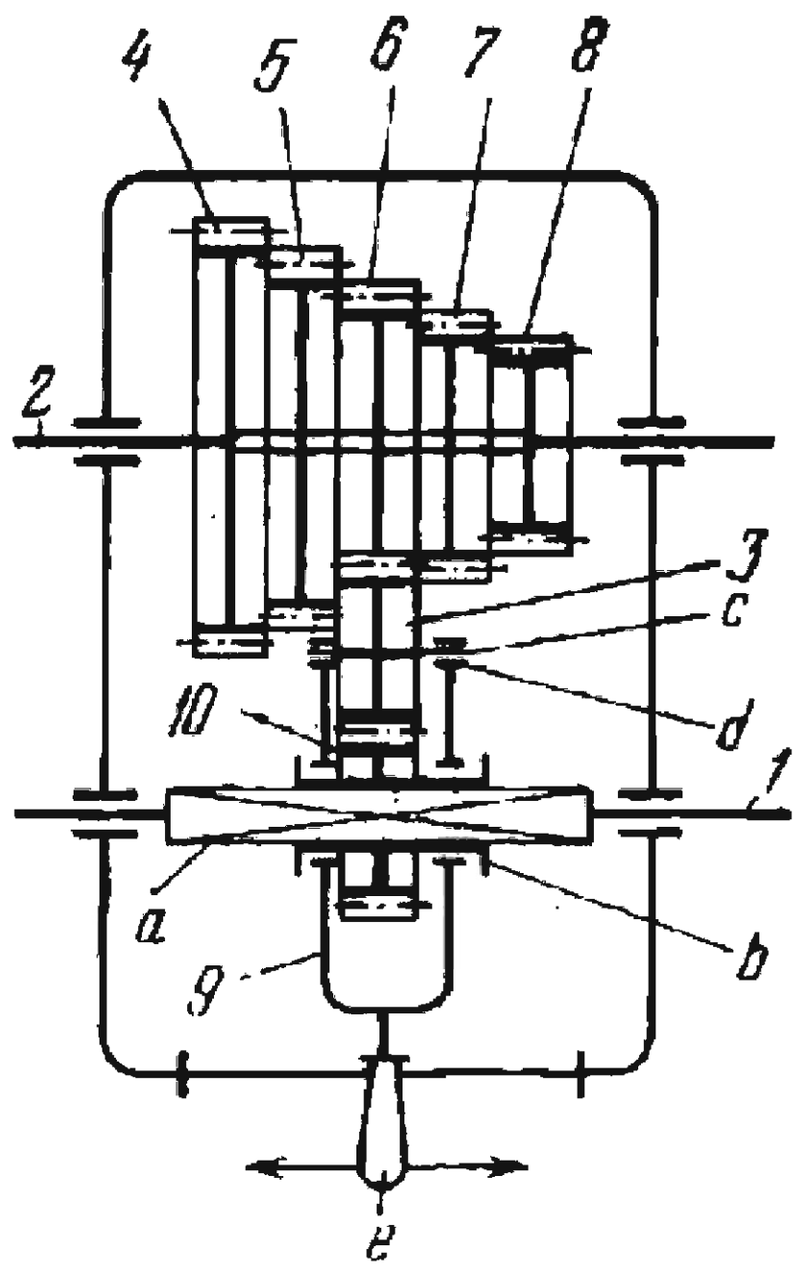

Tumbler gear arm *9* turns about the axis of cylindrical slider *b* which can be shifted axially along square guide *a* of shaft *1*. Pinion *10* is rigidly attached to (or integral with) slider *b* and meshes with tumbler gear *3* which is mounted on stud *c* that rotates in bearings *d* of arm *9*. Tumbler gear *3* can be brought into engagement with any one of cone gears *4*, *5*, *6*, *7* and *8* which are keyed to shaft *2*. This is accomplished by turning arm *9* with handle *e* and shifting it along shaft *1* to the required cone gear. The transmission ratio for the position shown is

$$i_{12}=\frac{z_6}{z_{10}}$$

where z_6 and z_{10} are the numbers of teeth of gears *6* and *10*. When driving shaft *1* rotates, driven shaft *2* can have any one of five speeds depending on which cone gear is meshing with the tumbler gear.

2858	FIVE-SPEED REVERSIBLE GEARBOX MECHANISM	CxG SR

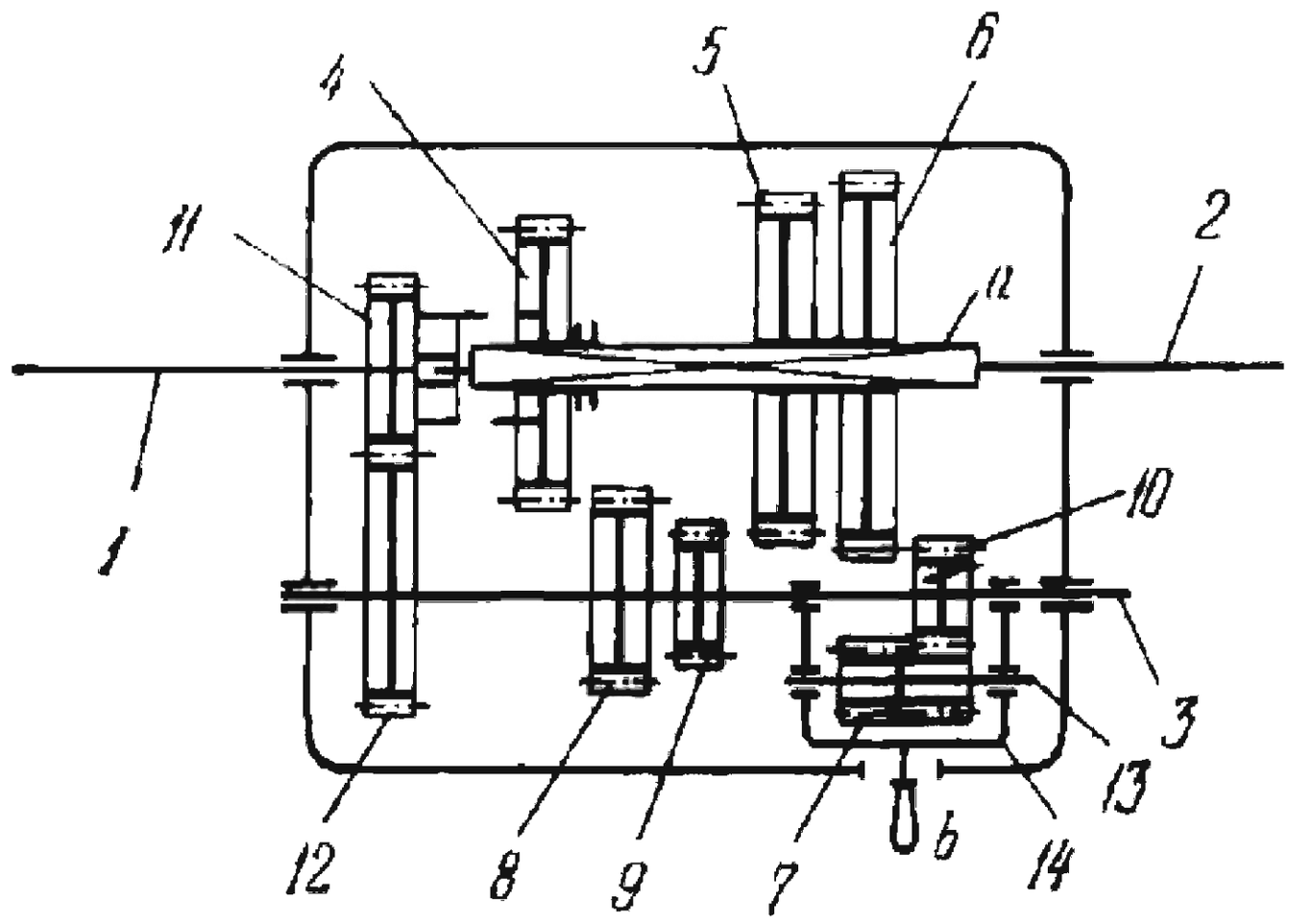

Gear *11* is keyed to shaft *1*. Gears *4*, *5* and *6* can be shifted along square guide *a* of shaft *2*. Gears *12*, *8*, *9* and *10* are keyed to intermediate shaft *3*. Three different transmission ratios can be obtained by shifting gear *4* into engagement with gear *8*, or gear *5* with gear *9*, or gear *6* with gear *10*. Thus

$$i_{12}=\frac{z_{12}}{z_{11}}\frac{z_4}{z_8}, \qquad i_{12}=\frac{z_{12}}{z_{11}}\frac{z_5}{z_9} \quad \text{and} \quad i_{12}=\frac{z_{12}}{z_{11}}\frac{z_6}{z_{10}}.$$

Tumbler gear arm *14* turns freely about the axis of shaft *3* and carries tumbler gear *7*, which is keyed to intermediate shaft *13* and in constant engagement with gear *10*. By turning handle *b* of arm *14*, tumbler gear *7* can be brought into engagement with gear *6*. Then the transmission ratio is

$$i_{12}=-\frac{z_{12}}{z_{11}}\frac{z_6}{z_{10}}$$

so that shaft *2* is reversed. When gear *4* is shifted to the left so that its clutch member engages that of gear *11*, the transmission ratio is $i_{12}=1$. When driving shaft *1* rotates, driven shaft *2* can have any of four forward speeds, or one reverse speed.

2859	FIVE-SPEED GEARBOX MECHANISM WITH TWO GEAR CONES AND A SLANTING GUIDE	CxG SR

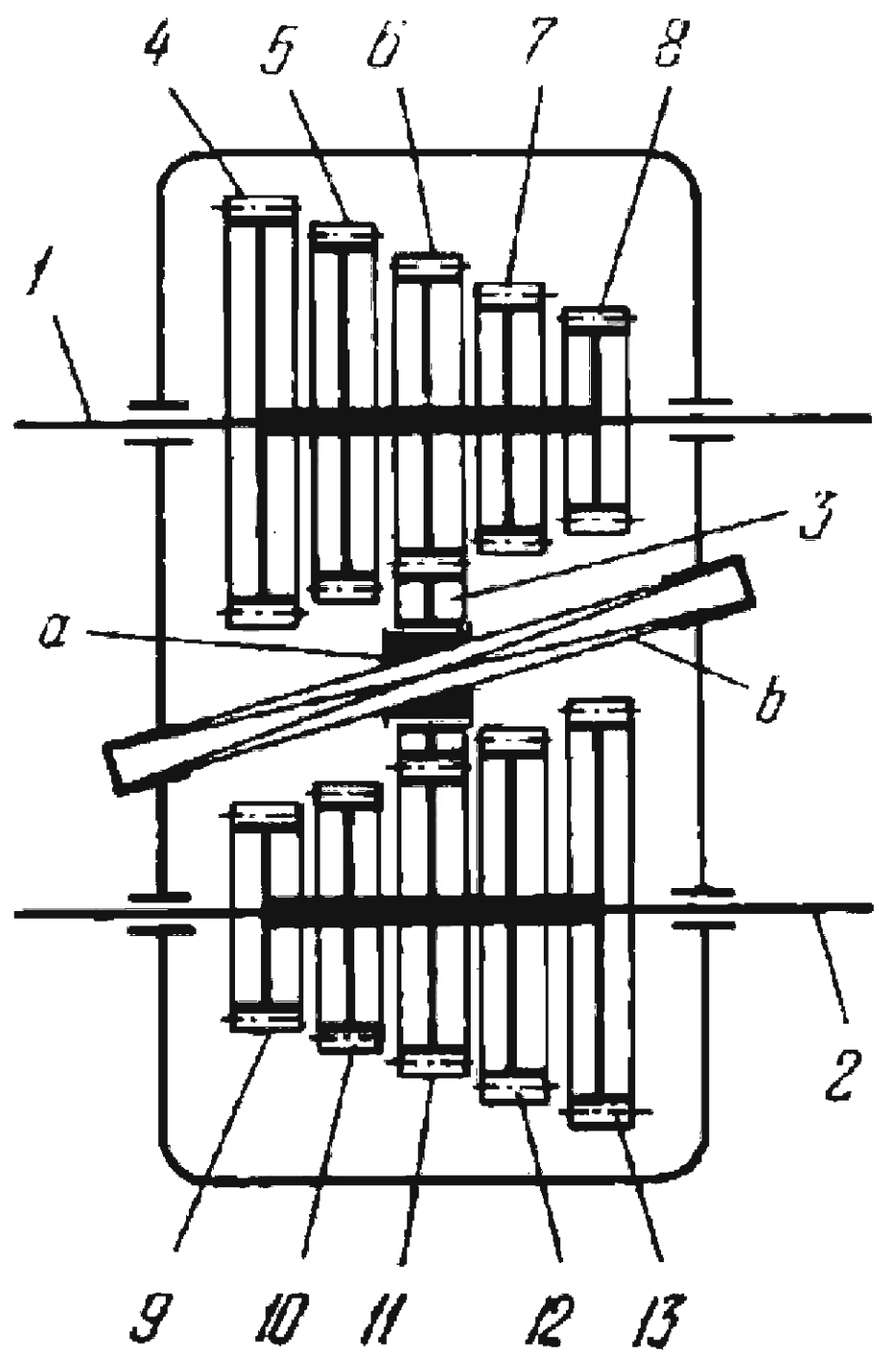

Idler gear *3* rotates about the axis of cylindrical slider *a* which can be shifted along slanted square guide *b*. Cone gears *4*, *5*, *6*, *7* and *8* are keyed to shaft *1*; cone gears *9*, *10*, *11*, *12* and *13* are keyed to shaft *2*. The sum of the pitch radii is the same for all the pairs of opposing gears. By shifting idler gear *3* along guide *b* it can be brought into engagement with any pair of opposing gears. The transmission ratio for the position shown is

$$i_{12}=\frac{z_{11}}{z_6}$$

where z_6 and z_{11} are the numbers of teeth of gears *6* and *11*. When driving shaft *1* rotates, driven shaft *2* can have any one of five speeds depending upon which pair of gears, *4* and *9*, *5* and *10*, *6* and *11*, *7* and *12*, or *8* and *13*, idler gear *3* is in engagement with.

2860	FIVE-SPEED GEARBOX MECHANISM WITH INTERMESHING GEAR CONES AND A SLIDING KEY	CxG SR

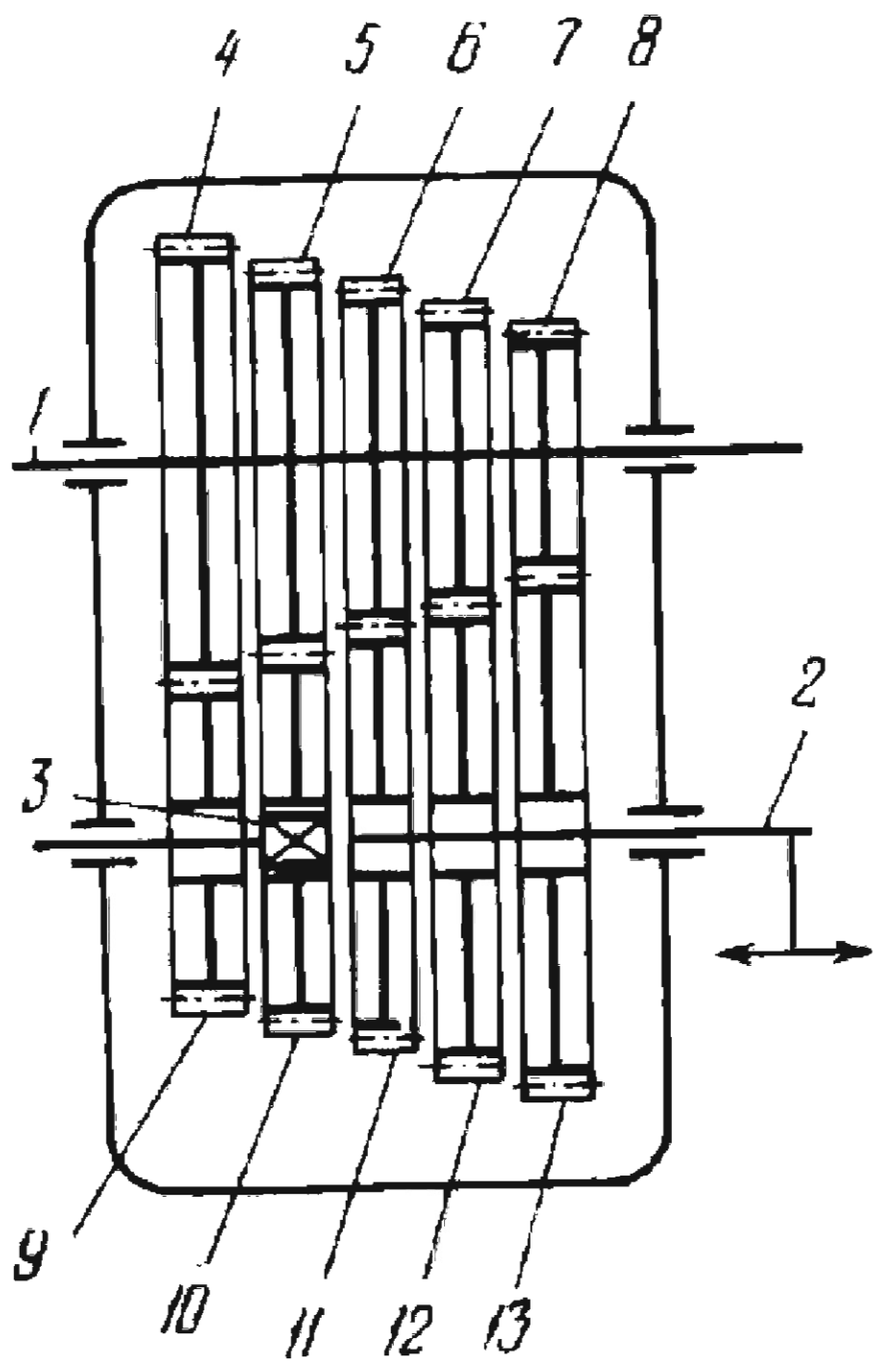

Gears *4*, *5*, *6*, *7* and *8* are keyed to shaft *1*, and are in constant engagement with gears *9*, *10*, *11*, *12* and *13* which rotate freely about shaft *2*. Sliding key *3* can be shifted along shaft *2*, keying one of the gears to this shaft. The sum of the pitch radii is the same for all the pairs of meshing cone gears. The transmission ratio for the position of key *3* shown is

$$i_{12} = -\frac{z_{10}}{z_5}$$

where z_5 and z_{10} are the numbers of teeth of gears *5* and *10*. When driving shaft *1* rotates, driven shaft *2* can have any one of five speeds depending on which gear, *9*, *10*, *11*, *12* or *13*, is engaged by key *3*.

2861	SIX-SPEED GEARBOX MECHANISM WITH A CLUTCH ON THE OUTPUT SHAFT	CxG SR

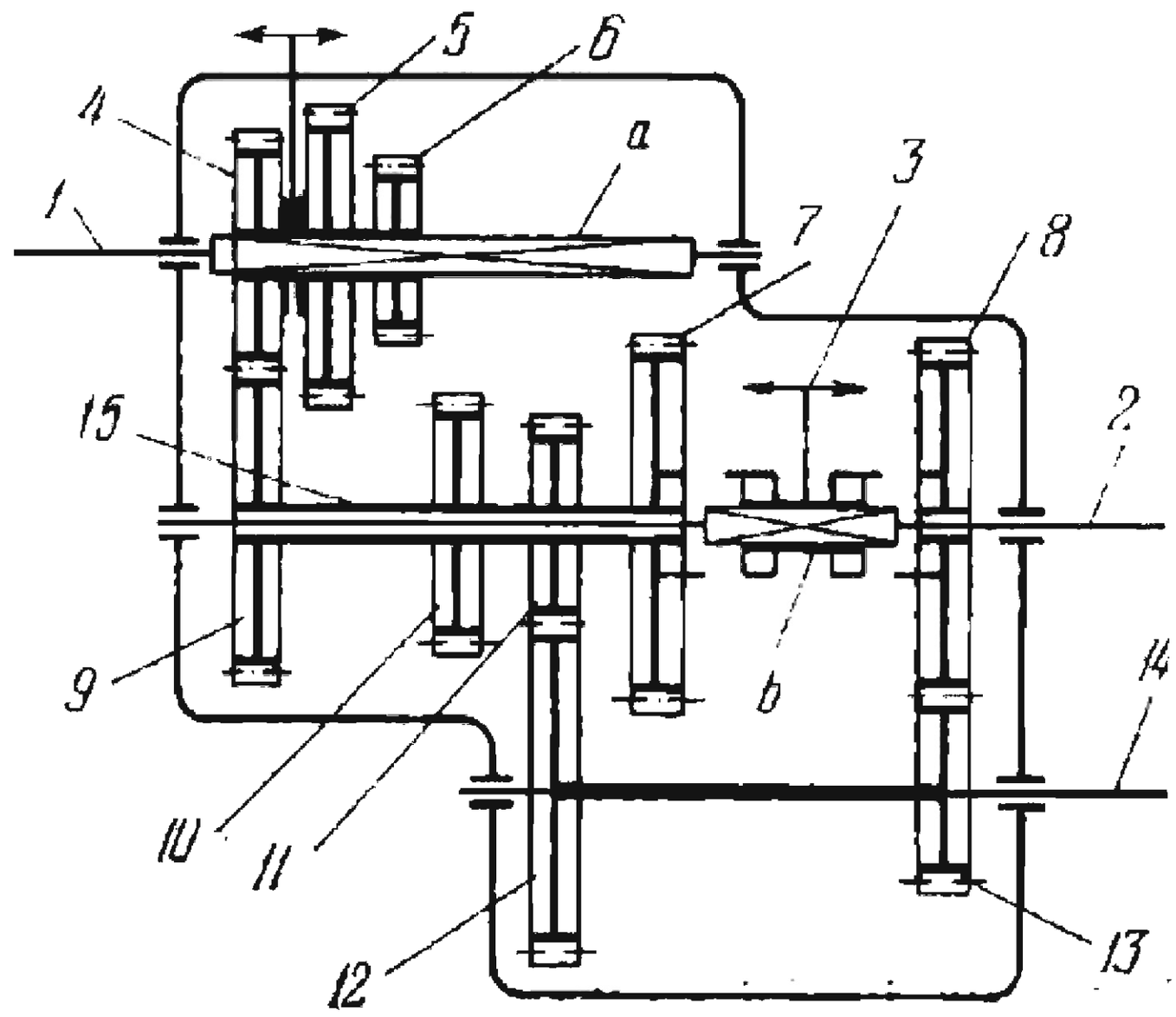

A cluster of three gears, *4*, *5* and *6*, slides along square guide *a* of shaft *1*, and can be shifted into engagement with gears *9*, *10* and *7* which are keyed, together with gear *11*, to sleeve *15*. Sleeve *15* rotates freely about shaft *2*. Gears *12* and *13* are keyed to intermediate shaft *14* and are in constant engagement with gears *11* and *8*. Gear *8* rotates freely on shaft *2*. Clutch *3* slides along square guide *b* of shaft *2* and can be shifted into engagement with the clutch members of either gear *7* or *8*. If gears *4* and *9* are in engagement and clutch *3* is engaged to gear *7*, the transmission ratio is

$$i_{12} = -\frac{z_9}{z_4}.$$

If clutch *3* is shifted into engagement with gear *8*, the transmission ratio is changed to

$$i_{12} = -\frac{z_9}{z_4}\,\frac{z_{12}}{z_{11}}\,\frac{z_8}{z_{13}}.$$

Correspondingly, if gear *5* is shifted into engagement with gear *10*, the two engagements of clutch *3* provide the transmission ratios

$$i_{12} = -\frac{z_{10}}{z_5} \quad \text{and} \quad i_{12} = -\frac{z_{10}}{z_5}\,\frac{z_{12}}{z_{11}}\,\frac{z_8}{z_{13}}.$$

Finally, if gear *6* is shifted into engagement with gear *7*,

$$i_{12} = -\frac{z_7}{z_6} \quad \text{and} \quad i_{12} = -\frac{z_7}{z_6}\,\frac{z_{12}}{z_{11}}\,\frac{z_8}{z_{13}}$$

where z_4, z_5, z_6, z_7, z_8, z_9, z_{10}, z_{11}, z_{12} and z_{13} are the numbers of teeth of gears *4*, *5*, *6*, *7*, *8*, *9*, *10*, *11*, *12* and *13*. Thus, when driving shaft *1* rotates, driven shaft *2* can have any one of six different speeds.

2862	SIX-SPEED GEARBOX MECHANISM WITH CLUTCHES ON THE INPUT AND OUTPUT SHAFTS	CxG SR

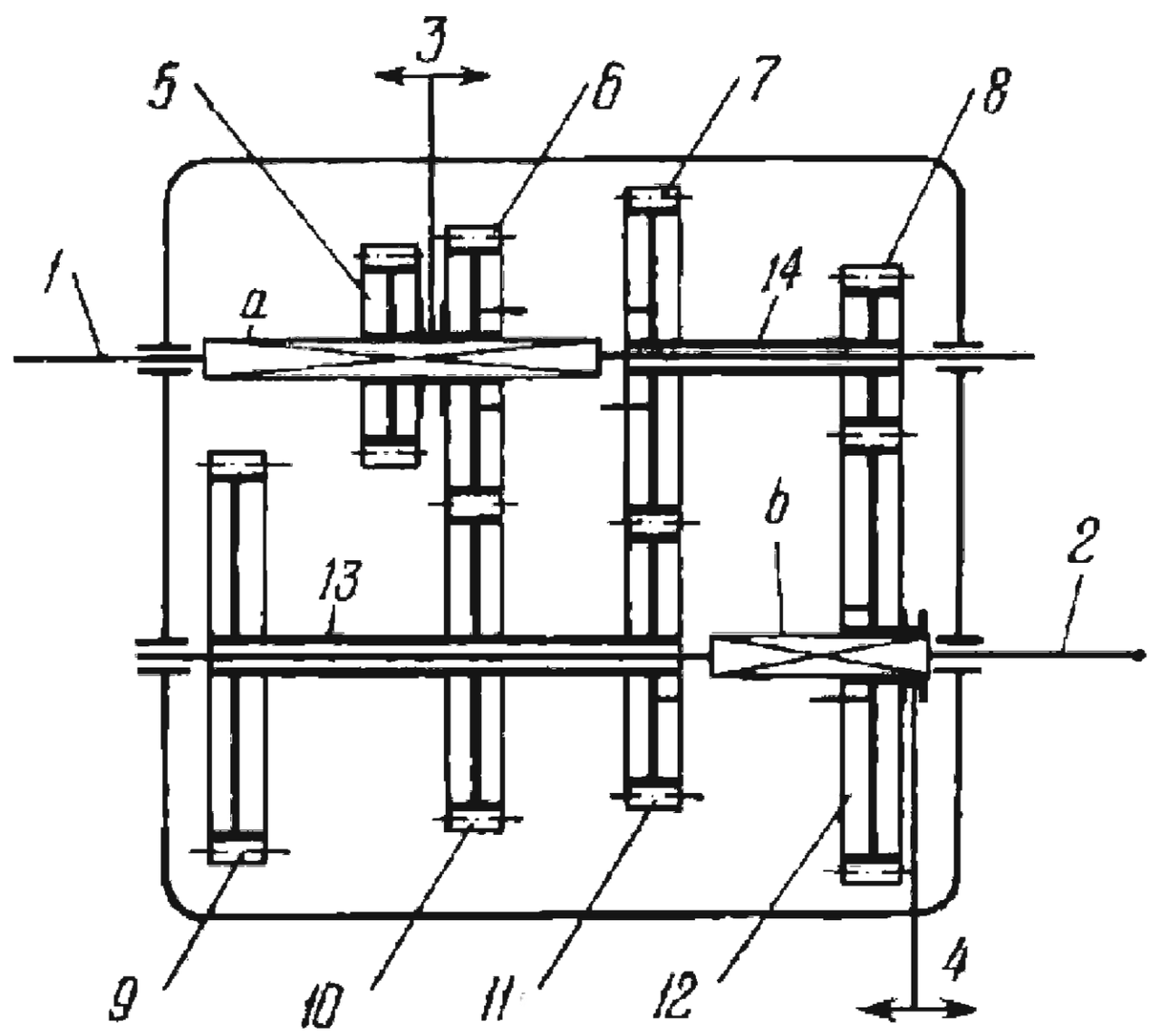

A cluster of two gears, *5* and *6*, slides along square guide *a* of shaft *1*, and can be shifted into engagement with gears *9* and *10* which are keyed, together with gear *11*, to sleeve *13*. Sleeve *13* rotates freely about shaft *2*. Gears *7* and *8* are keyed to sleeve *14* which rotates freely about shaft *1*. Gears *7* and *11* are in constant engagement. Gear *12* slides along square guide *b* of shaft *2*, into and out of engagement with gear *8*. Clutches *3* and *4*, integral with gears *6* and *12*, can be shifted into engagement with the clutch members of gears *7* and *11*. If both clutches are disengaged the transmission ratio is

$$i_{12} = -\frac{z_{10}}{z_6}\,\frac{z_7}{z_{11}}\,\frac{z_{12}}{z_8}$$

when gears *6* and *10* are in engagement, and

$$i_{12} = -\frac{z_9}{z_5}\,\frac{z_7}{z_{11}}\,\frac{z_{12}}{z_8}$$

when gears *5* and *9* are in engagement. If clutch *3* is engaged to gear *7* and clutch *4* is disengaged, the transmission ratio is

$$i_{12} = -\frac{z_{12}}{z_8}.$$

If clutch *3* is engaged to gear *7* and clutch *4* to gear *11*,

$$i_{12} = -\frac{z_{11}}{z_7}.$$

If clutch *3* is disengaged and clutch *4* is engaged to gear *11*,

$$i_{12} = -\frac{z_{10}}{z_6}$$

when gears *10* and *6* are in engagement, and

$$i_{12} = -\frac{z_9}{z_5}$$

when gears *5* and *9* are in engagement, where $z_5, z_6, \ldots, z_{12}$ are the numbers of teeth of gears *5*, *6*, . . ., *12*. Thus, when driving shaft *1* rotates, driven shaft *2* can have any one of six different speeds.

2863	EIGHT-SPEED GEARBOX MECHANISM WITH TWO CLUSTER GEARS AND A CLUTCH	CxG SR

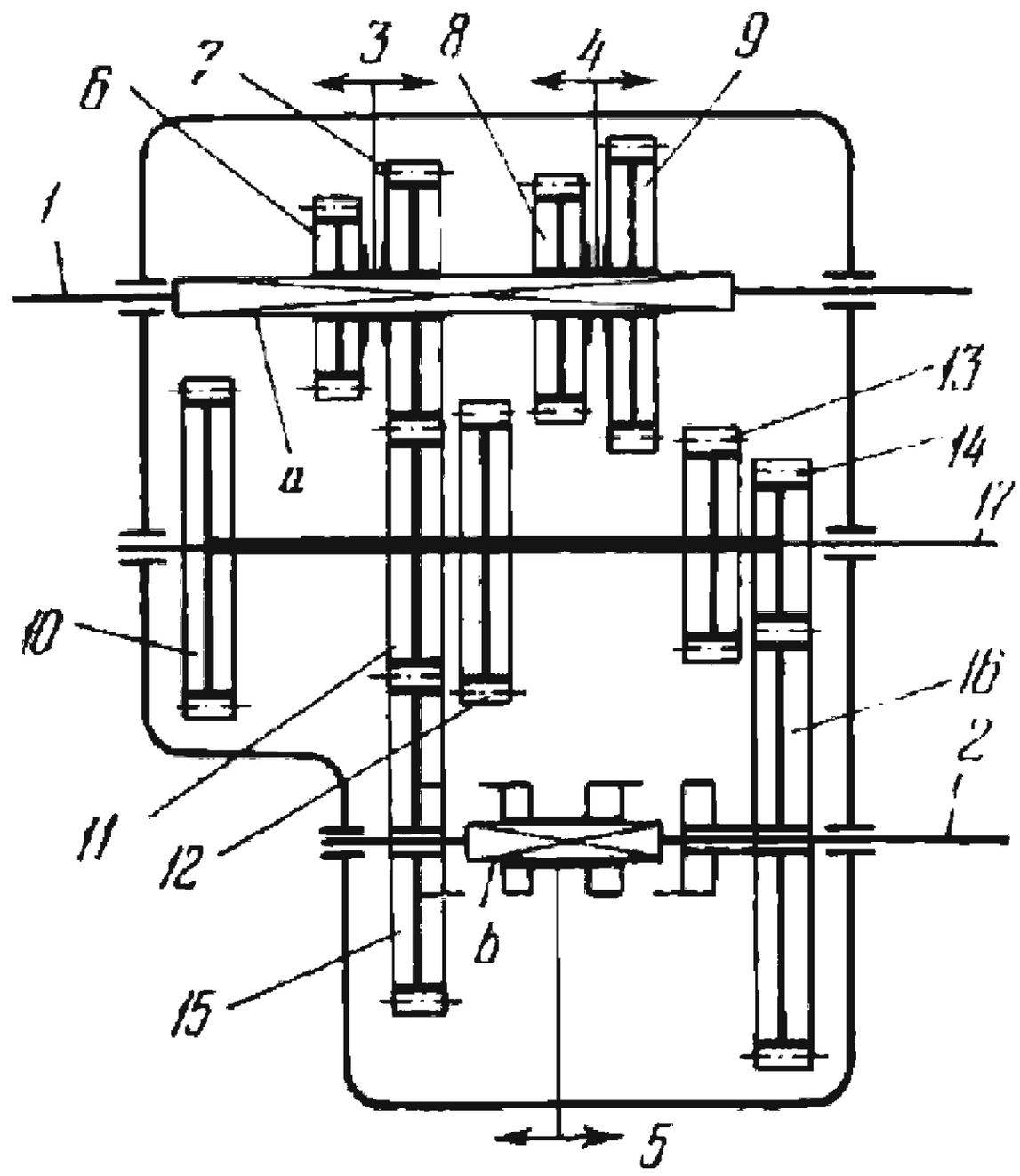

Two gear clusters, *3* and *4*, with gears *6*, *7*, *8* and *9* slide independently of each other along square guide *a* of shaft *1*. Clutch *5* slides along square guide *b* of shaft *2* and can engage the clutch member of either gear *15* or *16* which rotate freely about shaft *2* and are in constant engagement with gears *11* and *14*. Gears *10*, *11*, *12*, *13* and *14* are keyed to intermediate shaft *17*. If clutch *5* is engaged to gear *15*, four different transmission ratios can be obtained when a gear, *6*, *7*, *8* or *9*, of clusters *3* and *4*, is shifted into engagement with the corresponding gear, *10*, *11*, *12* or *13*. Thus

$$i_{12}=\frac{z_{10}}{z_6}\,\frac{z_{15}}{z_{11}}, \qquad i_{12}=\frac{z_{15}}{z_7},$$

$$i_{12}=\frac{z_{12}}{z_8}\,\frac{z_{15}}{z_{11}} \quad \text{and} \quad i_{12}=\frac{z_{13}}{z_9}\,\frac{z_{15}}{z_{11}}.$$

If clutch *5* is engaged to gear *16*, four more different transmission ratios are obtained. Thus

$$i_{12}=\frac{z_{10}}{z_6}\,\frac{z_{16}}{z_{14}}, \qquad i_{12}=\frac{z_{11}}{z_7}\,\frac{z_{16}}{z_{14}},$$

$$i_{12}=\frac{z_{12}}{z_8}\,\frac{z_{16}}{z_{14}} \quad \text{and} \quad i_{12}=\frac{z_{13}}{z_9}\,\frac{z_{16}}{z_{14}}$$

where z_6, z_7, . . ., z_{16} are the numbers of teeth of gears *6*, *7*, . . ., *16*. Thus, when driving shaft *1* rotates, driven shaft *2* can have any one of eight different speeds.

2864	EIGHT-SPEED GEARBOX MECHANISM WITH A CLUTCH, INTERMESHING GEAR CONES AND A SLIDING KEY	CxG SR

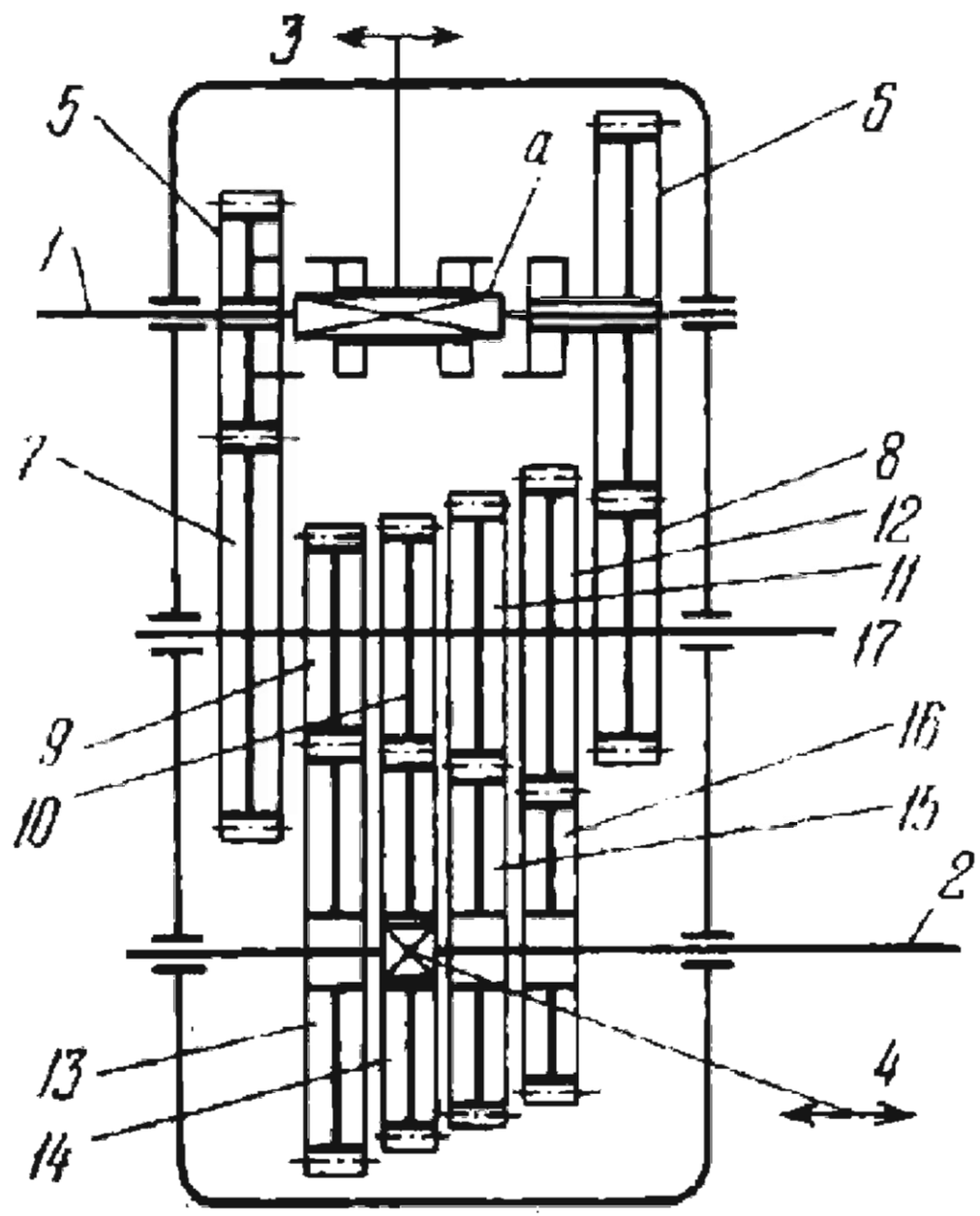

Clutch *3* slides along square guide *a* of shaft *1* and can engage either gear *5* or *6* which rotate freely on shaft *1* and are in constant engagement with gears *7* and *8*. Gears *7* and *8* and cone gears *9*, *10*, *11* and *12* are keyed to intermediate shaft *17*. Cone gears *9*, *10*, *11* and *12* are in constant engagement with cone gears *13*, *14*, *15* and *16* which rotate freely about shaft *2*. Rectangular sliding key *4* can be shifted along shaft *2*, keying one of the gears to this shaft. The sum of the pitch radii is the same for all the pairs of meshing cone gears. If clutch *3* is engaged to gear *5*, four different transmission ratios can be obtained, depending on which gear, *13*, *14*, *15* or *16*, is engaged by key *4*. Thus

$$i_{12}=\frac{z_7}{z_5}\,\frac{z_{13}}{z_9}, \qquad i_{12}=\frac{z_7}{z_5}\,\frac{z_{14}}{z_{10}},$$

$$i_{12}=\frac{z_7}{z_5}\,\frac{z_{15}}{z_{11}} \quad \text{and} \quad i_{12}=\frac{z_7}{z_5}\,\frac{z_{16}}{z_{12}}.$$

If clutch *3* is engaged to gear *6*, four more different transmission ratios are obtained. Thus

$$i_{12}=\frac{z_8}{z_6}\,\frac{z_{13}}{z_9}, \qquad i_{12}=\frac{z_8}{z_6}\,\frac{z_{14}}{z_{10}},$$

$$i_{12}=\frac{z_8}{z_6}\,\frac{z_{15}}{z_{11}} \quad \text{and} \quad i_{12}=\frac{z_8}{z_6}\,\frac{z_{16}}{z_{12}}$$

where z_5, z_6, . . ., z_{16} are the numbers of teeth of gears *5*, *6*, ..., *16*. Thus, when driving shaft *1* rotates, driven shaft *2* can have any one of eight different speeds.

2865	TWELVE-SPEED GEARBOX MECHANISM WITH TWO CLUTCHES AND A FLEXIBLE LINK	CxG SR

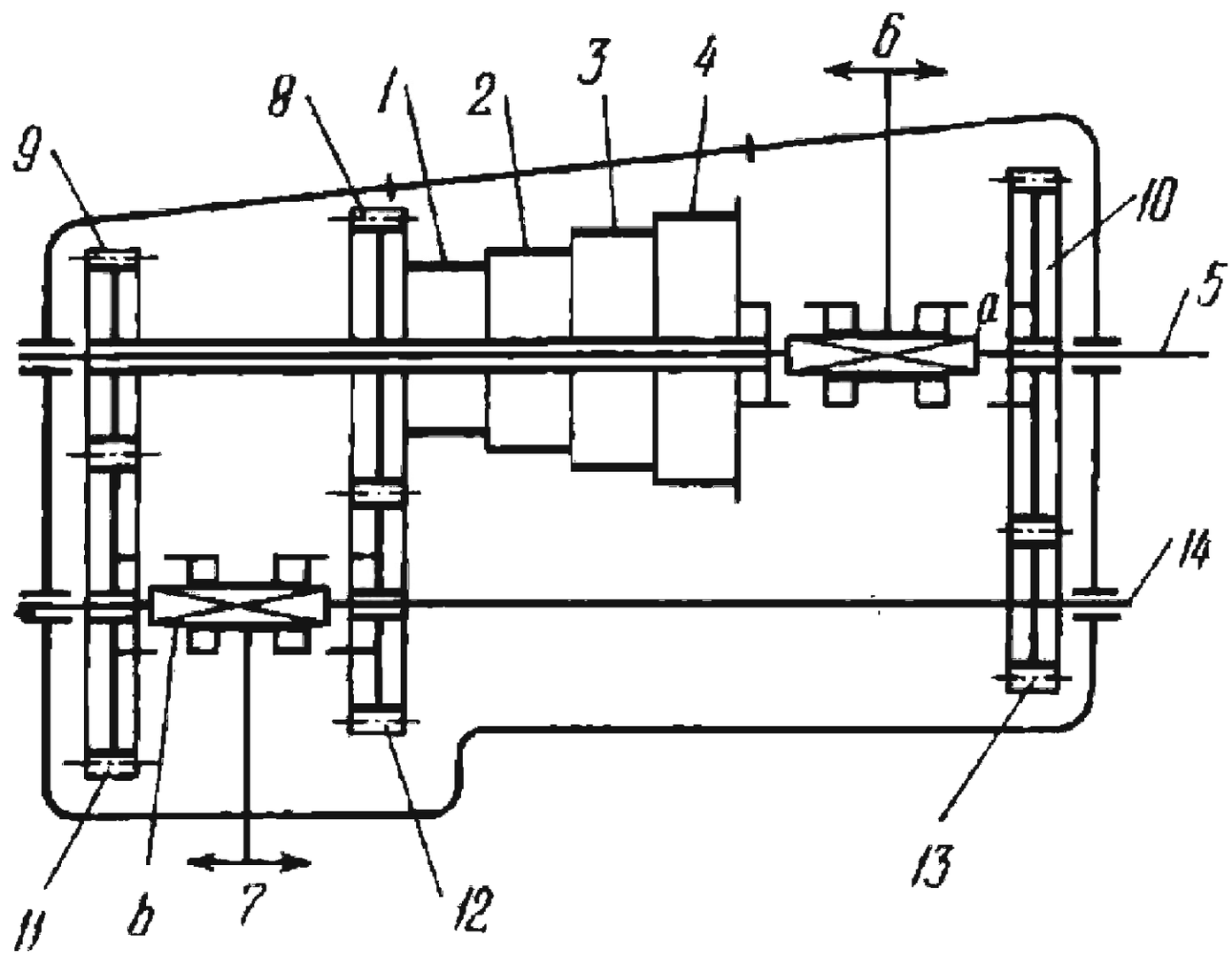

A cone-pulley with steps *1*, *2*, *3* and *4* is rigidly attached to (or integral with) gears *8* and *9*, and they all rotate freely about shaft *5*. Gears *8* and *9* are in constant engagement with gears *12* and *11* which rotate freely about intermediate shaft *14*. Gear *10* rotates freely about shaft *5* and is in constant engagement with gear *13* which is keyed to shaft *14*. Clutches *6* and *7* slide along square guides *a* and *b* of shafts *5* and *14*. If clutch *6* is engaged to the cone-pulley and clutch *7* is disengaged, four different transmission ratios can be obtained, depending on which step, *1*, *2*, *3* or *4*, a belt is put. Thus

$$i_1 = \frac{R}{R_1}, \quad i_2 = \frac{R}{R_2}, \quad i_3 = \frac{R}{R_3} \quad \text{and} \quad i_4 = \frac{R}{R_4}$$

where R is the radius of the driving pulley and R_1, R_2, R_3 and R_4 are the radii of pulley steps *1*, *2*, *3* and *4*. If clutch *6* is engaged to gear *10* and clutch *7* to gear *11*, four more different transmission ratios can be obtained. Thus

$$i_{i5} = i_i \frac{z_{11}}{z_9} \frac{z_{10}}{z_{13}}$$

where i is *1*, *2*, *3* or *4*, and z_9, z_{10}, z_{11} and z_{13} are the numbers of teeth of gears *9*, *10*, *11* and *13*. Finally, if clutch *6* is engaged to gear *10* and clutch *7* to gear *12*, the last four different transmission ratios can be obtained. Thus

$$i_{i5} = i_i \frac{z_{12}}{z_8} \frac{z_{10}}{z_{13}}$$

where i is *1*, *2*, *3* or *4* and z_8, z_{10}, z_{12} and z_{13} are the numbers of teeth of gears *8*, *10*, *12* and *13*. Thus, when the driving shaft rotates, driven shaft *5* can have any one of twelve different speeds.

2866	SIXTEEN-SPEED GEARBOX MECHANISM WITH FOUR CLUTCHES	CxG SR

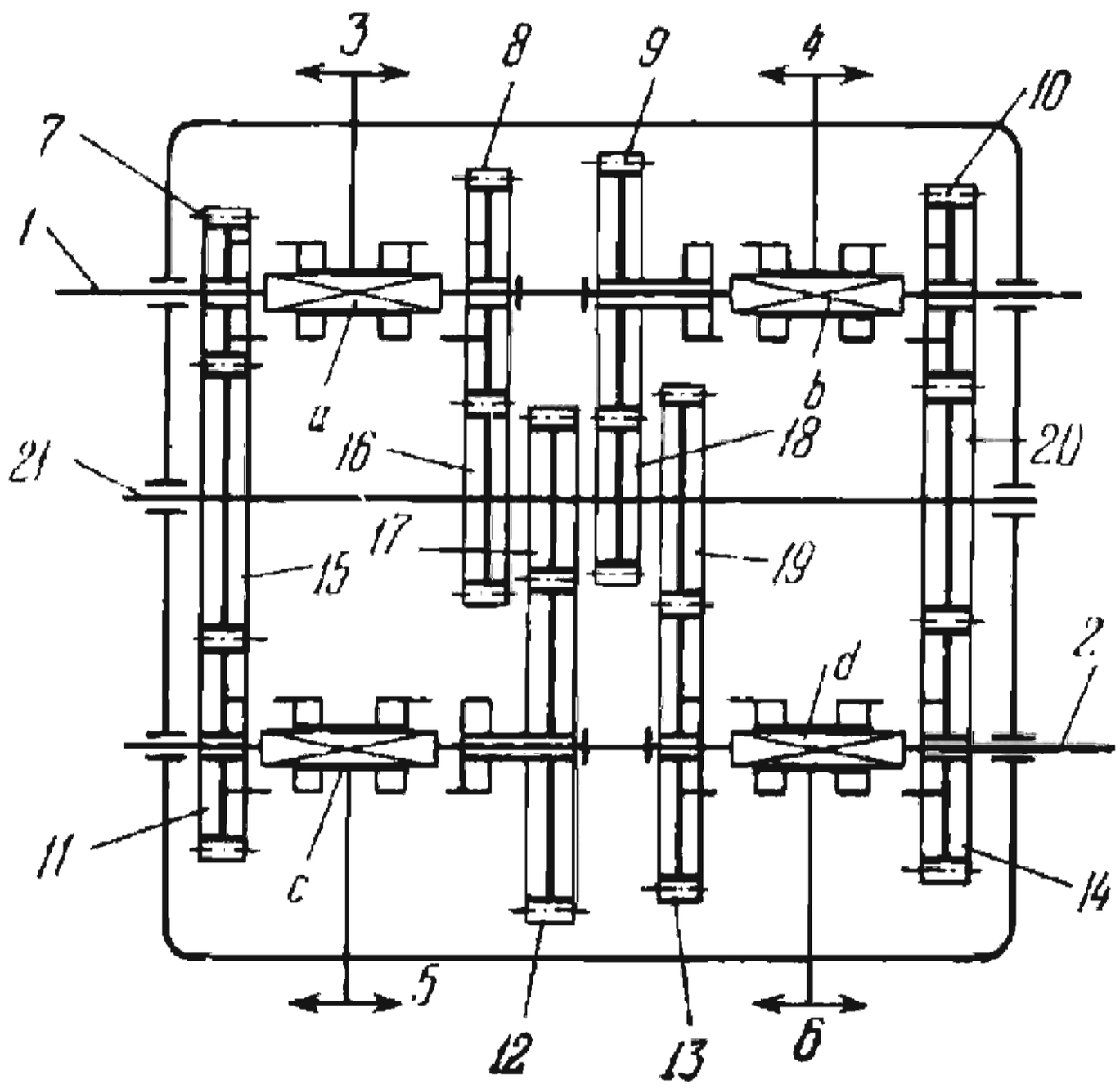

Gears *7*, *8*, *9* and *10* rotate freely on shaft *1* and are in constant engagement with gears *15*, *16*, *18* and *20* which are keyed to intermediate shaft *21*. Gears *11*, *12*, *13* and *14* rotate freely on shaft *2* and are in constant engagement with gears *15*, *17*, *19* and *20* which are keyed to shaft *21*. Four symmetrically located clutches, *3*, *4*, *5* and *6*, slide along square guides *a*, *b*, *c* and *d* of shafts *1* and *2*. Only one of the clutches on each shaft can be engaged at the same time. If clutch *3* is engaged to gear *7* (clutch *4* being disengaged) and clutch *5* is engaged consecutively to gears *11* and *12*, and then clutch *6* is engaged consecutively to gears *13* and *14*, four different transmission ratios can be obtained. Thus

$$i_{12}=\frac{z_{11}}{z_7}, \qquad i_{12}=\frac{z_{15}}{z_7}\,\frac{z_{12}}{z_{17}},$$

$$i_{12}=\frac{z_{15}}{z_7}\,\frac{z_{13}}{z_{19}} \quad \text{and} \quad i_{12}=\frac{z_{15}}{z_7}\,\frac{z_{14}}{z_{20}}.$$

If clutch *3* is engaged to gear *8* (clutch *4* being disengaged again), and clutches *5* and *6* are engaged consecutively to gears *11*, *12*, *13* and *14*, the next four transmission ratios can be obtained. Four more can be obtained by disengaging clutch *3* and engaging clutch *4* to gear *9*, and the final four by engaging clutch *4* to gear *10*, clutches *5* and *6* being consecutively engaged, in each case to gears *11*, *12*, *13* and *14*. Thus

$$i_{12}=\frac{z_{16}}{z_8}\,\frac{z_{11}}{z_{15}}, \qquad i_{12}=\frac{z_{16}}{z_8}\,\frac{z_{12}}{z_{17}},$$

$$i_{12}=\frac{z_{16}}{z_8}\,\frac{z_{13}}{z_{19}} \quad \text{and} \quad i_{12}=\frac{z_{16}}{z_8}\,\frac{z_{14}}{z_{20}}$$

$$i_{12}=\frac{z_{18}}{z_9}\,\frac{z_{11}}{z_{15}}, \qquad i_{12}=\frac{z_{18}}{z_9}\,\frac{z_{12}}{z_{17}},$$

$$i_{12}=\frac{z_{18}}{z_9}\,\frac{z_{13}}{z_{19}} \quad \text{and} \quad i_{12}=\frac{z_{18}}{z_9}\,\frac{z_{14}}{z_{20}}$$

$$i_{12}=\frac{z_{20}}{z_{10}}\,\frac{z_{11}}{z_{15}}, \qquad i_{12}=\frac{z_{20}}{z_{10}}\,\frac{z_{12}}{z_{17}},$$

$$i_{12}=\frac{z_{20}}{z_{10}}\,\frac{z_{13}}{z_{19}} \quad \text{and} \quad i_{12}=\frac{z_{14}}{z_{10}}$$

where $z_7, z_8, \ldots, z_{20}$ are the numbers of teeth of gears *7*, *8*, ..., *20*. Thus, when driving shaft *1* rotates, driven shaft *2* can have any one of sixteen different speeds.

2867	SIXTEEN-SPEED GEARBOX MECHANISM WITH THREE OUTPUT SHAFTS	CxG SR

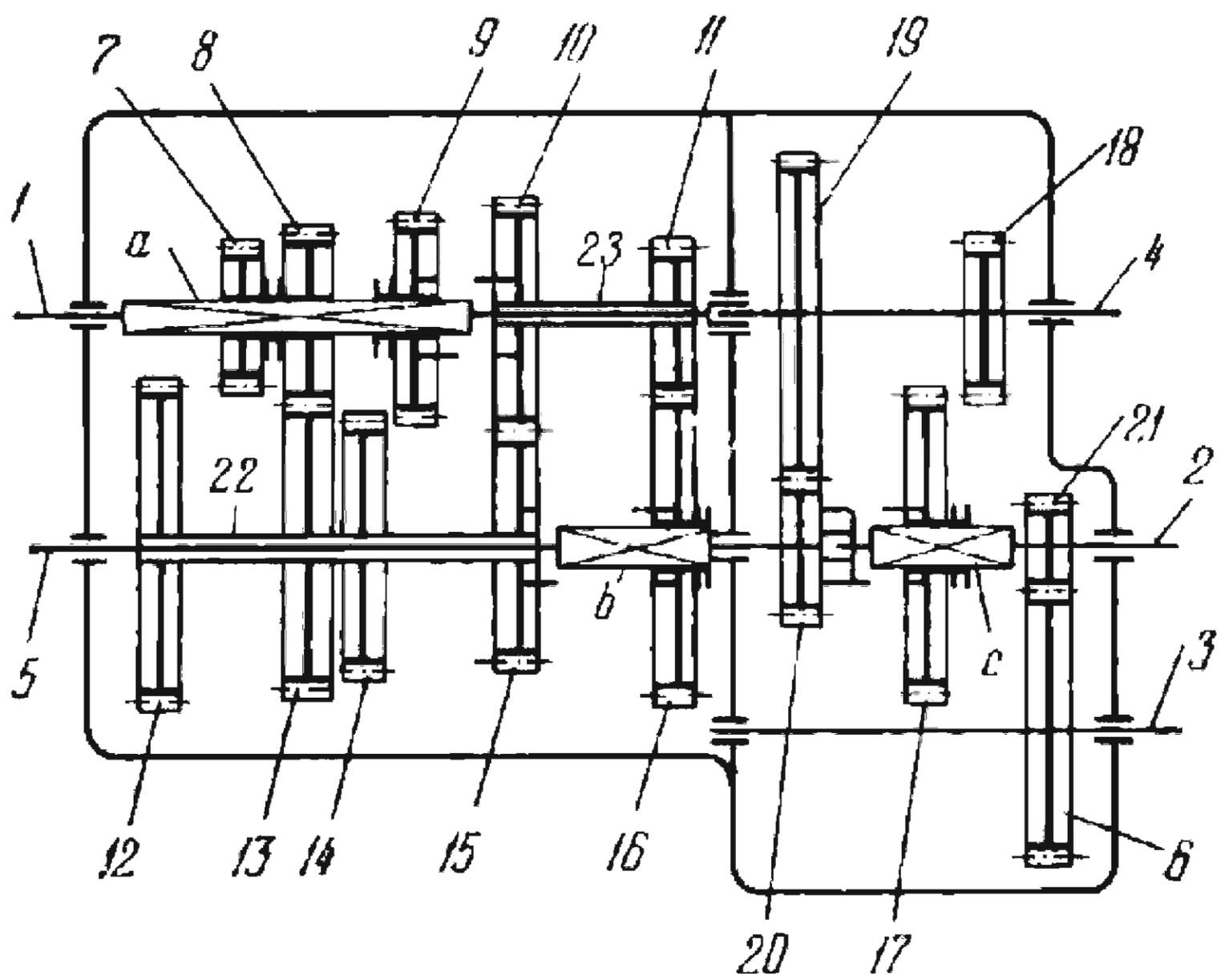

Gears *7*, *8* and *9* slide along square guide *a* of driving shaft *1* and can be shifted into engagement with gears *12*, *13* and *14* which are keyed, together with gear *15*, to sleeve *22*. Sleeve *22* rotates freely on intermediate shaft *5*. Gear *15* is in constant engagement with gear *10*. Gears *10* and *11* are keyed to sleeve *23* which rotates freely on shaft *1*. Gear *16* slides along square guide *b* of shaft *5* so that it can be shifted out of engagement with gear *11* and into engagement, by means of clutch members, with gear *15*. Gear *20* is keyed to shaft *5* and is in constant engagement with gear *19* which, together with gear *18*, is keyed to shaft *4*, one of the driven shafts. Gear *17* slides along square guide *c* of shaft *2*, the second driven shaft, so that it can either mesh with gear *18* or be shifted into engagement, by means of clutch members, with gear *20*. Gear *21* is keyed to shaft *2* and is in constant engagement with gear *6* which is keyed to shaft *3*, the third driven shaft. Thus, when driving shaft *1* rotates, driven shafts *2*, *3* and *4* rotate at different speeds. If, for example, gear *8* is in engagement with gear *13*, gear *10* with gear *15* and gear *18* with gear *17*, the three transmission ratios from the

driving to the three driven shafts are

$$i_{12} = -\frac{z_{13}}{z_8}\frac{z_{10}}{z_{15}}\frac{z_{16}}{z_{11}}\frac{z_{19}}{z_{20}}\frac{z_{17}}{z_{18}},$$

$$i_{13} = \frac{z_{13}}{z_8}\frac{z_{10}}{z_{15}}\frac{z_{16}}{z_{11}}\frac{z_{19}}{z_{20}}\frac{z_{17}}{z_{18}}\frac{z_6}{z_{21}}$$

$$\text{and} \quad i_{14} = \frac{z_{13}}{z_8}\frac{z_{10}}{z_{15}}\frac{z_{16}}{z_{11}}\frac{z_{19}}{z_{20}}.$$

Now, if gear *17* is shifted out of engagement with gear *18* and into engagement with the clutch member of gear *20*, the three transmission ratios are

$$i_{12} = -\frac{z_{13}}{z_8}\frac{z_{10}}{z_{15}}\frac{z_{16}}{z_{11}}, \qquad i_{13} = \frac{z_{13}}{z_8}\frac{z_{10}}{z_{15}}\frac{z_{16}}{z_{11}}\frac{z_6}{z_{21}}$$

$$\text{and} \quad i_{14} = \frac{z_{13}}{z_8}\frac{z_{10}}{z_{15}}\frac{z_{16}}{z_{11}}\frac{z_{19}}{z_{20}}$$

i.e. transmission ratio i_{14} is unchanged. Two other series of transmission ratios are obtained when gears *7* and *12* or *9* and *14* are in engagement instead of gears *8* and *13*. If gears *7* and *8* are not in engagement, gear *17* is shifted into engagement with gear *20* and gear *9* with gear *10*, the three transmission ratios are

$$i_{12} = -\frac{z_{16}}{z_{11}}, \qquad i_{13} = \frac{z_{16}}{z_{11}}\frac{z_6}{z_{21}} \quad \text{and} \quad i_{14} = \frac{z_{16}}{z_{11}}\frac{z_{19}}{z_{20}}.$$

The remaining eight transmission ratios are obtained by engaging gear *16* to gear *15*, shifting gear *7* or *8* or *9* into engagement with gear *12* or *13* or *14*, and gear *17* with gear *18*. In all of the equations, $z_7, z_8, \ldots, z_{21}$ are the numbers of teeth of gears *7*, *8*, . . ., *21*. Thus, when driving shaft *1* rotates, driven shafts *2*, *3* and *4* can have any three of sixteen different speeds.

2868	SIXTEEN-SPEED GEARBOX MECHANISM WITH A FRICTION CLUTCH AND SLIDING GEARS	CxG SR

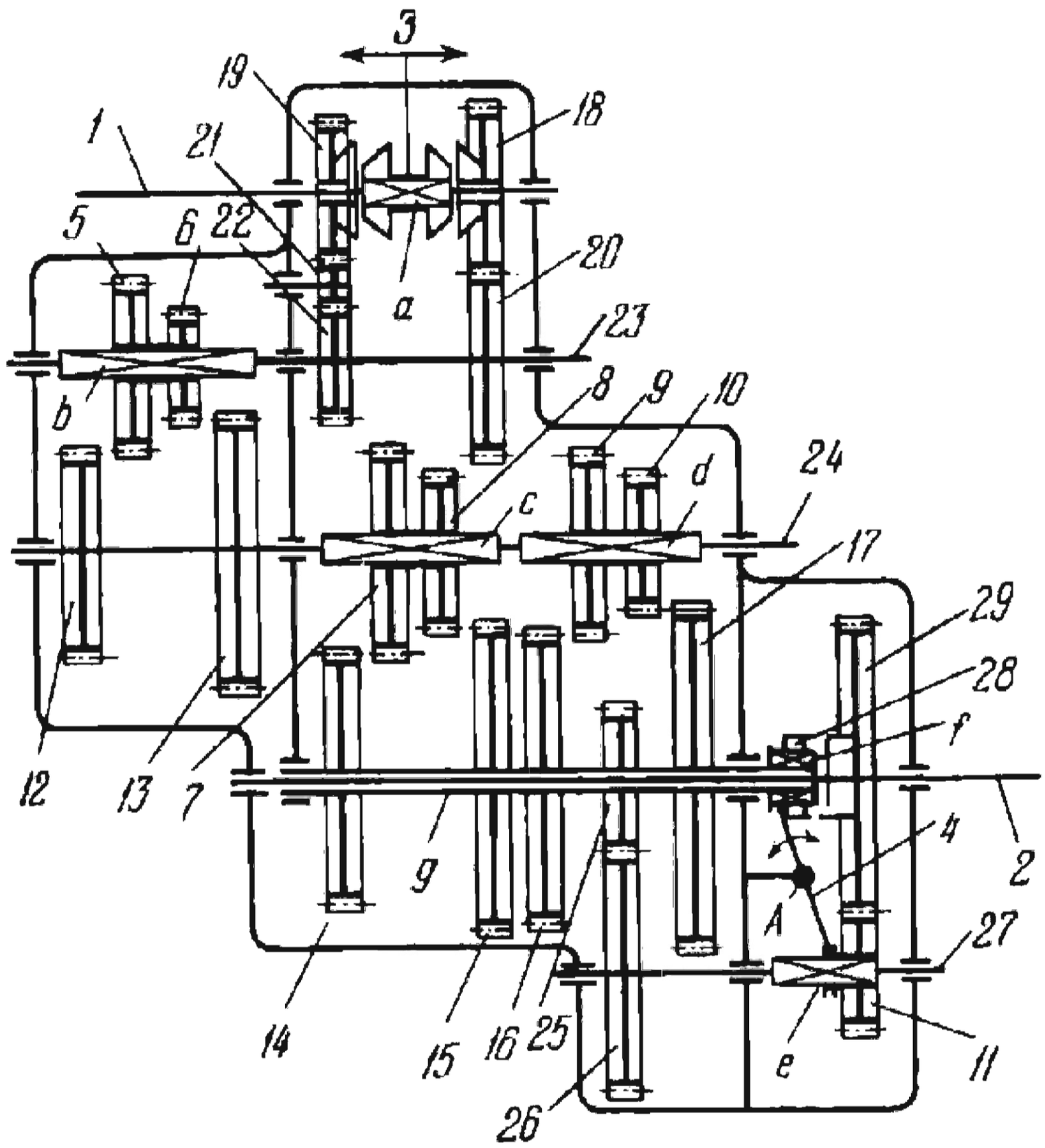

Friction clutch *3* can be shifted so that its cones slide along square guide *a* of shaft *1* to engage either gear *18* or *19* which rotate freely about this shaft. Gear *19* is in constant engagement with idler gear *21* which, in turn, meshes with gear *22*. Gear *18* is in constant engagement with gear *20*. Gears *22* and *20* are keyed to shaft *23*. Gears *5* and *6* form a cluster that slides along square guide *b* of shaft *23* and can be shifted into engagement with gear *12* or *13* which are keyed to shaft *24*. Two clusters, consisting of gears *7* and *8* and gears *9* and *10* slide along square guides *c* and *d* of shaft *24* and can be shifted into engagement with either gear *14*, *15*, *16* or *17* which are keyed, together with gear *25*, to sleeve *g*. Sleeve *g* rotates freely about shaft *2*. Gear *25* is in constant engagement with gear *26* which is keyed to intermediate shaft *27*. Clutch *28* slides along square guide *f* of sleeve *g*. Gear *29* is keyed to shaft *2*. Clutch *28* is engaged to gear *29* by means of shifting lever *4* which turns about fixed axis *A*. Simultaneously, gear *11* is shifted out of engagement with gear *29* by sliding it along square guide *e* of shaft *27*. When clutch *28* is disengaged, gear *11* is shifted into engagement with gear *29*. When driving shaft *1* rotates, driven shaft *2* can have any one of sixteen different speeds depending on the engagements of clutches *3* and *28* and of the sliding gears.

2869	TWENTY-FOUR-SPEED GEARBOX MECHANISM WITH SLIDING CLUSTER GEARS	CxG SR

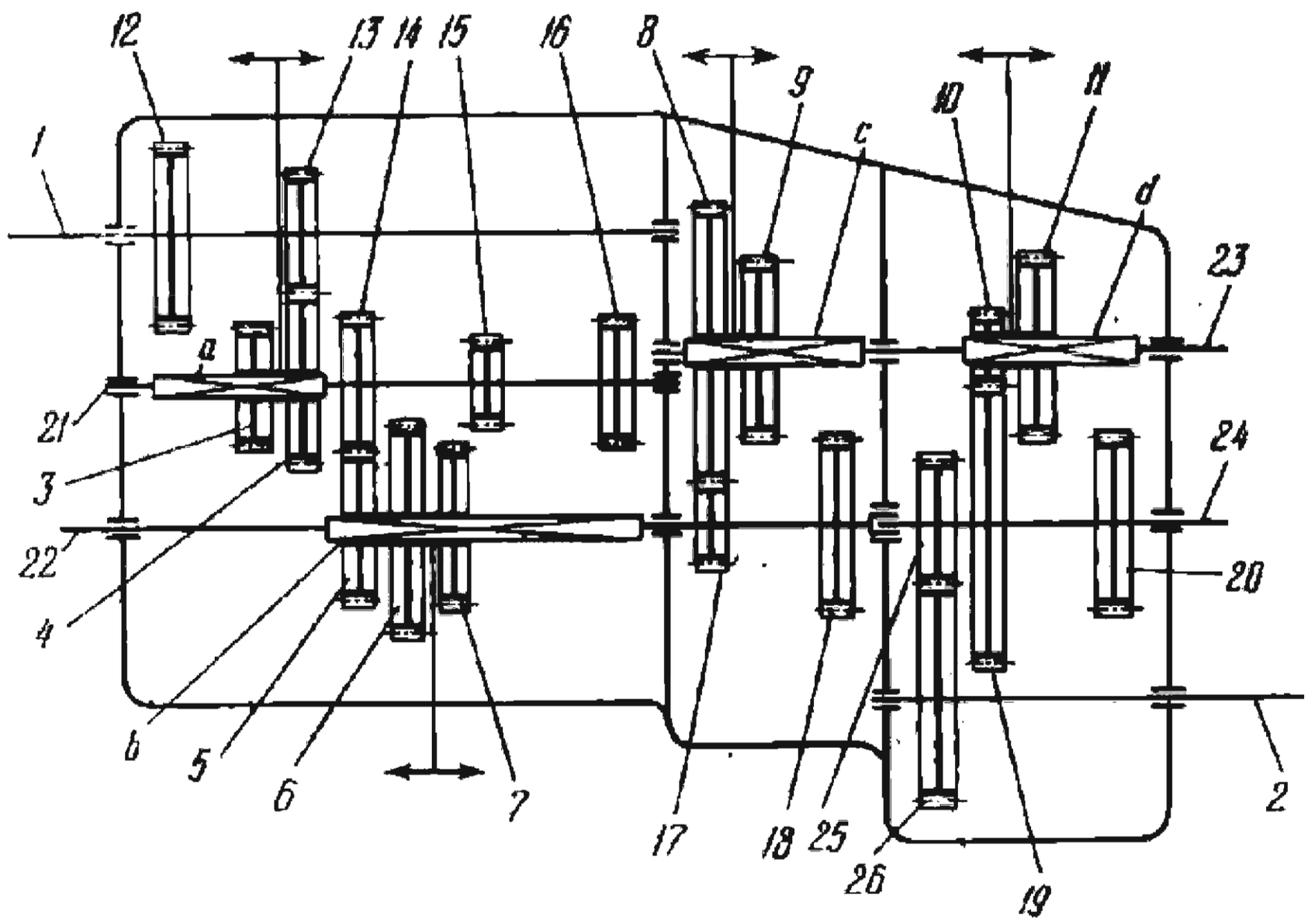

Gears *12* and *13* are keyed to shaft *1*. Gears *3* and *4* form a cluster that slides along square guide *a* of intermediate shaft *21* so that gear *3* or *4* can be engaged to gear *12* or *13*. Gears *5*, *6* and *7* form a cluster that slides along square guide *b* of intermediate shaft *22* so that gear *5*, *6* or *7* can be shifted into engagement with gear *14*, *15* or *16* which are keyed to shaft *21*. Gears *8* and *9*, and gears *10* and *11* form two clusters that slide along square guides *c* and *d* of intermediate shaft *23* so that they can be shifted into engagement with gear *17* or *18*, keyed to shaft *22*, and gear *19* or *20*, keyed to shaft *24*. Gear *25* is keyed to shaft *24* and is in constant engagement with gear *26* which is keyed to shaft *2*. When driving shaft *1* rotates, driven shaft *2* can have any one of twenty-four different speeds, depending on which of the gears in the sliding clusters are in engagement with the gears keyed to the shafts *1*, *21*, *22*, *23* and *24*.

2870	PLANETARY GEARING MECHANISM WITH ONE SUN AND TWO PLANET GEARS	CxG PR

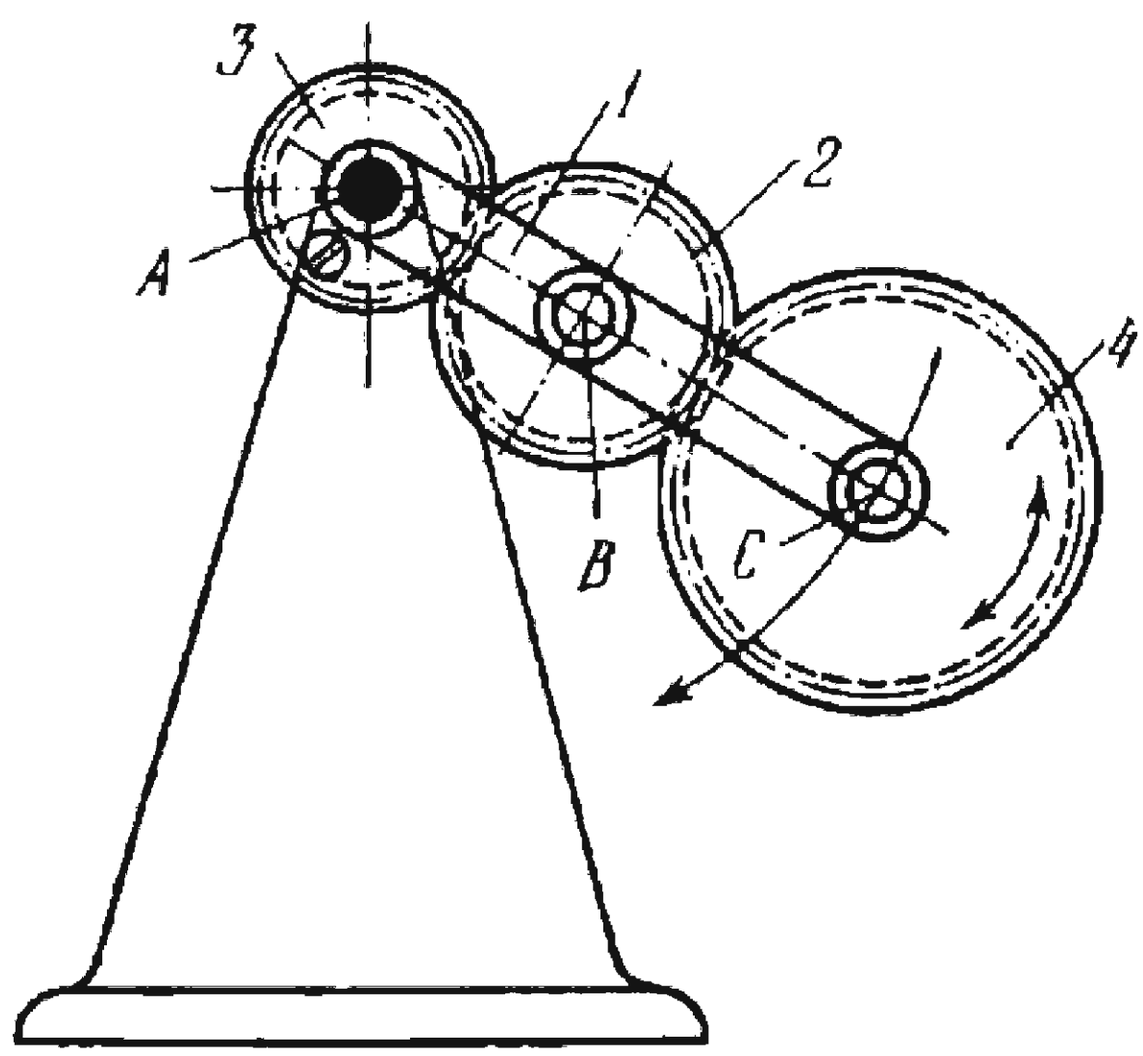

Carrier *1* rotates about fixed axis *A* and is connected by turning pairs *B* and *C* to planet gears *2* and *4*. Planet gear *2* meshes with fixed sun gear *3* and planet gear *4*. The speeds n_1 and n_4 of carrier *1* and gear *4* (in rpm) satisfy the condition

$$n_4 = n_1 \frac{z_4 - z_3}{z_4}$$

where z_3 and z_4 are the numbers of teeth of gears *3* and *4*.

2871	PLANETARY GEARING MECHANISM WITH ONE SUN AND THREE PLANET GEARS	CxG PR

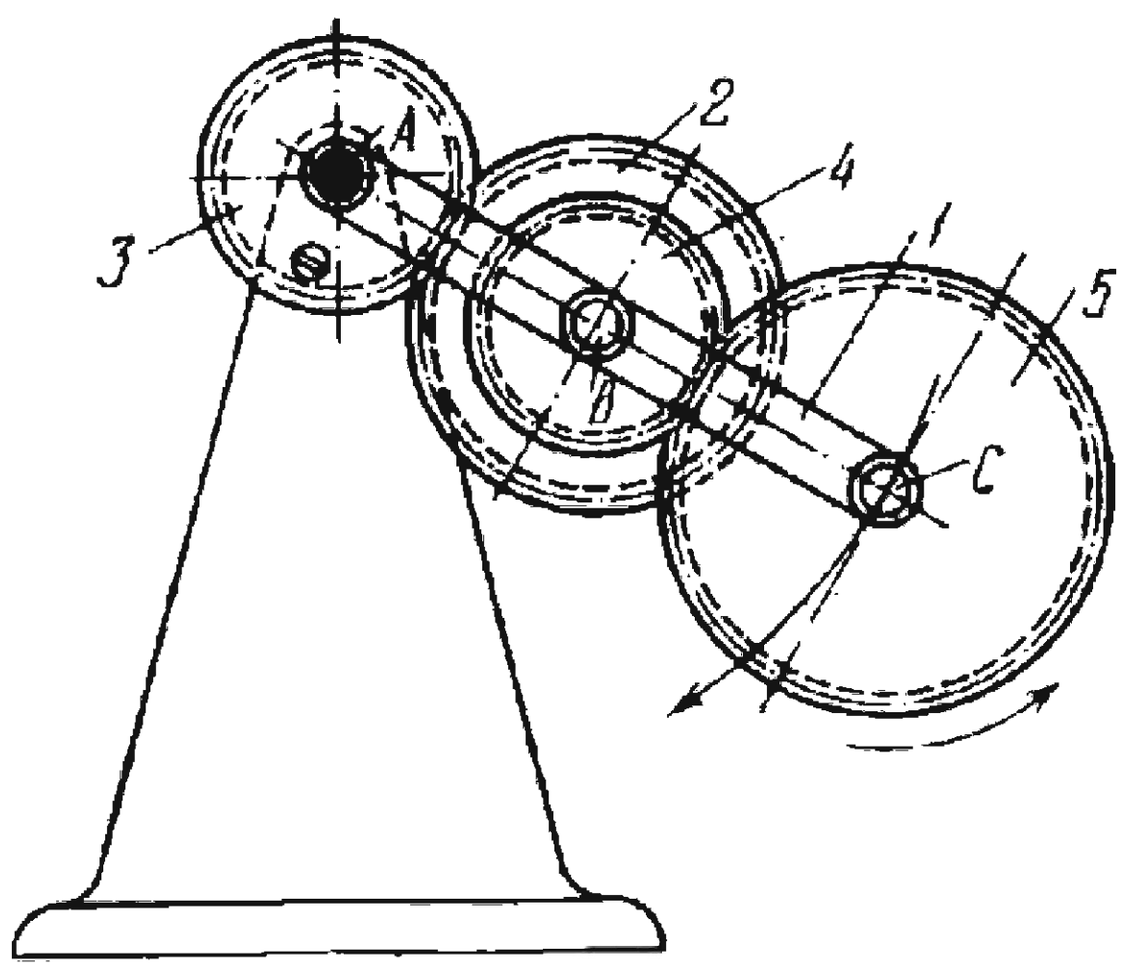

Carrier *1* rotates about fixed axis *A* and is connected by turning pair *B* to rigidly attached planet gears *2* and *4* and by turning pair *C* to planet gear *5*. Planet gear *2* meshes with fixed sun gear *3*; planet gear *4* meshes with planet gear *5*. The speeds n_1 and n_5 of carrier *1* and gear *5* (in rpm) satisfy the condition

$$n_5 = n_1 \frac{z_2 z_5 - z_3 z_4}{z_2 z_5}$$

where z_2, z_3, z_4 and z_5 are the numbers of teeth of gears *2*, *3*, *4* and *5*.

2872	PLANETARY GEARING MECHANISM WITH TWO DRIVEN LINKS	CxG PR

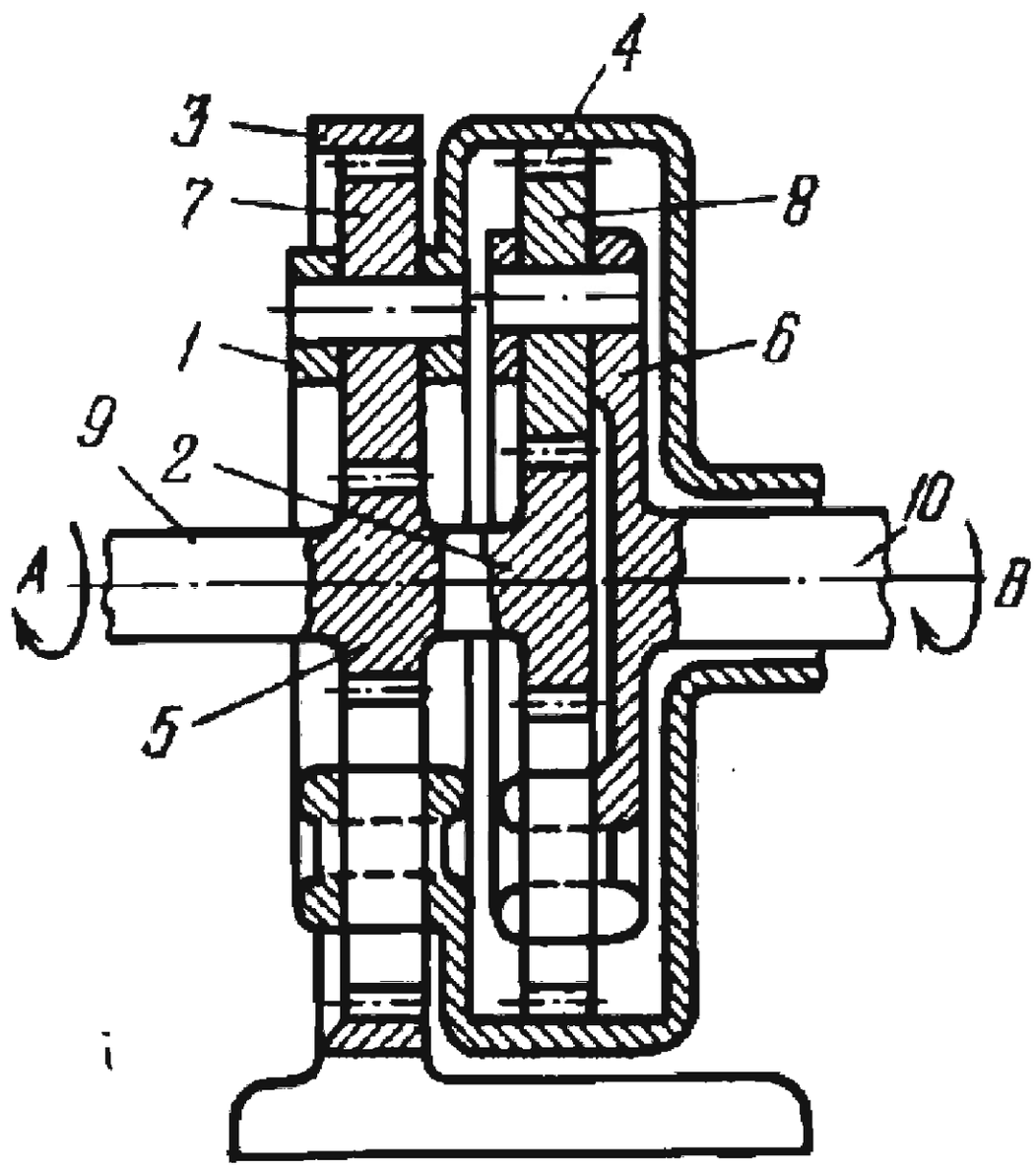

Gears *2* and *5* rotate about fixed axis *A* and are rigidly attached to (or integral with) shaft *9*. Gears *2* and *5* mesh with planet gears *8* and *7*. Gear *7* meshes with fixed internal gear *3*. Carrier *1* is rigidly attached to internal gear *4* which meshes with planet gear *8*. Carrier *6* is rigidly attached to (or integral with) shaft *10* which rotates about fixed axis *B*. Internal gear *4* rotates freely about shaft *10*. Thus, driving shaft *9* transmits rotation in the same direction to two driven links: shaft *10* and internal gear *4*. The speeds n_5, n_4 and n_6 of gears *5* and *4* and carrier *6* (in rpm) are related by the equations

$$n_4 = n_5 \frac{z_3}{z_3 + z_5}$$

and

$$n_6 = n_5 \frac{z_2 (z_3 + z_5) + z_4 z_3}{(z_2 + z_4)(z_3 + z_5)}$$

where z_2, z_3, z_4 and z_5 are the numbers of teeth of gears *2*, *3*, *4* and *5*.

2873	FERGUSSON PLANETARY GEARING MECHANISM	CxG PR

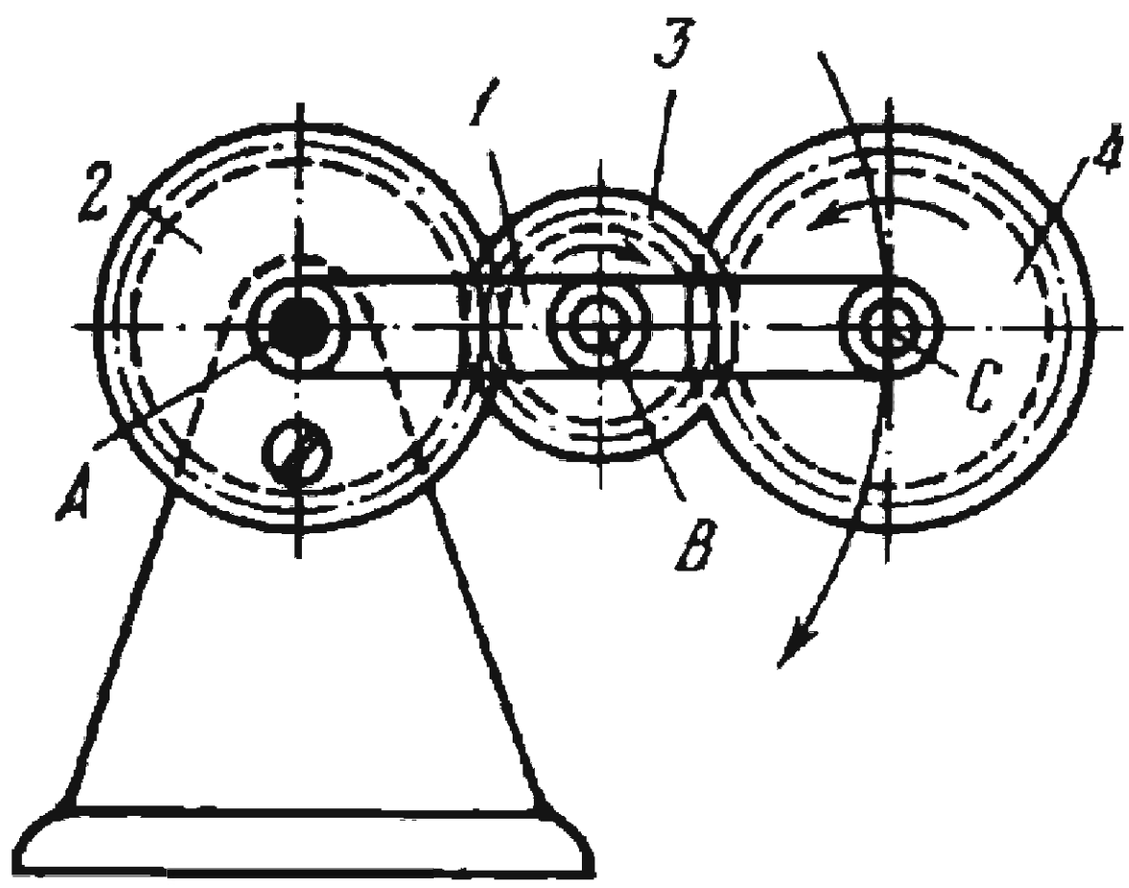

Carrier *1* rotates about fixed axis *A* and is connected by turning pairs *B* and *C* to planet gears *3* and *4*. Planet gear *3* meshes with fixed sun gear *2* and planet gear *4*. The speeds n_1 and n_4 of carrier *1* and gear *4* (in rpm) satisfy the condition

$$n_4 = n_1 \frac{z_4 - z_2}{z_4}$$

where z_2 and z_4 are the numbers of teeth of gears *2* and *4*. If gears *2* and *4* are of the same size, we obtain the "Fergusson Paradox" consisting of the fact that gear *4* has simple circular translation about axis *A*.

2874	FOUR-LINK PLANETARY REDUCING GEAR MECHANISM WITH ONE INTERNAL GEAR	CxG PR

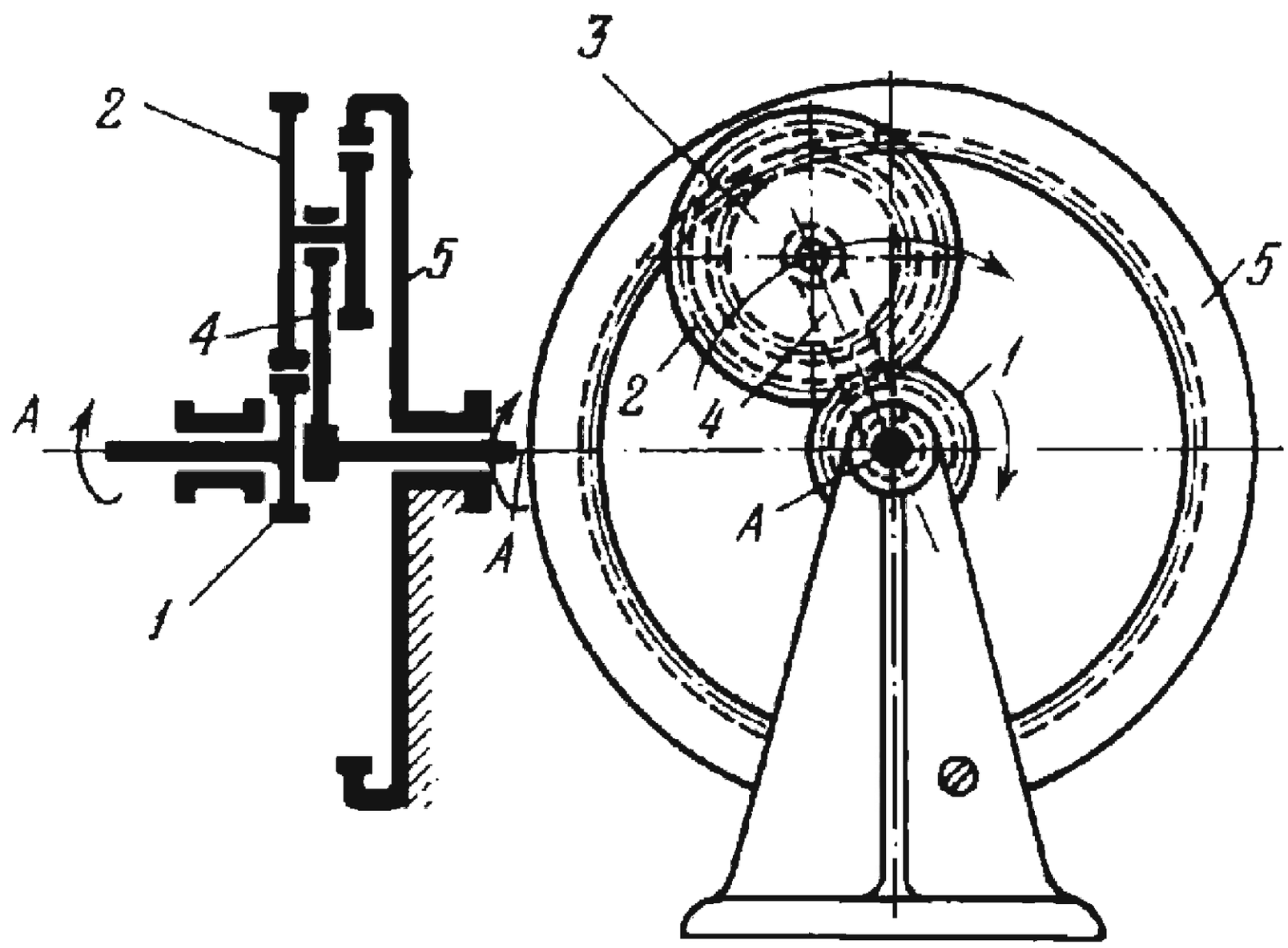

Gear *1* rotates about fixed axis *A-A* and meshes with planet gear *2* which is rigidly attached to planet gear *3*. Gear *3* meshes with fixed internal gear *5*. Carrier *4* rotates about axis *A-A* and is connected by a turning pair to planet gears *2* and *3*. For gears *1* and *5* to be coaxial, the numbers of teeth of gears *1*, *2*, *3* and *5* should satisfy the condition (if the gears have the same module):

$$z_1 + z_2 + z_3 = z_5$$

The speeds n_1 and n_4 of gear *1* and carrier *4* (in rpm) satisfy the condition

$$n_4 = n_1 \frac{z_1 z_3}{z_1 z_3 + z_2 z_5}$$

where z_1, z_2, z_3 and z_5 are the numbers of teeth of gears *1*, *2*, *3* and *5*. Carrier *4* and gear *1* rotate in the same direction.

2875	FOUR-LINK PLANETARY REDUCING GEAR MECHANISM WITH TWO INTERNAL GEARS	CxG PR

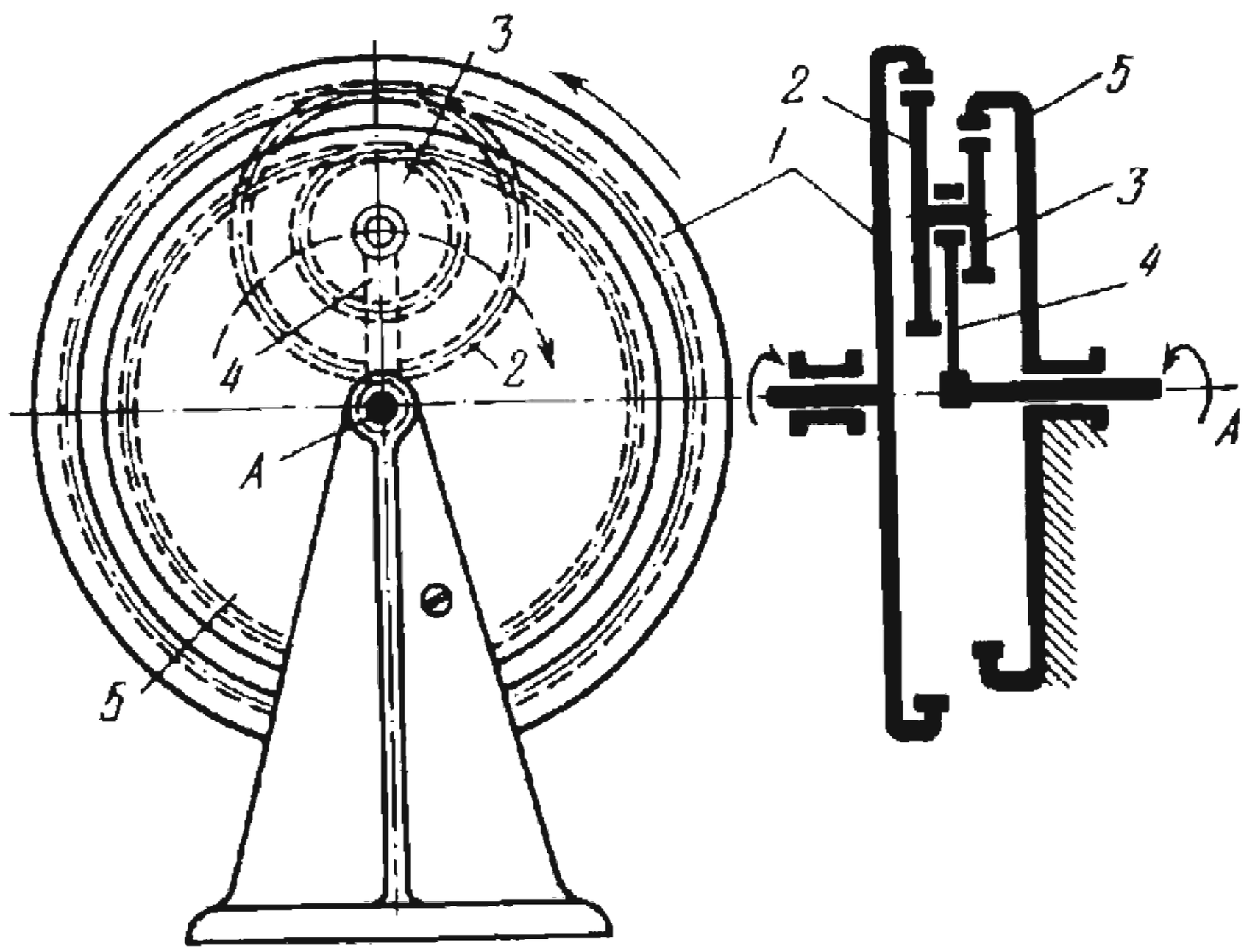

Internal gear *1* rotates about fixed axis *A* and meshes with planet gear *2* which is rigidly attached to planet gear *3*. Gear *3* meshes with fixed internal gear *5*. Carrier *4* rotates about axis *A* and is connected by a turning pair to planet gears *2* and *3*. For links *1* and *4* to be coaxial, the numbers of teeth of gears *1*, *2*, *3* and *5* should satisfy the condition (if they have the same module):

$$z_1 + z_3 = z_2 + z_5.$$

The speeds n_1 and n_4 of gear *1* and carrier *4* (in rpm) satisfy the condition

$$n_4 = -n_1 \frac{z_1 z_3}{z_2 z_5 - z_1 z_3}.$$

For the relative sizes of the links shown, gear *1* and carrier *4* rotate in opposite directions.

2876	FOUR-LINK PLANETARY REDUCING GEAR MECHANISM WITH EXTERNAL GEARING	CxG PR

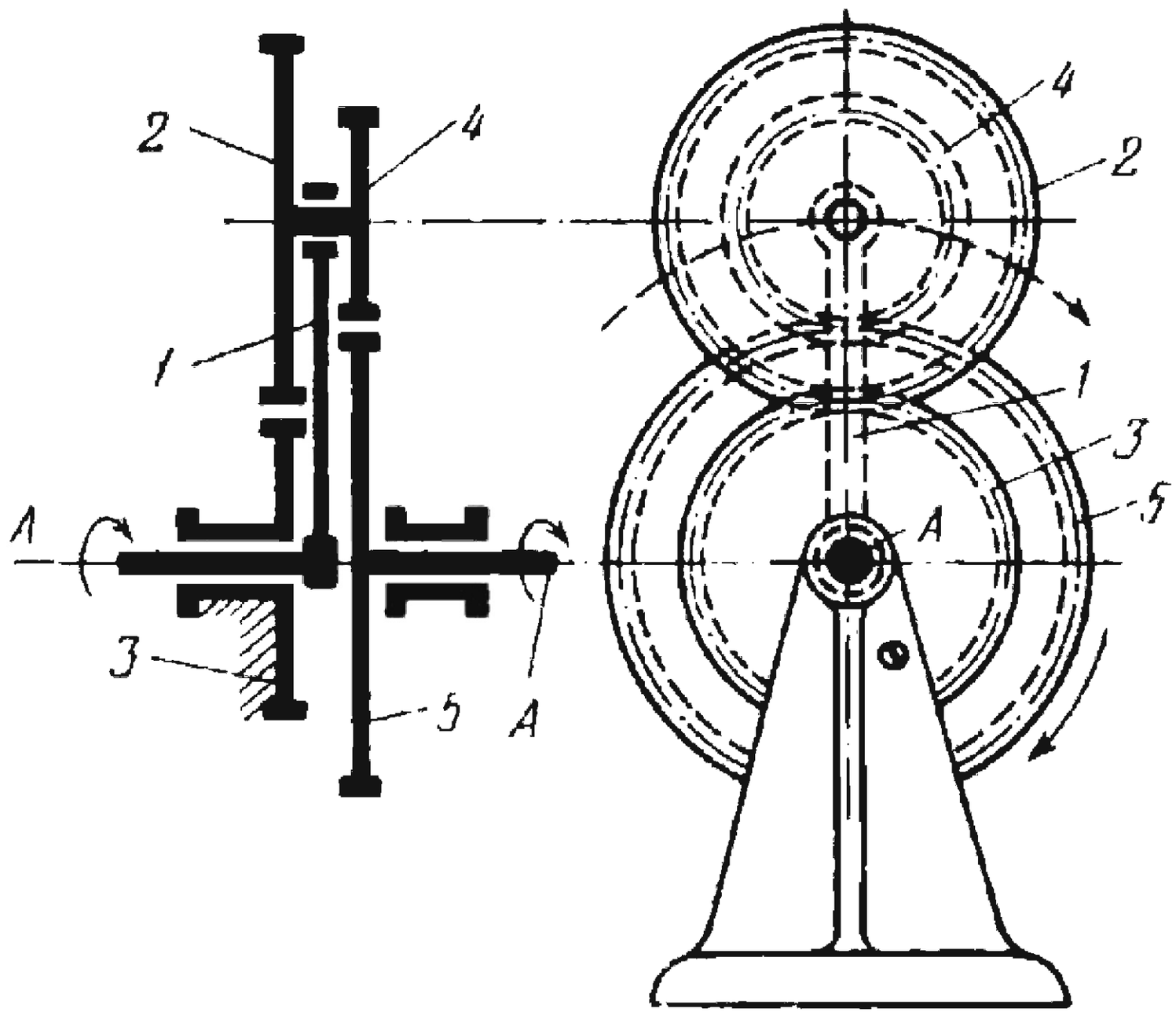

Carrier *1* rotates about fixed axis *A-A* and is connected by a turning pair to planet gears *2* and *4* which are rigidly attached together. Gear *2* meshes with fixed sun gear *3* and gear *4* with gear *5* which rotates about axis *A-A*. For links *1* and *5* to be coaxial, the numbers of teeth of gears *2*, *3*, *4* and *5* should satisfy the condition (if the gears have the same module):

$$z_2 + z_3 = z_4 + z_5$$

The speeds n_1 and n_5 of carrier *1* and gear *5* satisfy the condition

$$n_5 = n_1 \frac{z_2 z_5 - z_3 z_4}{z_2 z_5}$$

where z_2, z_3, z_4 and z_5 are the numbers of teeth of gears *2*, *3*, *4* and *5*. For the relative sizes of the links shown, carrier *1* and gear *5* rotate in the same direction.

2877	FOUR-LINK PLANETARY GEARING MECHANISM OF A DEMONSTRATION MODEL	CxG PR

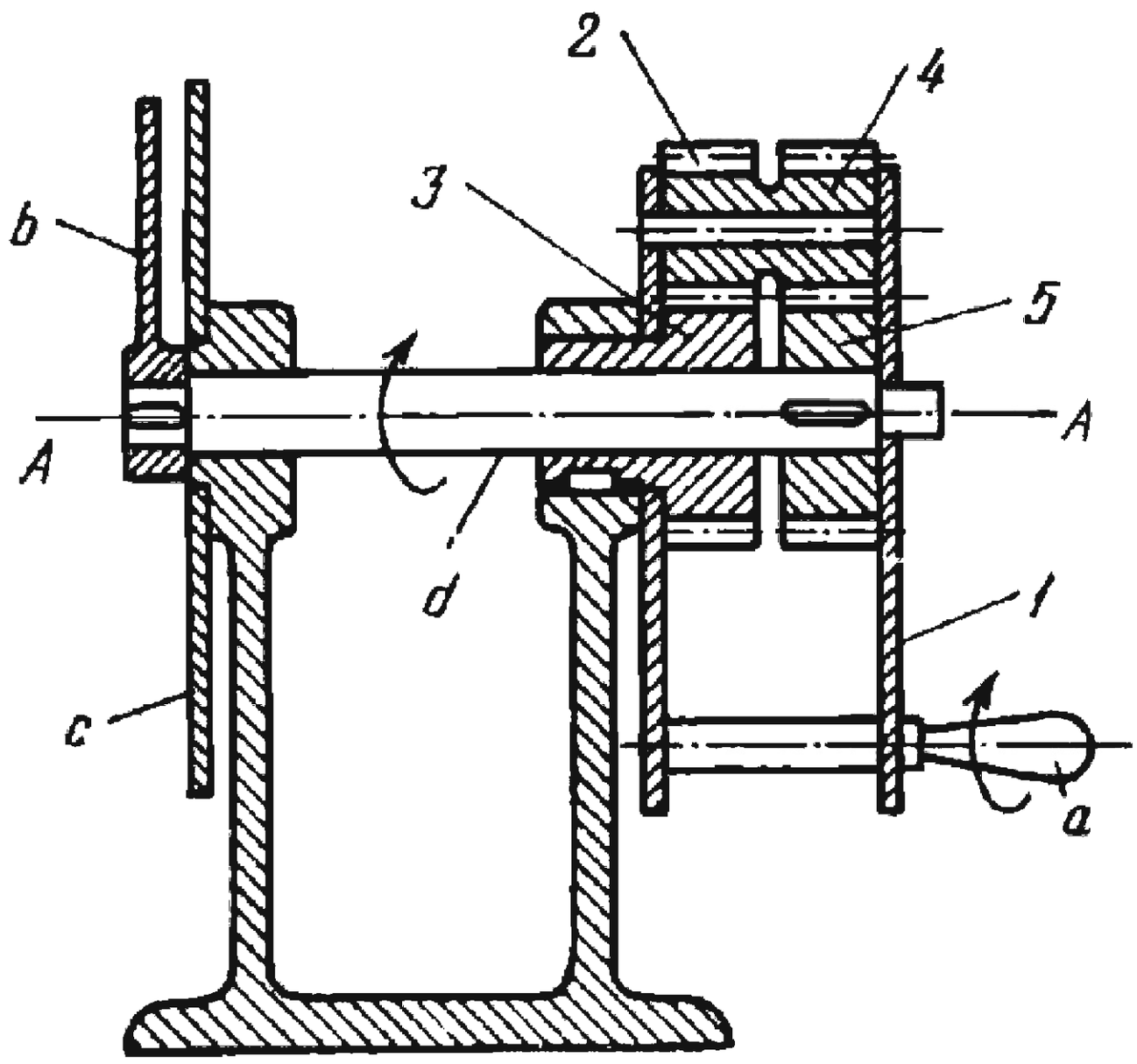

Carrier *1*, with handle *a*, rotates about fixed axis *A-A* and is connected by a turning pair to planet gears *2* and *4* which are rigidly attached together. Gear *2* meshes with fixed sun gear *3* and gear *4* meshes with gear *5* which rotates about axis *A-A*. Gear *5* and hand *b* are keyed to shaft *d*.The gears have the following numbers of teeth: $z_2 = z_5 = 20$ and $z_4 = z_3 = 19$. Then the transmission ratio is

$$i_{51} = 1 - \frac{z_4 z_3}{z_5 z_2} = 1 - \frac{19 \times 19}{20 \times 20} = \frac{39}{400} \cong \frac{1}{10}.$$

Thus hand *b* makes one revolution for every ten revolutions of carrier *1*. The angle of rotation of hand *b* can be read off on dial *c*.

2878	PLANETARY REDUCING GEAR MECHANISM WITH AN ANNULAR CARRIER	CxG PR

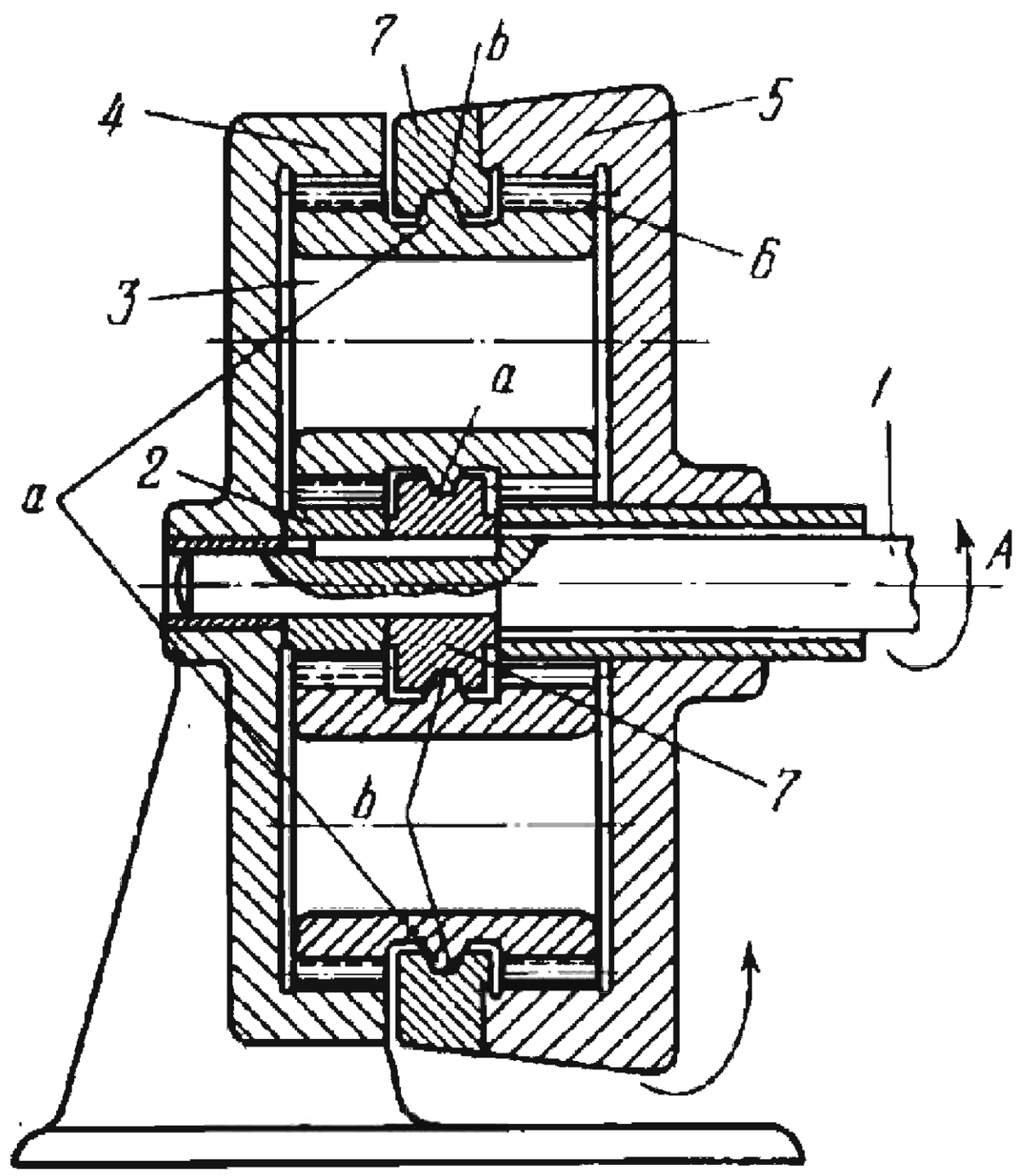

Gear *2* is keyed to shaft *1*, rotates about fixed axis *A* and meshes with planet gears *3*. Each gear *3* is rigidly attached to (or integral with) a planet gear *6*. Gears *3* and *6* have an annular projection *a* which enters grooves *b* in internal gear *5* and in ring *7* which is keyed to shaft *1*. Annular projection *a* rolls and slides in grooves *b* and thereby takes the place of the carrier in the planetary mechanism. Planet gears *3* mesh with fixed internal gear *4*, and planet gears *6* with internal gear *5* which rotates about axis *A*. The numbers of teeth of gears *3*, *4*, *5* and *6* are related by the conditions

$$z_3 = z_6 - 1 \quad \text{and} \quad z_5 = z_4 + 1.$$

Besides, for links *2* and *5* to be coaxial, the numbers of teeth of gears *2*, *3*, *4*, *5* and *6* should satisfy the conditions (if the gears have the same module):

$$z_2 + 2z_3 = z_4 \quad \text{and} \quad z_5 - z_6 = z_4 - z_3.$$

The speeds n_2 and n_5 of gears *2* and *5* satisfy the condition

$$n_5 = n_2 \frac{z_2 z_3 z_5 - z_2 z_4 z_6}{z_2 z_3 z_5 + z_3 z_4 z_5}$$

where z_2, z_3, z_4, z_5 and z_6 are the numbers of teeth of gears *2*, *3*, *4*, *5* and *6*. Gears *2* and *5* rotate in the same direction.

2879	PLANETARY REVERSIBLE GEARING MECHANISM WITH TWO BRAKE DRUMS	CxG PR

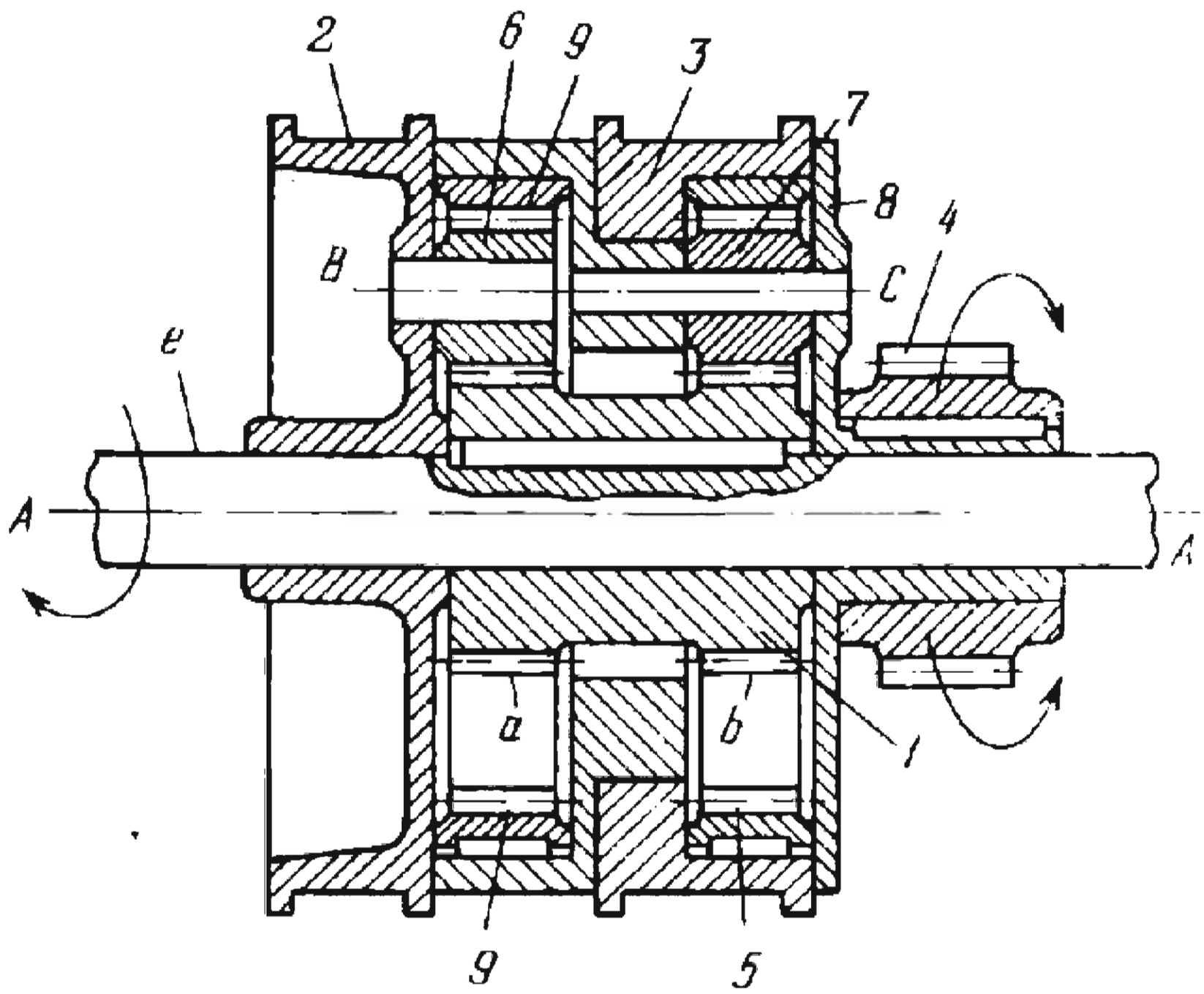

Gear *1* is keyed to shaft *e*, rotates about fixed axis *A-A* and has two toothed rims *a* and *b* with equal numbers of teeth. Rim *a* meshes with planet gear *6*, and rim *b* with planet gear *7*. Gear *6* rotates about axis *B* on a stud carried by brake drum *2* and meshes with internal gear *9*. Gear *7* rotates about axis *C* on a pin of carrier *8* and meshes with internal gear *5* of brake drum *3*. Internal gear *9* is keyed to carrier *8*. Driven gear *4* is keyed to carrier *8* and rotates about axis *A-A* on shaft *e*. The numbers of teeth of gears *5*, *6*, *7* and *9* should satisfy the conditions: $z_6 = z_7$ and $z_5 = z_9$. The speeds n_4 and n_1 of gears *4* and *1* are related, for the case of forward rotation when a braking force is applied to drum *2*, by the equation

$$n_4 = n_1 \frac{z_1}{z_1 + z_5}.$$

For reverse rotation, when a braking force is applied to drum *3*,

$$n_4 = -n_1 \frac{z_1}{z_5}$$

where z_1, z_5, z_6, z_7 and z_9 are the numbers of teeth of gears *1*, *5*, *6*, *7* and *9*.

2880	PLANETARY REDUCING GEAR MECHANISM WITH A PARALLEL-CRANK DRIVE	CxG PR

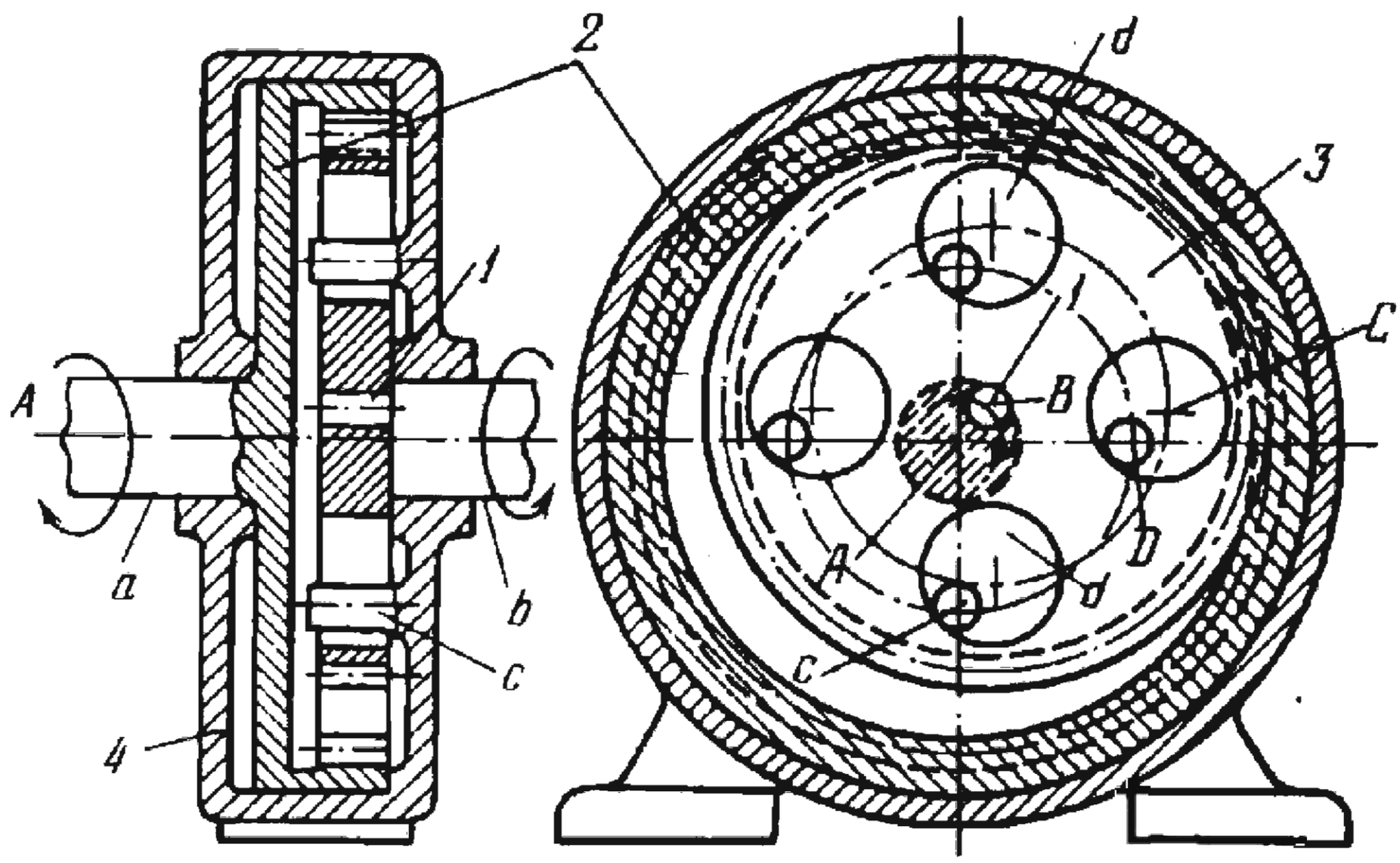

Crank *1* rotates about fixed axis *A* of shaft *b* and is connected by a turning pair to gear *3*. Gear *3* has four symmetrically located round holes *d* of a radius equal to the throw of crank *1* plus the radius of its pin. Pins *c* are rigidly attached to fixed housing *4* and enter holes *d*. Pins *c* are of the same diameter as crankpin *1*. Thus, the dimensions of the mechanism satisfy the conditions

$$\overline{AB} = \overline{DC} \quad \text{and} \quad \overline{AD} = \overline{BC}.$$

Figure *ABCD* is a parallel-crank linkage. Identical linkages are formed by the other pins *c* and holes *d*. Since gear *3* is the connecting rod of linkage *ABCD*, it has circular translational motion and all of its points describe circles of radius $\overline{AB}$. Gear *3* meshes with internal gear *2* which is rigidly mounted on shaft *a* and rotates about axis *A*. The speeds n_1 and n_2 of crank *1* and gear *2* (in rpm) satisfy the condition

$$n_2 = n_1 \frac{z_2 - z_3}{z_2}$$

where z_2 and z_3 are the numbers of teeth of gears *2* and *3*. Shafts *a* and *b* rotate in the same direction. If there is only a small difference between the numbers of teeth z_2 and z_3, the reducing gear transmits rotation with a very high transmission ratio.

2881	PLANETARY GEARING MECHANISM OF A TWO-STEP DRIVE PULLEY	CxG PR

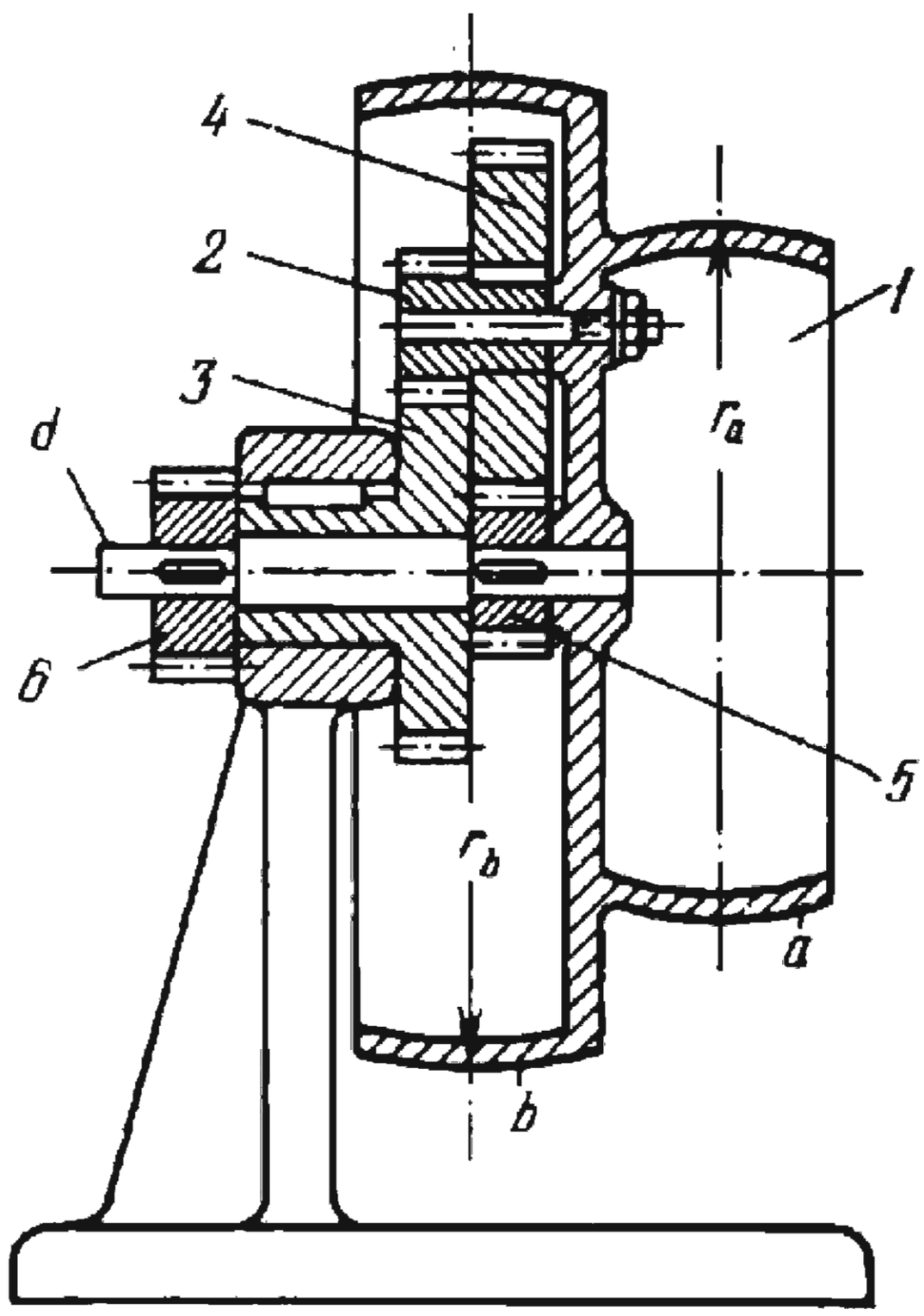

Drive pulley *1* consists of two rigidly attached (or integral) steps *a* and *b* of radii r_a and r_b. This pulley is the carrier of a planetary mechanism and is connected by a turning pair to planet gears *2* and *4* which are rigidly attached together. Planet gear *2* meshes with fixed sun gear *3*; planet gear *4* meshes with gear *5* which, together with driven gear *6*, are keyed to shaft *d*. The speeds n_1 and n_6 of pulley *1* and gear *6* (in rpm) are related by the equation

$$n_6 = -n_1 \frac{z_3 z_4 - z_2 z_5}{z_2 z_5}$$

where z_2, z_3, z_4 and z_5 are the numbers of teeth of gears *2*, *3*, *4* and *5*. Pulley *1* and gear *6* rotate in opposite directions. The driving belt can be shifted to either step *a* or *b* of the pulley, obtaining angular velocities of ω_a or ω_b for gear *6* which are related by the condition

$$\frac{\omega_a}{\omega_b} = \frac{r_b}{r_a}.$$

2882	FOUR-LINK PLANETARY REDUCING GEAR MECHANISM WITH AN IDLER PLANET GEAR	CxG PR

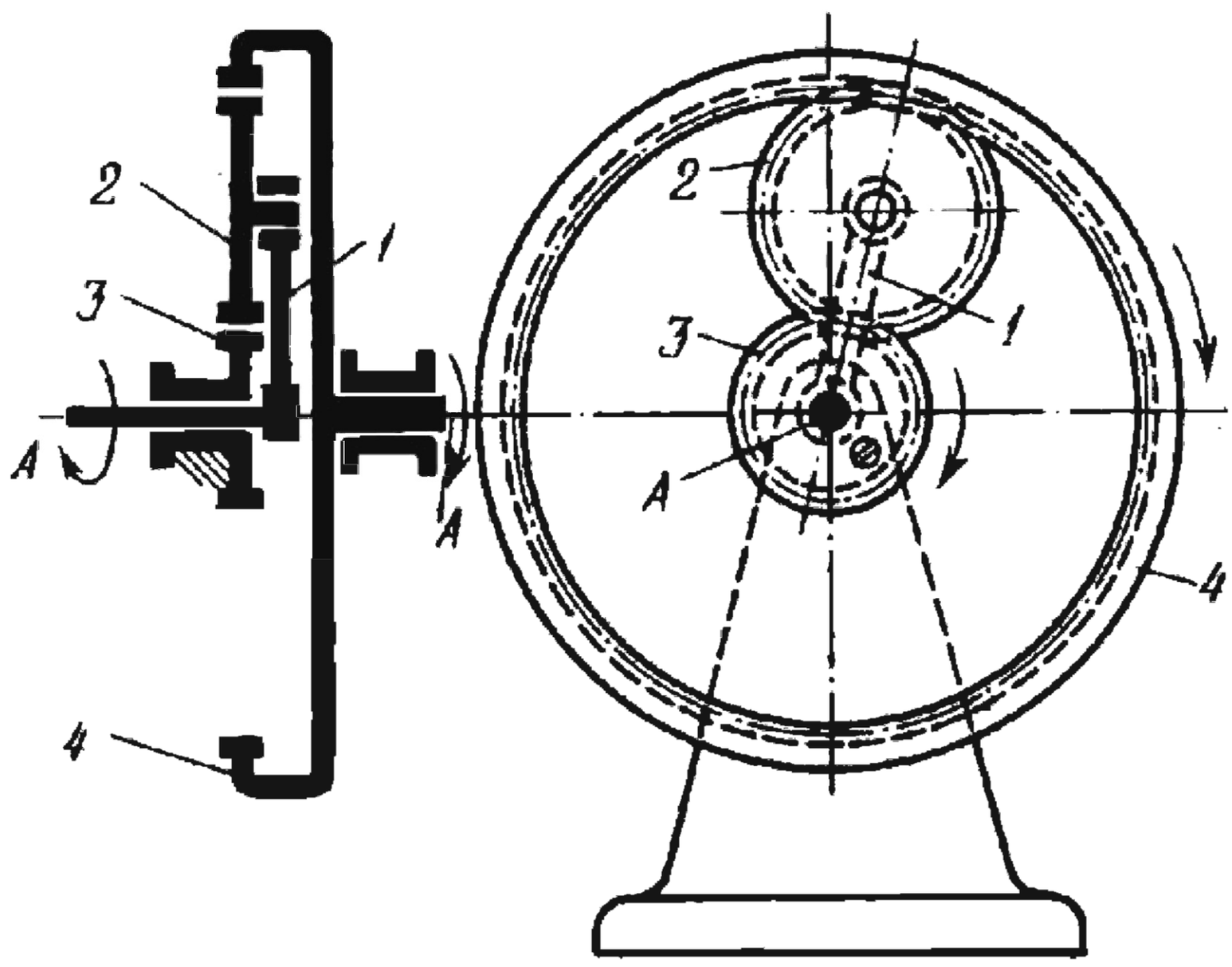

Carrier *1* rotates about fixed axis *A* and is connected by a turning pair to planet gear *2* which meshes with internal gear *4* and with fixed external gear *3*. When carrier *1* rotates, gear *2* rolls around gear *3*, rotating gear *4* about axis *A*. For gears *3* and *4* to be coaxial, the numbers of teeth of gears *2*, *3* and *4* should satisfy the condition

$$z_4 = z_3 + 2z_2.$$

The speeds n_1 and n_4 of carrier *1* and gear *4* (in rpm) satisfy the condition

$$n_4 = n_1 \frac{z_3 + z_4}{z_4}$$

where z_3 and z_4 are the numbers of teeth of gears *3* and *4*. Carrier *1* and gear *4* rotate in the same direction.

2883	PLANETARY GEARING MECHANISM OF A DRIVE PULLEY MOUNTED ON THE CARRIER	CxG PR

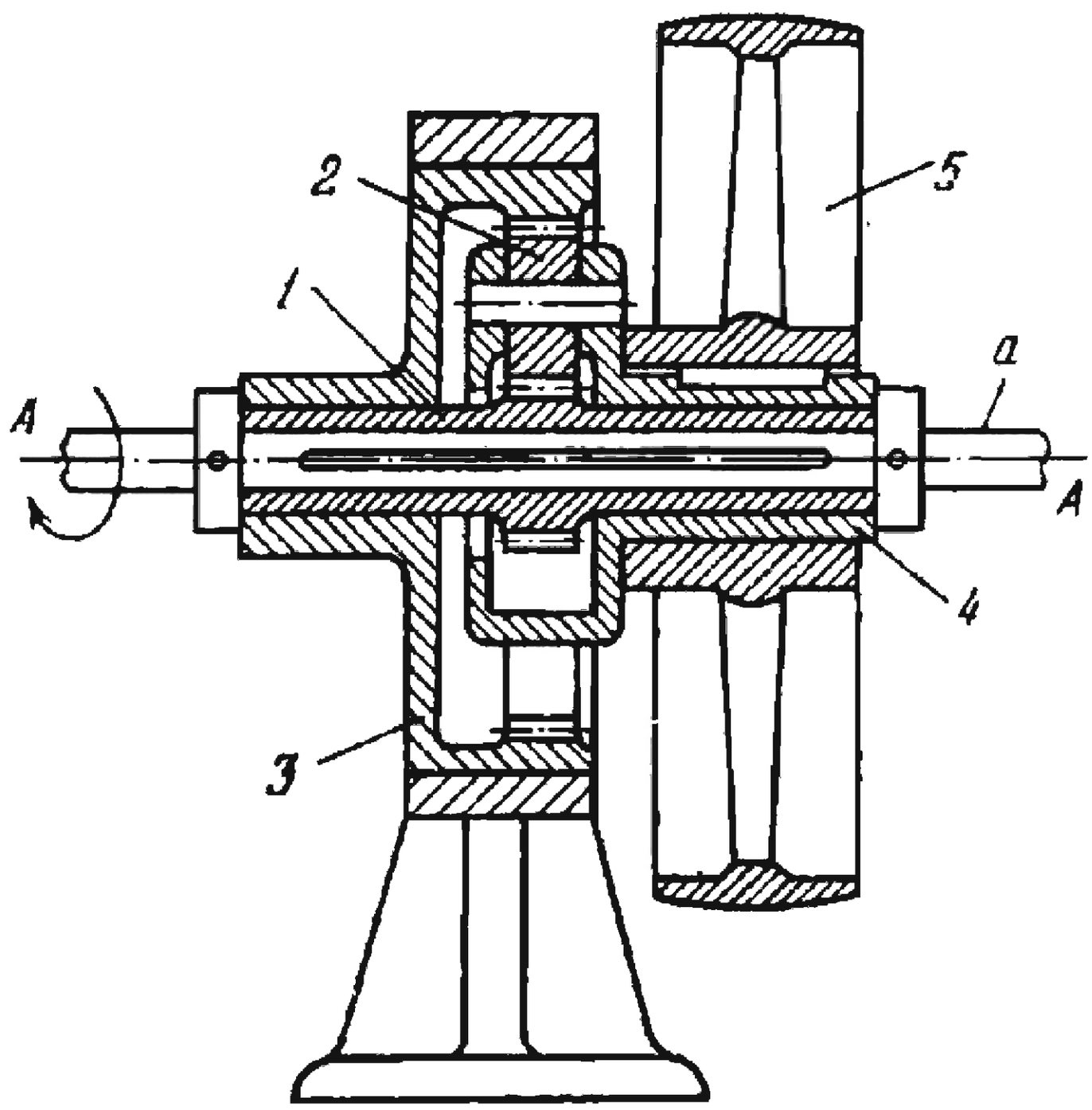

Gear *1* is keyed to shaft *a*, rotates about fixed axis *A-A* and meshes with planet gear *2* which is connected by a turning pair to carrier *4*. Drive pulley *5* is keyed to carrier *4* and rotates about axis *A-A*. Planet gear *2* meshes with fixed internal gear *3*. When gear *1* rotates, gear *2* rolls around inside gear *3* and rotates pulley *5* about axis *A-A*. The numbers of teeth of gears *1*, *2* and *3* satisfy the conditions: $z_1 = z_2$ and $z_3 = 3z_1$. Then the speeds n_1 and n_5 of gear *1* and pulley *5* (in rpm) satisfy the condition

$$n_5 = \frac{n_1}{4}$$

i.e. drive pulley *5* rotates in the same direction as gear *1* but at an angular velocity only one-fourth that of the gear.

2884	PLANETARY GEARING MECHANISM OF A THREE-STEP DRIVE PULLEY	CxG PR

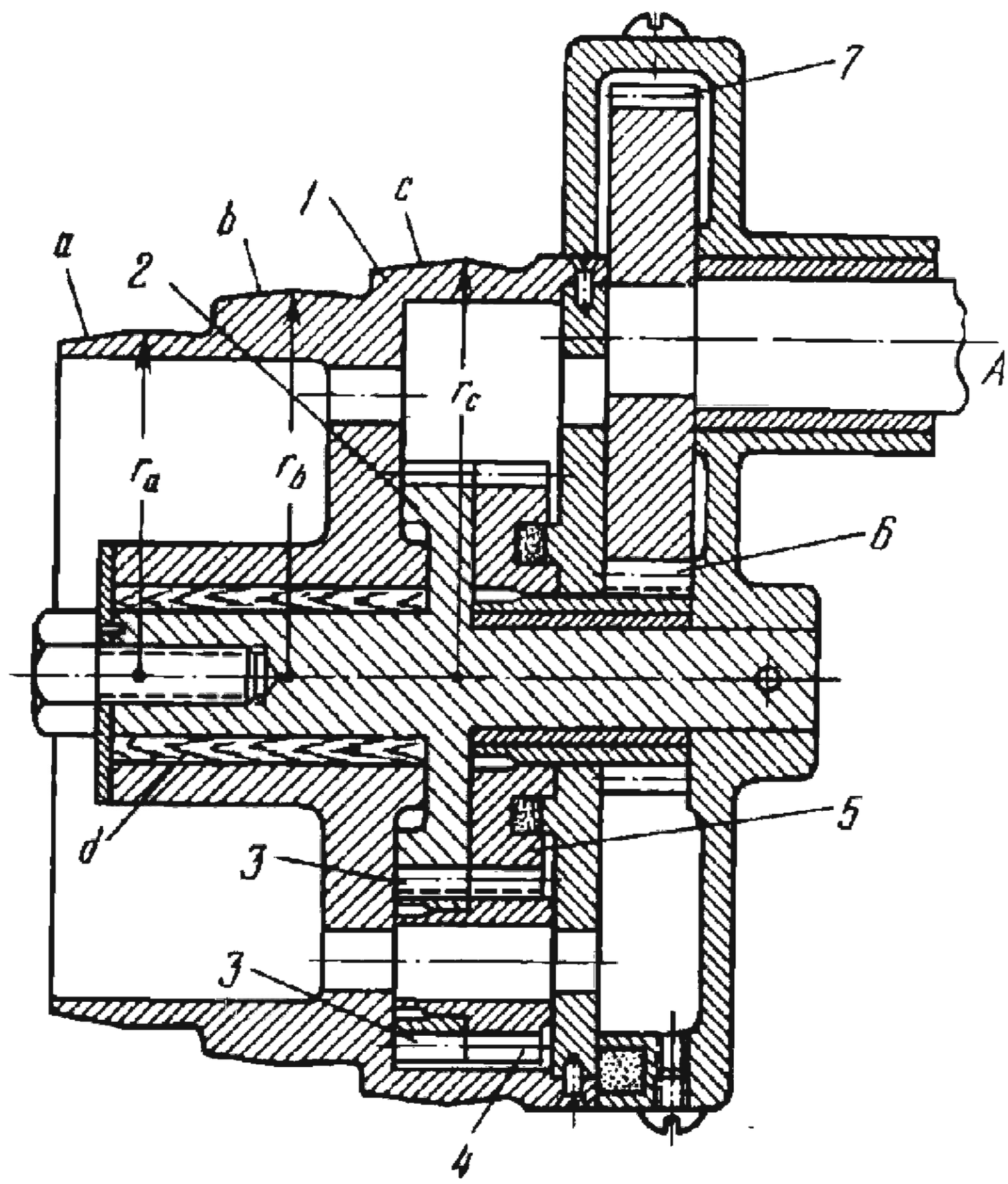

Drive pulley *1* consists of three rigidly attached (or integral) steps *a*, *b* and *c* of radii r_a, r_b and r_c. This pulley is the carrier of a planetary mechanism and is connected by turning pairs to planet gears *3* and *4* which are rigidly attached together. Planet gear *3* meshes with fixed sun gear *2* on whose hub *d* pulley *1* rotates. Planet gear *4* meshes with gear *5* which is rigidly attached to gear *6*. Gear *6* meshes with gear *7* which rotates about fixed axis *A*. The speeds n_1 and n_7 of pulley *1* and gear *7* (in rpm) are related by the equation

$$n_7 = -n_1 \frac{z_6}{z_7} \left(\frac{z_5 z_3 - z_4 z_2}{z_5 z_3} \right)$$

where z_2, z_3, z_4, z_5, z_6 and z_7 are the numbers of teeth of gears *2*, *3*, *4*, *5*, *6* and *7*. Gear *7* may rotate in either direction depending upon the numbers of teeth of the gears. The driving belt can be shifted to step *a*, *b* or *c* of the pulley, obtaining angular velocities of ω_a, ω_b or ω_c for gear *7* which are related by the condition

$$\omega_a r_a = \omega_b r_b = \omega_c r_c.$$

2885	PLANETARY DOUBLE REDUCING GEAR MECHANISM WITH INTERNAL GEARS	CxG PR

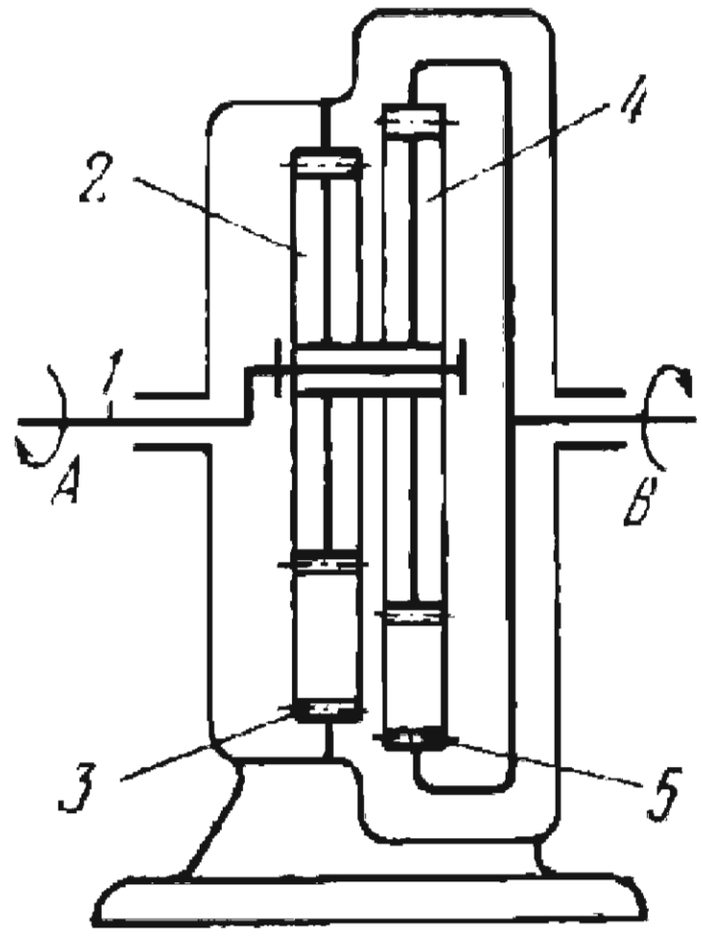

Carrier *1* rotates about fixed axis *A* and is connected by a turning pair to rigidly attached planet gears *2* and *4*. Gear *2* meshes with fixed internal gear *3*; gear *4* meshes with internal gear *5* which rotates about fixed axis *B*. If the numbers of teeth of gears *2*, *3*, *4* and *5* satisfy the condition $z_4 > z_2$ and $z_5 > z_3$, then the speeds n_1 and n_5 of carrier *1* and gear *5* (in rpm) are related by the equation

$$n_5 = -n_1 \frac{z_3 z_4 - z_2 z_5}{z_2 z_5}$$

where z_2, z_3, z_4 and z_5 are the numbers of teeth of gears *2*, *3*, *4* and *5*. Carrier *1* and gear *5*, in this case, rotate in opposite directions.

2886	PLANETARY DOUBLE REDUCING GEAR MECHANISM WITH BEVEL GEARS	CxG PR

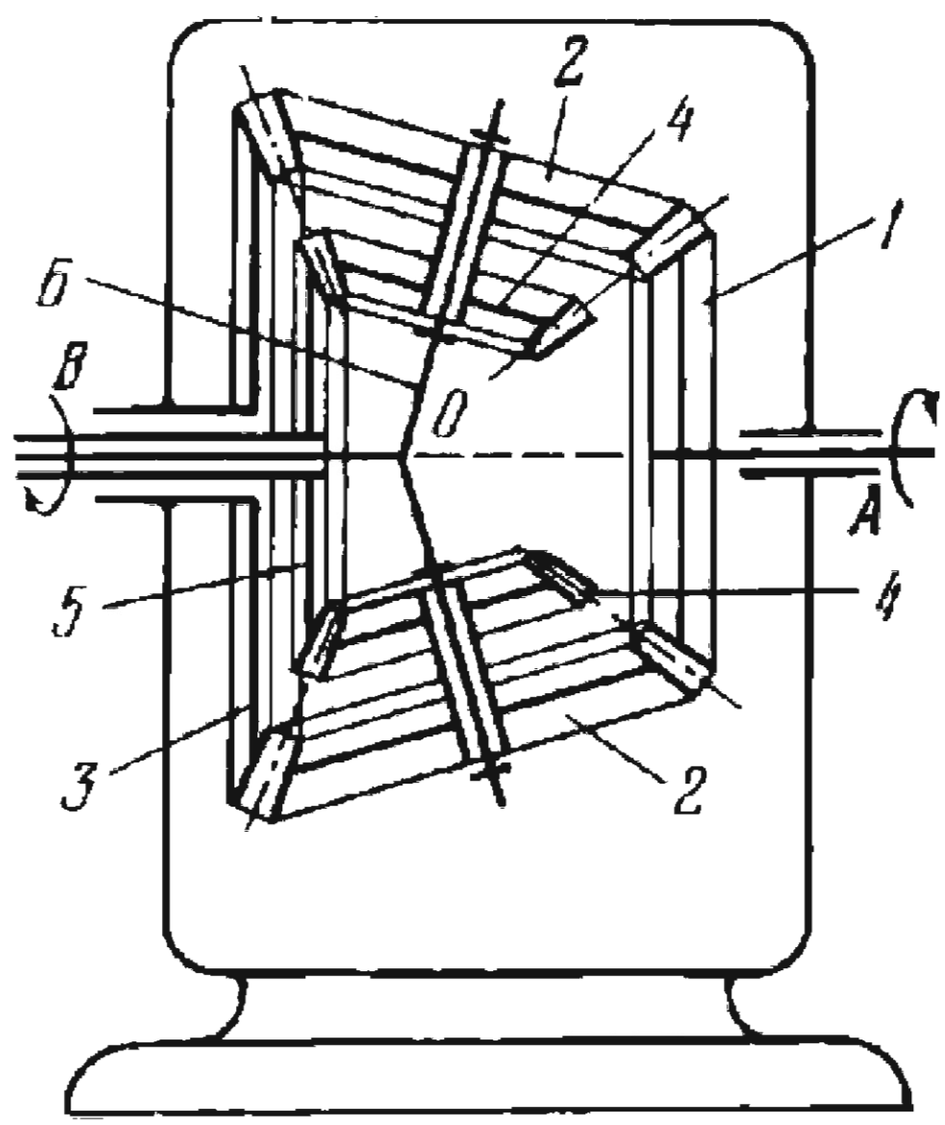

Bevel gear *1* rotates about fixed axis *A* and meshes with bevel planet gears *2* which are rigidly attached to bevel planet gears *4*. Planet gears *2* and *4* are connected by turning pairs to carrier *6* which rotates about fixed axis *B*. Gears *2* mesh with fixed bevel sun gear *3*; gears *4* mesh with bevel gear *5* which rotates about axis *B*. The speeds n_1 and n_5 of gears *1* and *5* (in rpm) are related by the equation

$$n_5 = -n_1 \frac{z_1}{z_2} \frac{z_2 z_5 + z_3 z_4}{z_1 z_5 + z_3 z_5}$$

where z_1, z_2, z_3, z_4 and z_5 are the numbers of teeth of gears *1*, *2*, *3*, *4* and *5*. Gears *1* and *5* rotate in opposite directions.

2887	PLANETARY GEARING MECHANISM WITH WORM GEARING	CxG PR

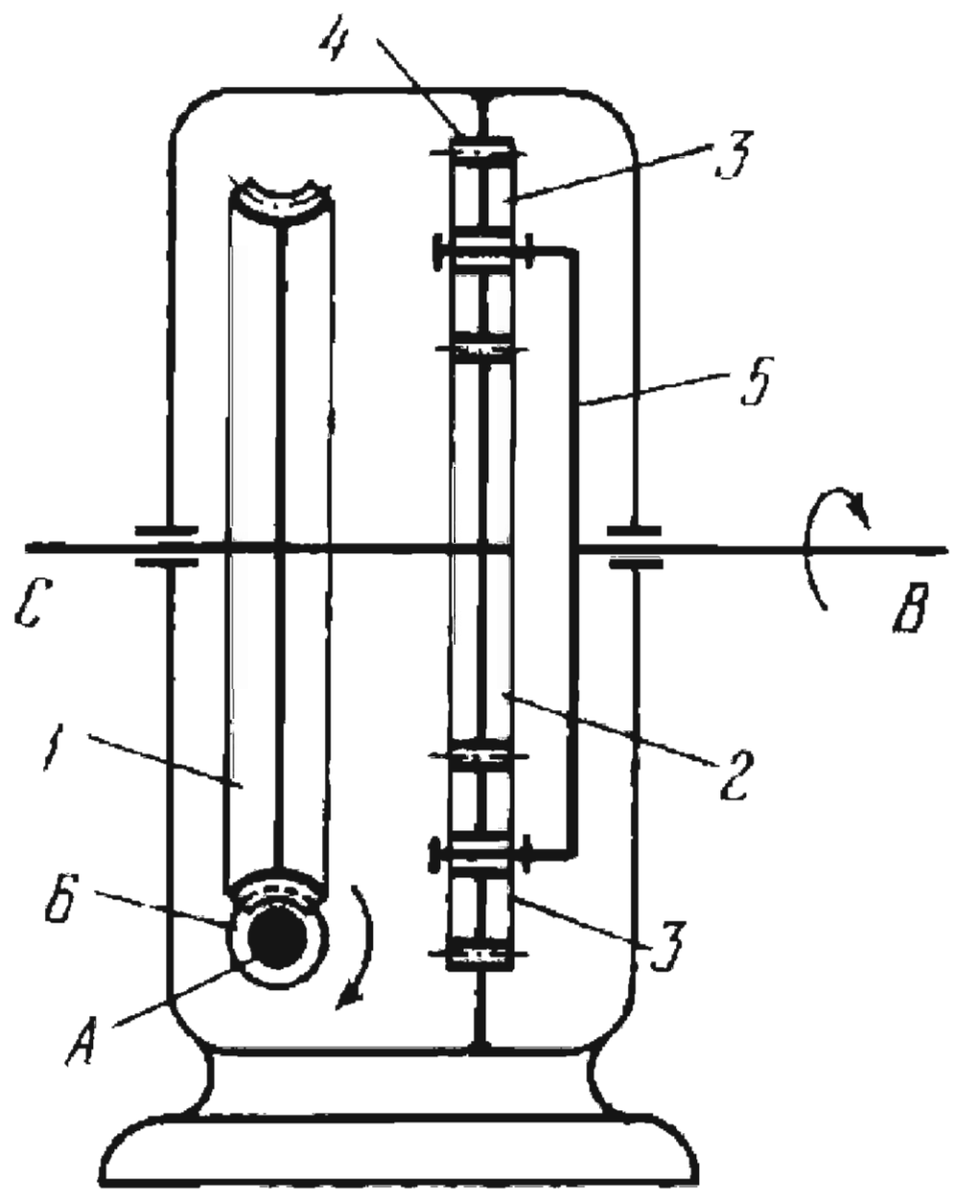

Worm *6* rotates about fixed axis *A*, perpendicular to the plane of the drawing, and meshes with worm wheel *1* which is keyed to shaft *C*. Also keyed to shaft *C* is gear *2* which meshes with planet gears *3*. Gears *3* mesh with fixed internal gear *4* and are connected by turning pairs to carrier *5* which is keyed to shaft *B*. The speeds n_6 and n_5 of worm *6* and carrier *5* (in rpm) are related by the equation

$$n_5 = n_6 \frac{z_6}{z_1} \frac{z_2}{z_2 + z_4}$$

where z_1 is the number of teeth of worm wheel *1*, z_6 is the number of threads (starts) of worm *6*, and z_2 and z_4 are the numbers of teeth of gears *2* and *4*.

2888	PLANETARY HIGH-RATIO REDUCING GEAR MECHANISM	CxG PR

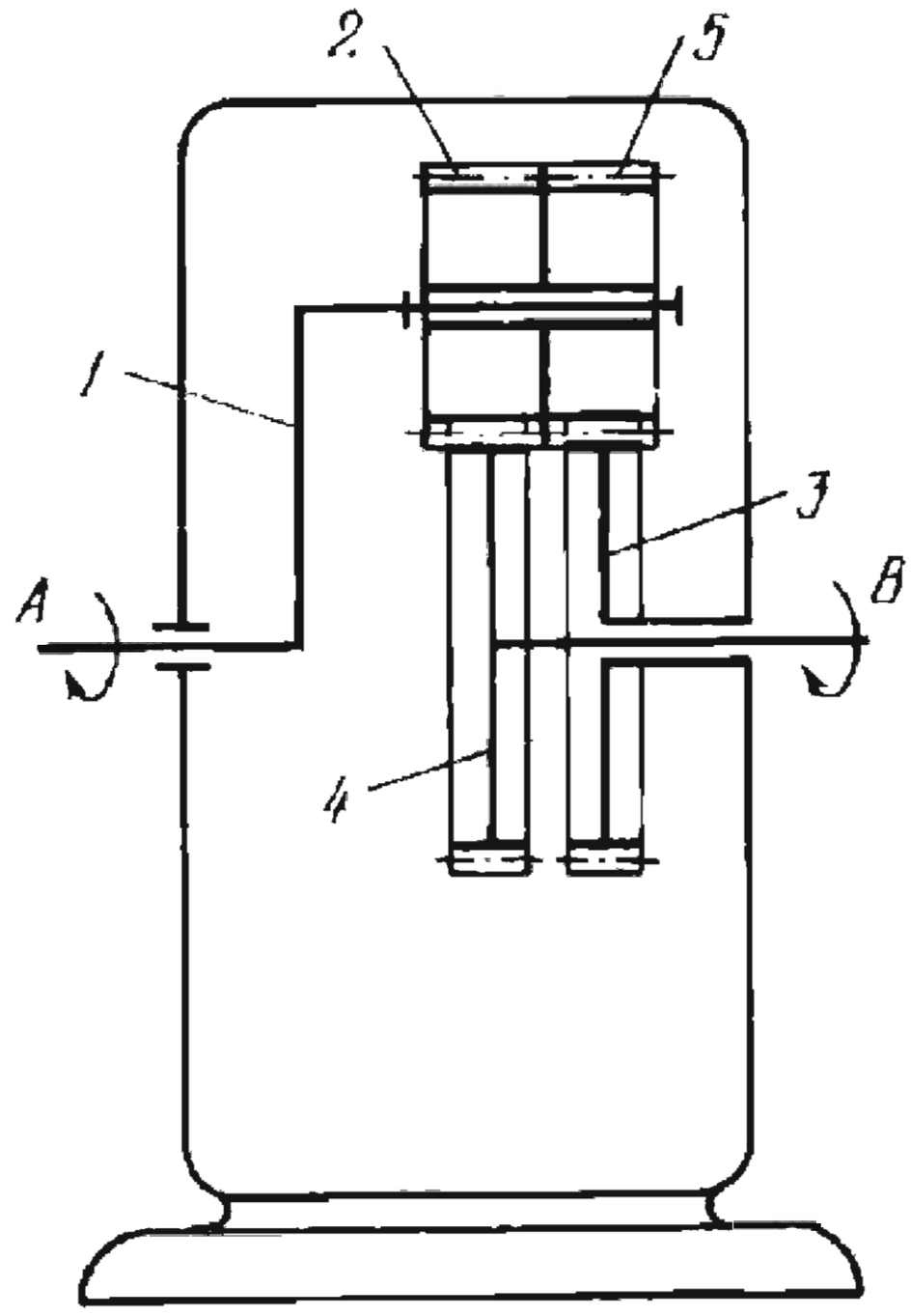

Carrier *1* rotates about fixed axis *A* and is connected by a turning pair to rigidly attached planet gears *2* and *5*. Gear *2* meshes with gear *4* which rotates about fixed axis *B*; gear *5* meshes with fixed sun gear *3*. The numbers of teeth of gears *2*, *3*, *4* and *5* are related by the conditions:

$$z_4 = z_3 + 1 \quad \text{and} \quad z_5 = z_2 + 1.$$

The speeds n_1 and n_4 of carrier *1* and gear *4* (in rpm) are related by the equation

$$n_4 = n_1 \left(1 - \frac{z_2 z_3}{z_4 z_5}\right) = n_1 \left[1 - \frac{z_2 z_3}{(z_3+1)(z_2+1)}\right]$$

where z_2, z_3, z_4 and z_5 are the numbers of teeth of gears *2*, *3*, *4* and *5*. Thus, when carrier *1* rotates at high speed, gear *4* rotates at a much lower speed in the same direction.

2889	PLANETARY GEARING MECHANISM WITH TWO DRIVEN LINKS	CxG PR

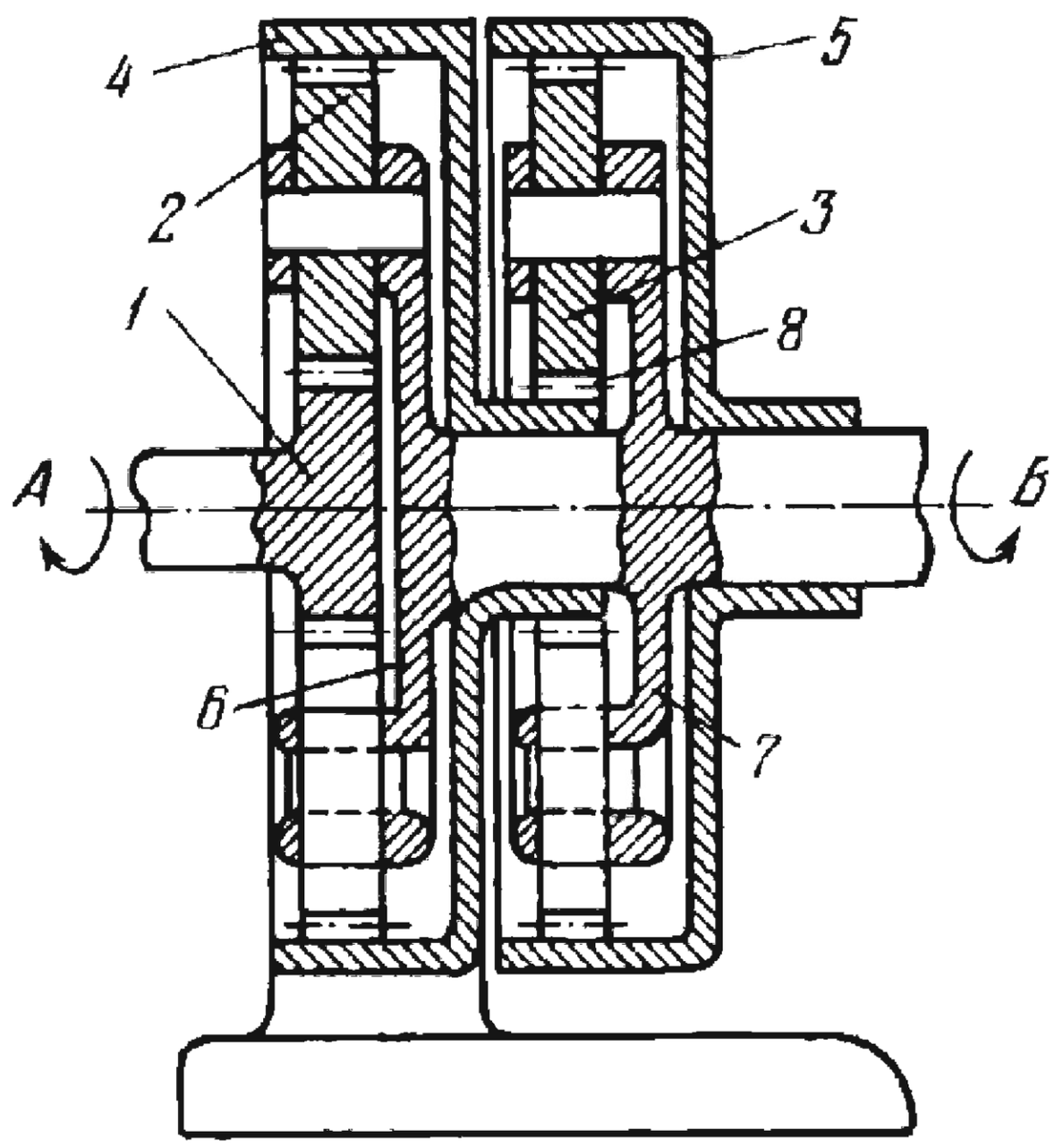

Gear *1* is keyed to (or integral with) shaft *A* and meshes with planet gears *2* which, in turn, mesh with fixed internal gear *4*. Carriers *6* and *7* are keyed to shaft *B*. Planet gears *3* mesh with fixed sun gear *8* and with internal gear *5* which rotates freely about shaft *B*. Thus, driving shaft *A* transmits rotation in the same direction to two driven links, shaft *B* and gear *5*. The speeds n_1, n_5 and n_7 of gears *1* and *5* and carrier *7* (in rpm) are related by the equations

$$n_5 = n_1 \frac{z_1}{z_5} \frac{z_5 + z_8}{z_1 + z_4} \quad \text{and} \quad n_7 = n_1 \frac{z_1}{z_1 + z_4}$$

where z_1, z_4, z_5 and z_8 are the numbers of teeth of gears *1*, *4*, *5* and *8*.

2890	PLANETARY GEARING MECHANISM WITH A TOOTHED CLUTCH	CxG PR

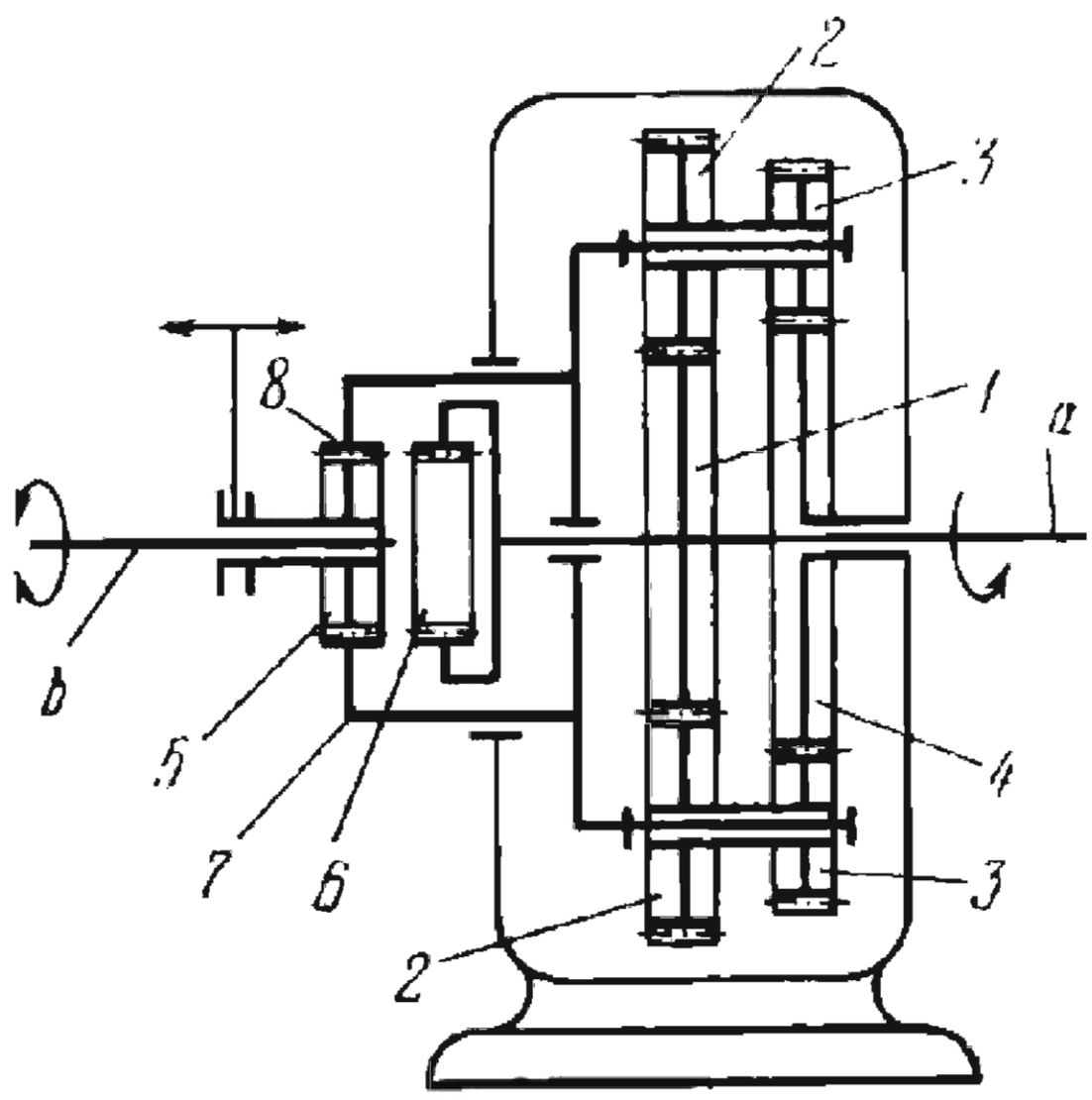

Gear *1* is keyed to shaft *a* and meshes with planet gears *2*. Planet gears *3* are rigidly attached to gears *2* and mesh with fixed sun gear *4*. Toothed clutch member *6* with internal teeth is keyed to shaft *a*. Clutch member *8*, also with internal teeth, belongs to carrier *7* which rotates freely on shaft *a* and carries planet gears *2* and *3*. Clutch member *5* has external teeth and slides along a key on shaft *b* so that it can be shifted into engagement with either clutch member *6* or *8*. When shaft *a* rotates, shaft *b* can rotate in either the forward or reverse direction depending upon which clutch member, *6* or *8*, member *5* is engaged with. In the position shown, rotation is transmitted from shaft *a* through gear *1* to planet gears *2* and *3*. Gear *3* rolls around fixed sun gear *4*, rotating carrier *7*, and, through clutch members *8* and *5*, shaft *b*. When member *5* is shifted to engage member *6*, rotation is transmitted directly from shaft *a* to shaft *b* which, of course, then rotates at the same speed and in the same direction as shaft *a*.

2891	TRIPLE PLANETARY REDUCING GEAR MECHANISM	CxG PR

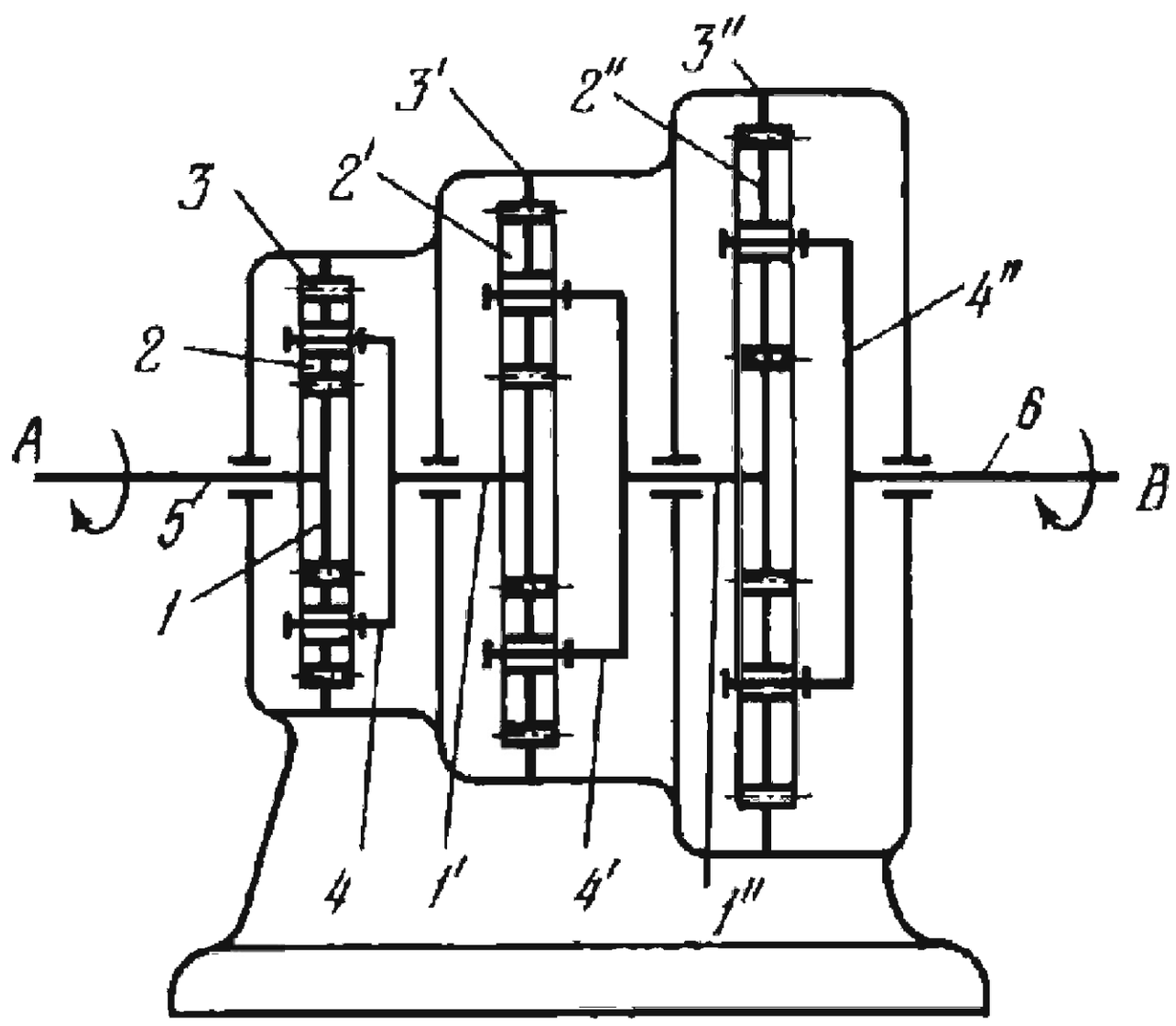

Each stage of the mechanism consists of a rotary sun gear, *1*, *1'* or *1''*; symmetrically located planet gears, *2*, *2'* or *2''*; a fixed internal gear, *3*, *3'* or *3''*; and a carrier, *4*, *4'* or *4''*. The planet gears mesh with the corresponding sun gears and fixed internal gears. The carriers are connected by turning pairs to the corresponding planet gears. Sun gear *1* is keyed to shaft *5*. Carrier *4* is rigidly attached to sun gear *1'*; carrier *4'* to sun gear *1''* and carrier *4''* is keyed to shaft *6*. When gear *1* rotates about fixed axis *A*, carrier *4''* rotates in the same direction about fixed axis *B*. The speeds n_1 and $n_{4''}$ of gear *1* and carrier *4''* (in rpm) satisfy the equation

$$i_{14''}=\frac{n_1}{n_{4''}}=i_{14}\times i_{1'4'}\times i_{1''4''}=$$

$$=\left(1+\frac{z_3}{z_1}\right)\left(1+\frac{z_{3'}}{z_{1'}}\right)\left(1+\frac{z_{3''}}{z_{1''}}\right)$$

where z_1, $z_{1'}$, $z_{1''}$, z_3, $z_{3'}$ and $z_{3''}$ are the numbers of teeth of gears *1*, *1'*, *1''*, *3*, *3'* and *3''*.

2892	PLANETARY GEARING MECHANISM WITH NONCIRCULAR GEARS	CxG PR

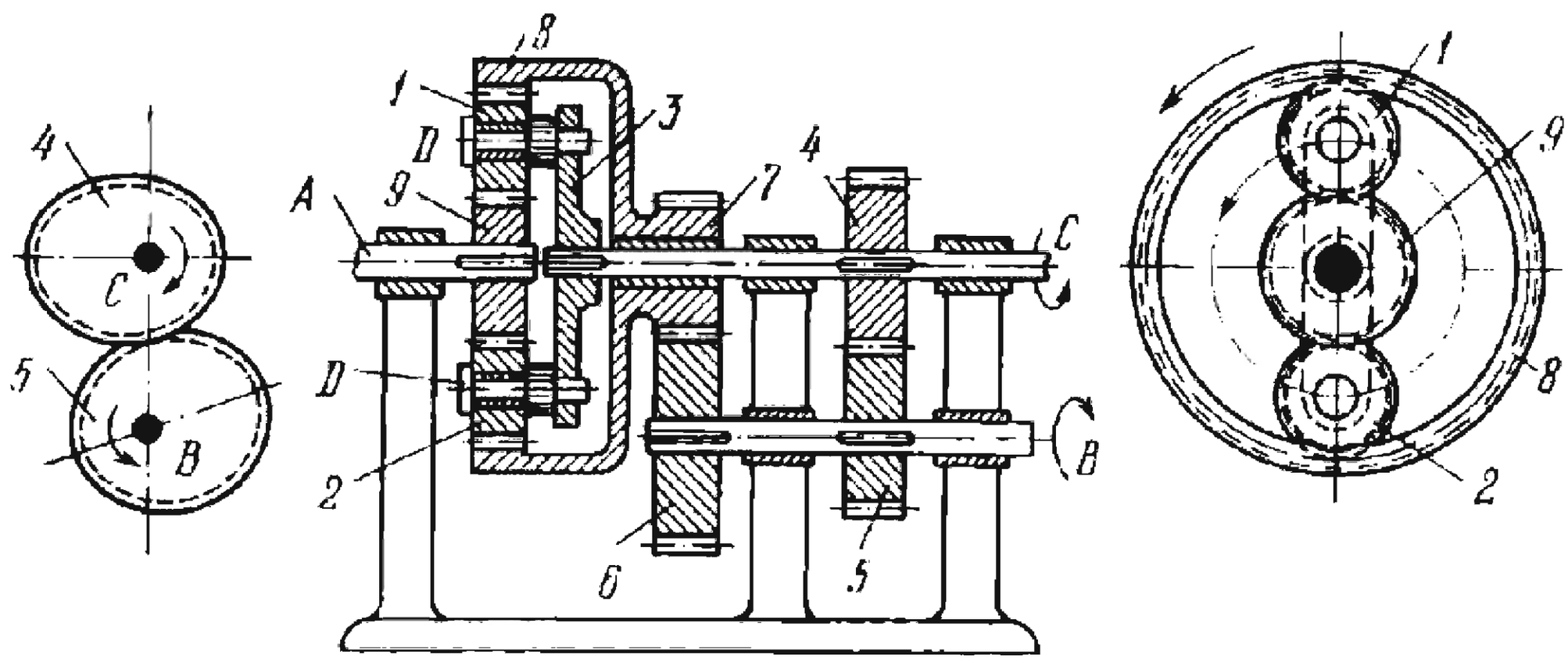

Noncircular gear *5* and circular gear *6* are keyed to shaft *B*. Gear *5* meshes with noncircular gear *4* which is keyed to shaft *C*. Gear *6* meshes with gear *7* which rotates freely about shaft *C*. Gear *7* is rigidly attached to internal gear *8*. Carrier *3* is keyed to shaft *C* and is connected by turning pairs *D* to planet gears *1* and *2*. Gears *1* and *2* mesh with internal gear *8* and with sun gear *9* which is keyed to shaft *A*. When shaft *B* or *C* rotates with uniform velocity, shaft *A* rotates with nonuniform velocity.

2893	PLANETARY REVERSIBLE REDUCING GEAR MECHANISM	CxG PR

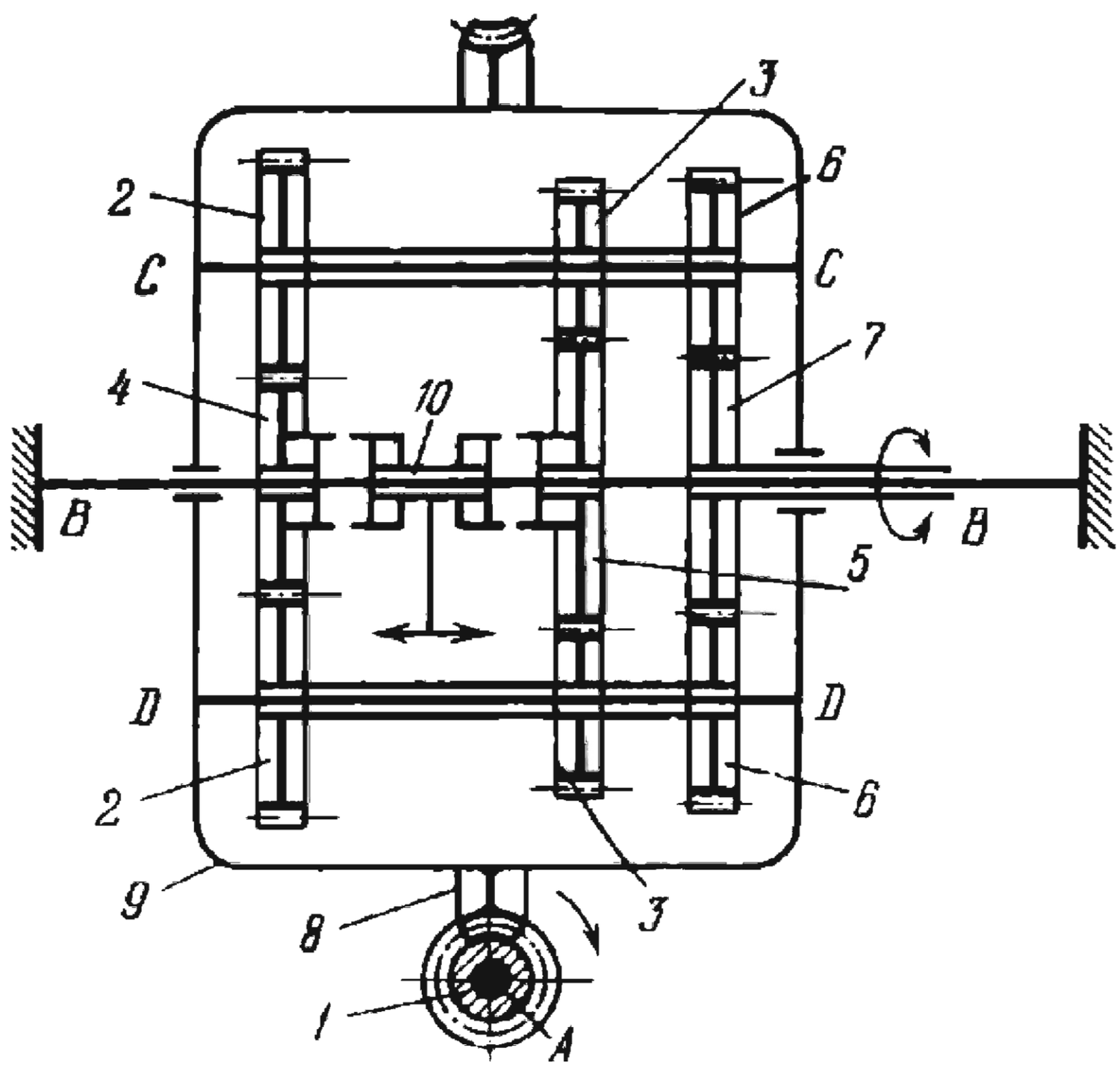

Worm *1* rotates about fixed axis *A* and meshes with worm wheel *8* of carrier *9* which is designed in the form of a housing that rotates about fixed axis *B-B*. Planet gears *2*, *3* and *6*, rigidly attached to one another, rotate about axes *C-C* and *D-D* of carrier *9*. Gears *2* mesh with gear *4*, gears *3* with gear *5* and gears *6* with gear *7*. Gears *4*, *5* and *7* rotate freely about axis *B-B*, but either gear *4* or *5* can be stopped by engaging it with clutch *10*. This provides forward and reverse rotation of driven gear *7*. The numbers of teeth of gears *2*, *3*, *4*, *5*, *6* and *7* satisfy the conditions: $z_4 = z_2$ and $z_5 > z_7 > z_2 > z_6 > z_3$. The speeds n_1 and n_7 of worm *1* and gear *7* (in rpm) satisfy the equation

$$n_7 = n_1 \frac{z_1}{z_8} \frac{z_7 - z_6}{z_7}$$

for forward rotation, and

$$n_7 = -n_1 \frac{z_1}{z_8} \frac{z_6 z_5 - z_7 z_3}{z_7 z_2}$$

for reverse rotation, where z_1 is the number of threads (starts) of worm *1*, z_8 is the number of teeth of worm wheel *8*, and z_2, z_3, z_4, z_5, z_6 and z_7 are the numbers of teeth of gears *2*, *3*, *4*, *5*, *6* and *7*.

2894	PLANETARY INTERMITTENT GEARING MECHANISM	CxG PR

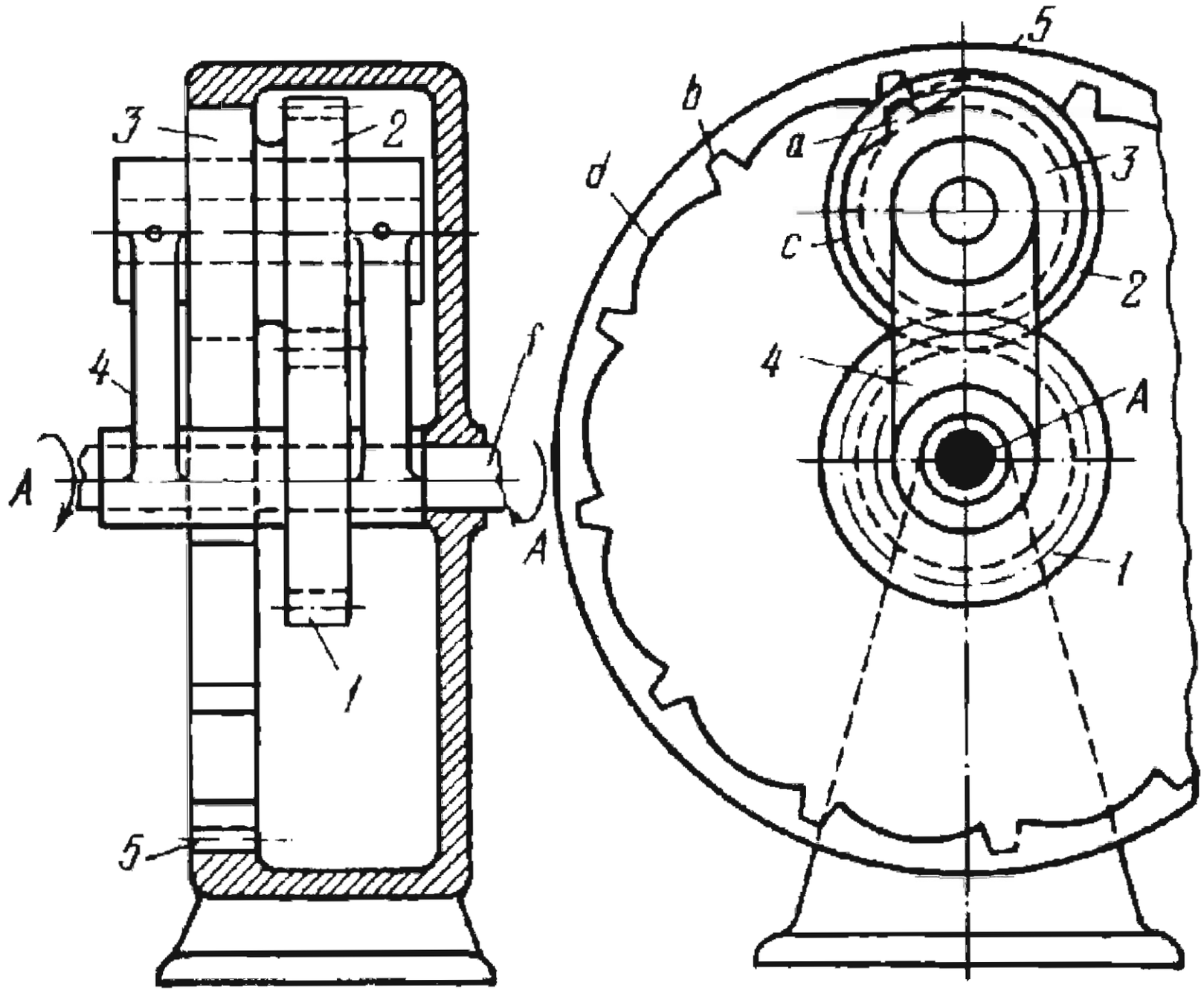

Driving gear *1* is keyed to shaft *f*, rotates about fixed axis *A-A* and meshes with planet gear *2* which is integral with planet gear *3*. Gear *3* has a single tooth *a* which engages tooth spaces *b* of fixed internal gear *5*. Gear *3* has concentric locking surface *c* which engages concave locking surfaces *d* of gear *5*. Planet gears *2* and *3* are connected by a turning pair to carrier *4* which rotates about axis *A-A*. Carrier *4* rotates only during the periods when tooth *a* of gear *3* engages a tooth space *b* of gear *5*. When the tooth leaves the tooth space and surface *c* of gear *3* engages surface *d* of gear *5*, carrier *4* has a dwell. The number of dwells per revolution of carrier *4* is equal to the number of tooth spaces *b* in gear *5*.

2895	TRIPLE PLANETARY GEARING MECHANISM OF AN ELECTRIC HOIST	CxG PR

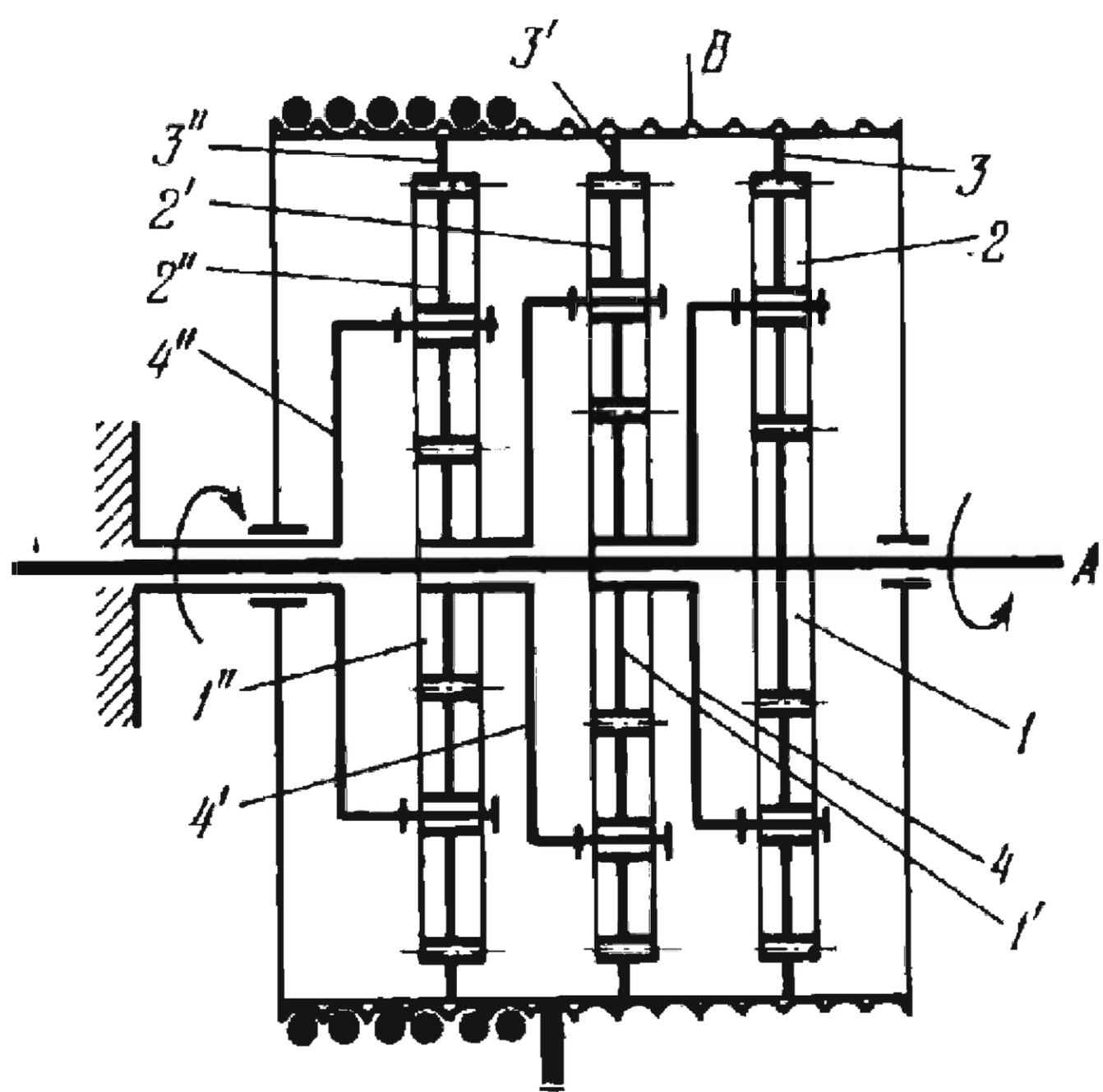

Drum B of the electric hoist is driven by shaft A to which sun gear 1 is keyed. Sun gear $1'$ is rigidly attached to carrier 4 and sun gear $1''$ to carrier $4'$. Sun gears 1, $1'$ and $1''$ mesh with planet gears 2, $2'$ and $2''$ which are connected by turning pairs to carriers 4, $4'$ and $4''$. Gears 2, $2'$ and $2''$ mesh with internal gears 3, $3'$ and $3''$ which are rigidly attached to drum B. Carrier $4''$ is fixed. The speeds n_1 and n_3 of gear 1 (and shaft A) and drum B (in rpm) are related by the equation

$$n_3 = -n_1 \frac{z_1 z_{1'} z_{1''}}{z_{3'}(z_{1''}+z_{3''})(z_1+z_3)+z_{1'}z_{3''}(z_1+z_3)+z_{1'}z_{1''}z_3}$$

where z_1, $z_{1'}$, $z_{1''}$, z_3, $z_{3'}$ and $z_{3''}$ are the numbers of teeth of gears 1, $1'$, $1''$, 3, $3'$ and $3''$. Thus, rotation is transmitted from shaft A to drum B by means of three consecutive planetary mechanisms with a speed reduction. Shaft A and drum B rotate in opposite directions.

2896	PLANETARY REVERSIBLE REDUCING GEAR MECHANISM WITH BRAKE DRUMS	CxG PR

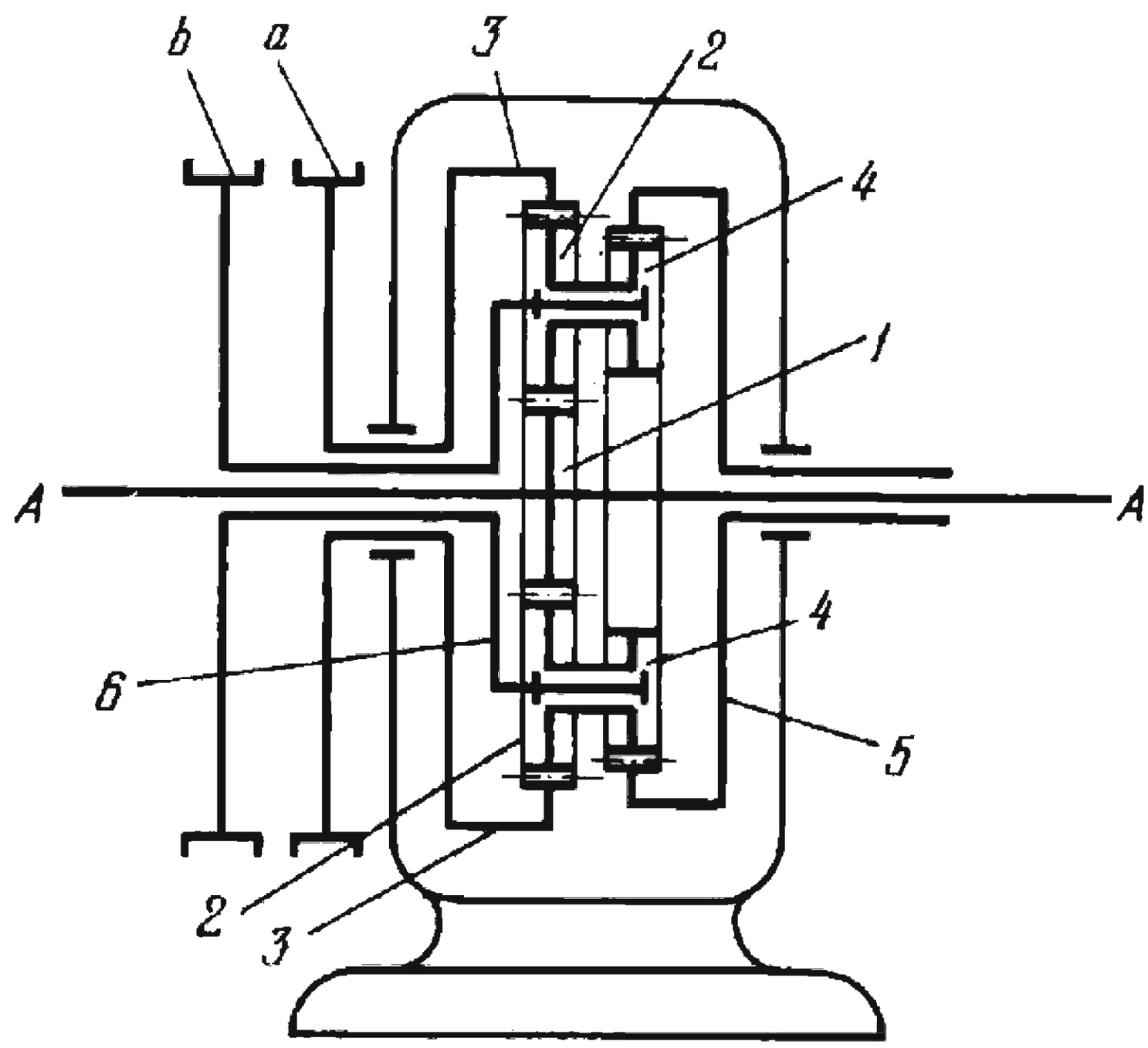

Sun gear *1* is keyed to the input shaft, rotates about fixed axis *A-A* and meshes with planet gears *2*. Gears *2* mesh with internal gear *3* which is rigidly attached to brake drum *a*. Planet gears *4* are rigidly attached to gears *2* and mesh with internal gear *5* which rotates about axis *A-A*. Carrier *6* is connected by turning pairs to planet gears *2* and *4*, and is rigidly attached to brake drum *b* which rotates about axis *A-A*. Forward or reverse rotation of internal gear *5* is obtained by braking either drum *a* or *b*. In forward rotation, when drum *a* is braked, the speeds n_1 and n_5 of gears *1* and *5* (in rpm) are related by the equation

$$n_5 = n_1 \frac{z_4 + z_5}{z_1 + z_3}.$$

In reverse rotation, when drum *b* is braked, the speeds are related by the equation

$$n_5 = -n_1 \frac{z_1 z_4}{z_2 z_5}$$

where z_1, z_2, z_3, z_4 and z_5 are the numbers of teeth of gears *1*, *2*, *3*, *4* and *5*.

2897	TRIPLE PLANETARY BEVEL REDUCING GEAR MECHANISM	CxG PR

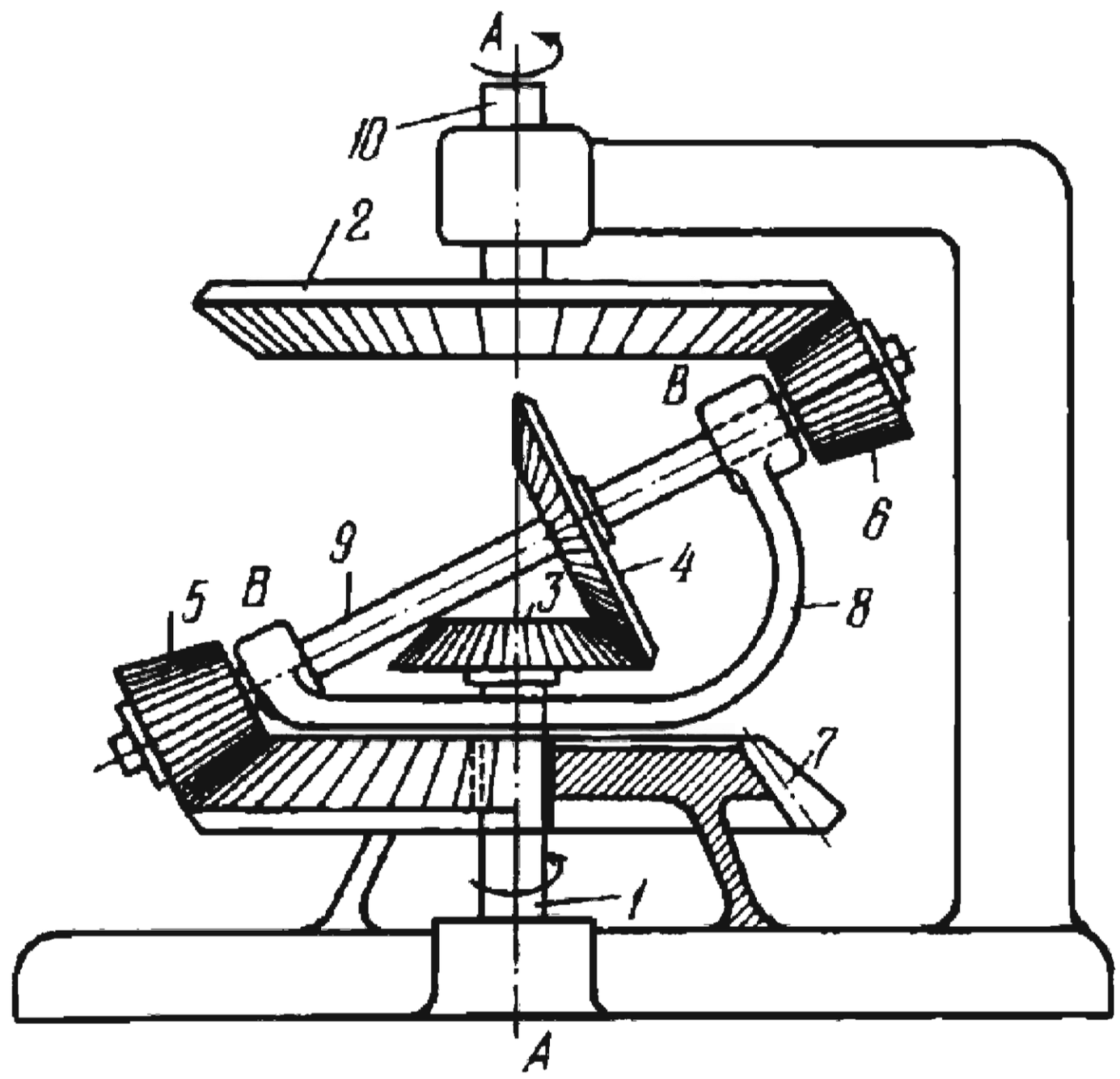

Bevel gear *3* is keyed to shaft *1*, rotates about fixed axis *A-A* and meshes with bevel planet gear *4* which is keyed to shaft *9*. Also keyed to shaft *9* are bevel planet pinions *5* and *6* which mesh with fixed bevel sun gear *7* and rotary bevel sun gear *2*. Shaft *9* rotates in the bearings of carrier *8* which rotates freely about shaft *1*. Gear *2* is keyed to shaft *10* and rotates about axis *A-A*. The speeds n_1 and n_{10} of shafts *1* and *10* (in rpm) are related by the equation

$$n_{10} = n_1 \frac{z_3}{z_2} \frac{z_2 z_5 + z_6 z_7}{z_3 z_5 - z_4 z_7}$$

where z_2, z_3, z_4, z_5, z_6 and z_7 are the numbers of teeth of gears *2*, *3*, *4*, *5*, *6* and *7*.

2898	PLANETARY BEVEL REDUCING GEAR MECHANISM WITH OFF-AXIAL PLANET GEARS	CxG PR

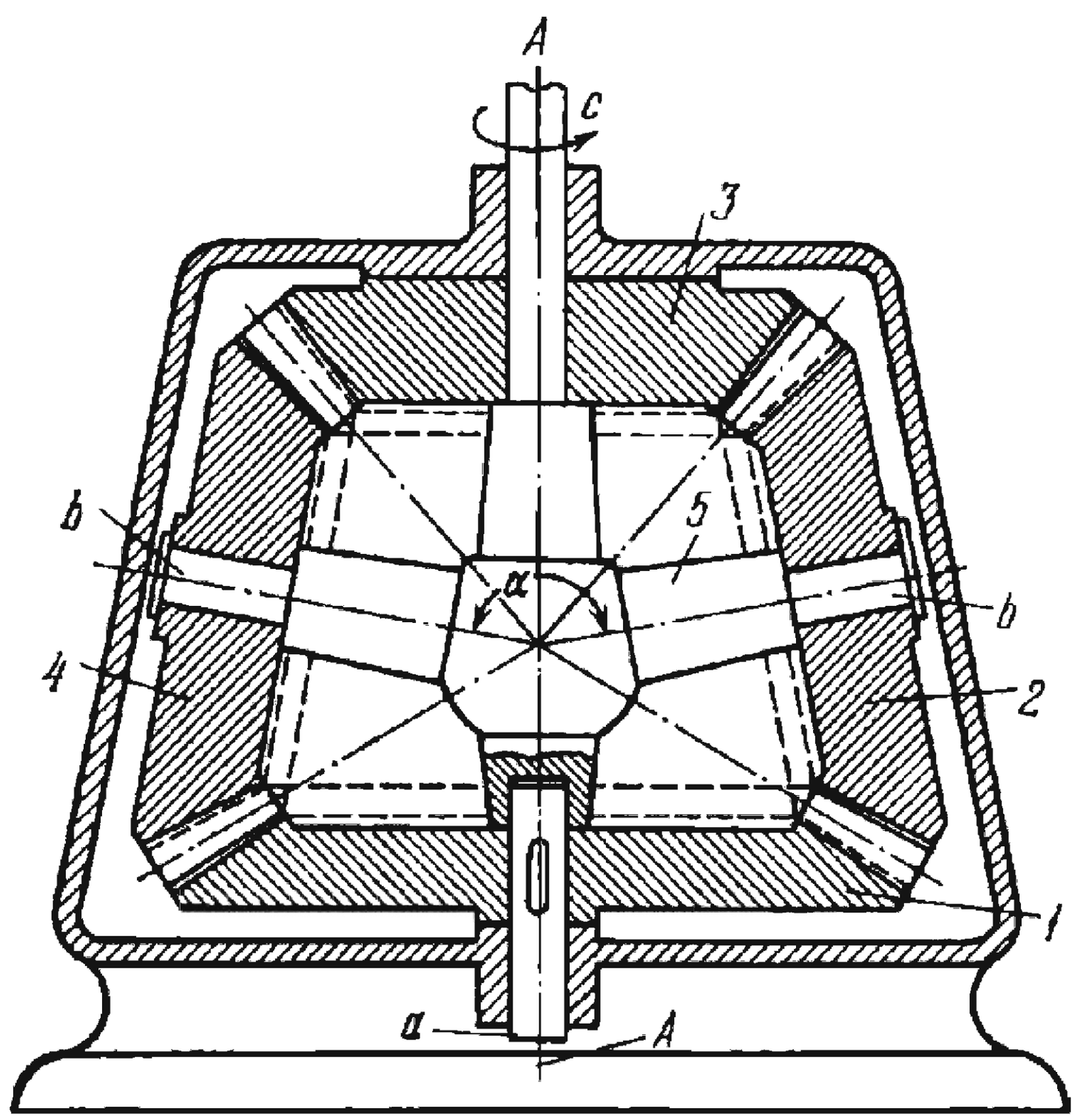

Rotary sun bevel gear *1* is keyed to shaft *a*, rotates about fixed axis *A-A* and meshes with bevel planet gears *2* and *4* which have the angle α between their axes. Gears *2* and *4* mesh with fixed bevel sun gear *3*. Carrier *5* is designed as a cross-shaped member with pins *b* that are connected by turning pairs to planet gears *2* and *4*. Shaft *c* of carrier *5* rotates about axis *A-A*. The speeds n_1 and n_5 of shafts *a* and *c* (in rpm) are related by the equation

$$n_5 = n_1 \frac{z_1}{z_1 - z_3}$$

where z_1 and z_3 are the numbers of teeth of gears *1* and *3*.

2899	HIGH-RATIO PLANETARY REDUCING GEAR MECHANISM	CxG PR

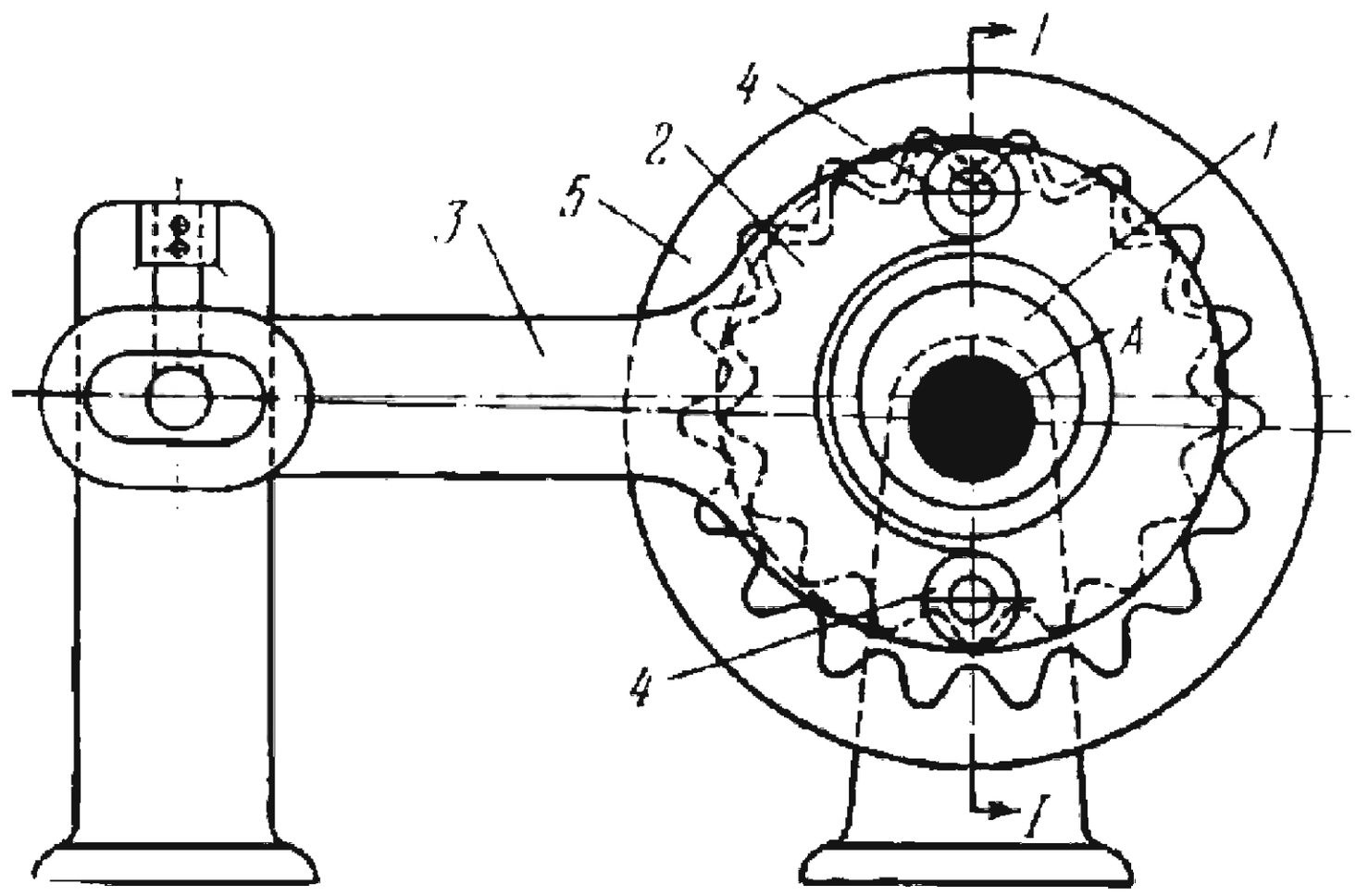

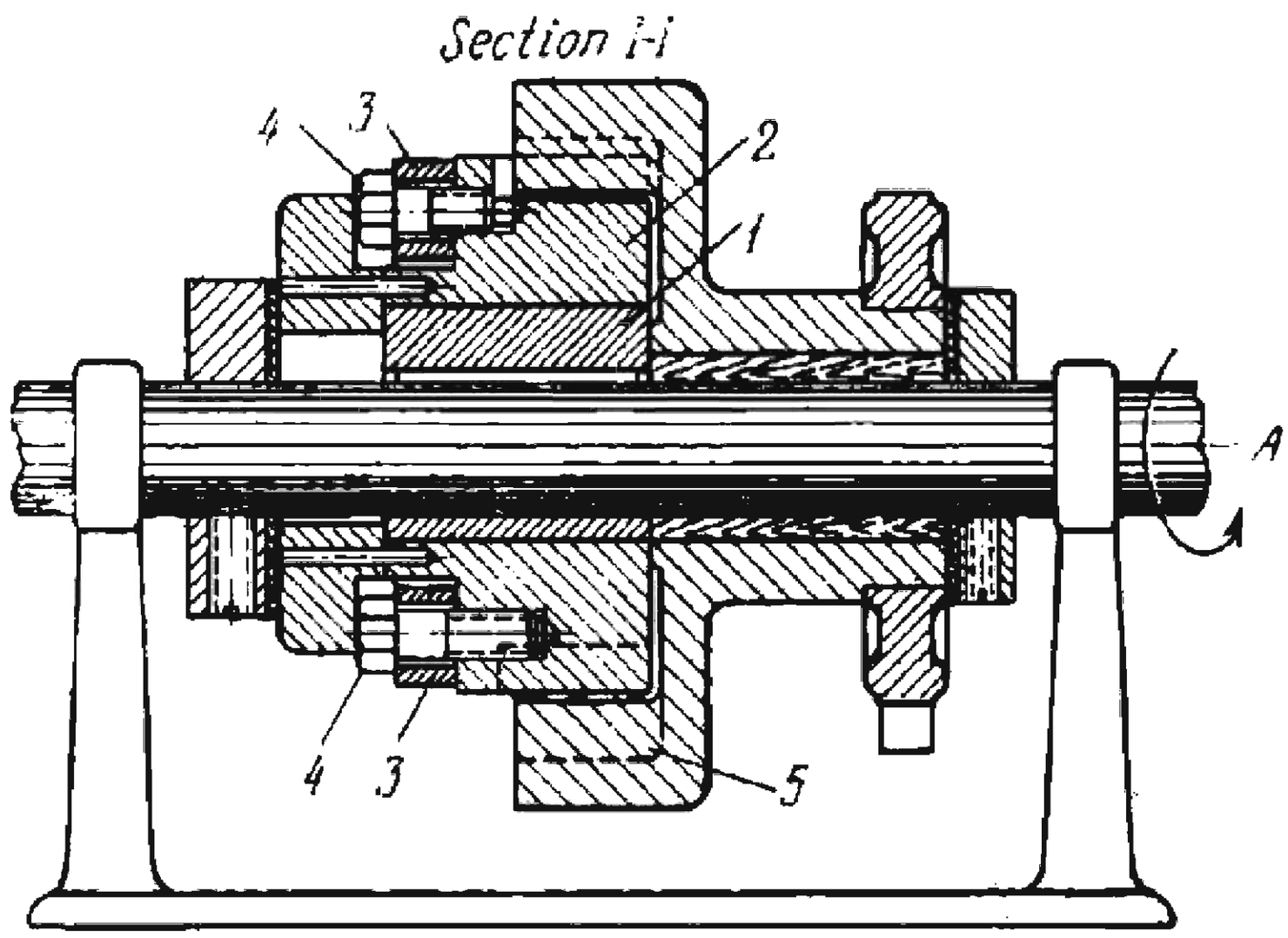

Eccentric *1* rotates about fixed axis *A* and is encircled by the collar of gear *2* which meshes with internal gear *5*. Gear *5* rotates about axis *A*. Gear *2* has yoke *3*, secured to the gear by screws *4*, which prevents rotation of the gear. When eccentric *1* rotates, gear *2* has a circular translational motion and drives gear *5*. The speeds n_1 and n_5 of eccentric *1* and gear *5* (in rpm) are related by the equation

$$n_5 = n_1 \frac{z_5}{z_5 - z_2}$$

where z_2 and z_5 are the numbers of teeth of gears *2* and *5*. The transmission ratio becomes very high when there is only a small difference between the numbers of teeth of gears *2* and *5*.

2900	DIFFERENTIAL REDUCING GEAR MECHANISM WITH TWO PAIRS OF PLANET GEARS	CxG DR

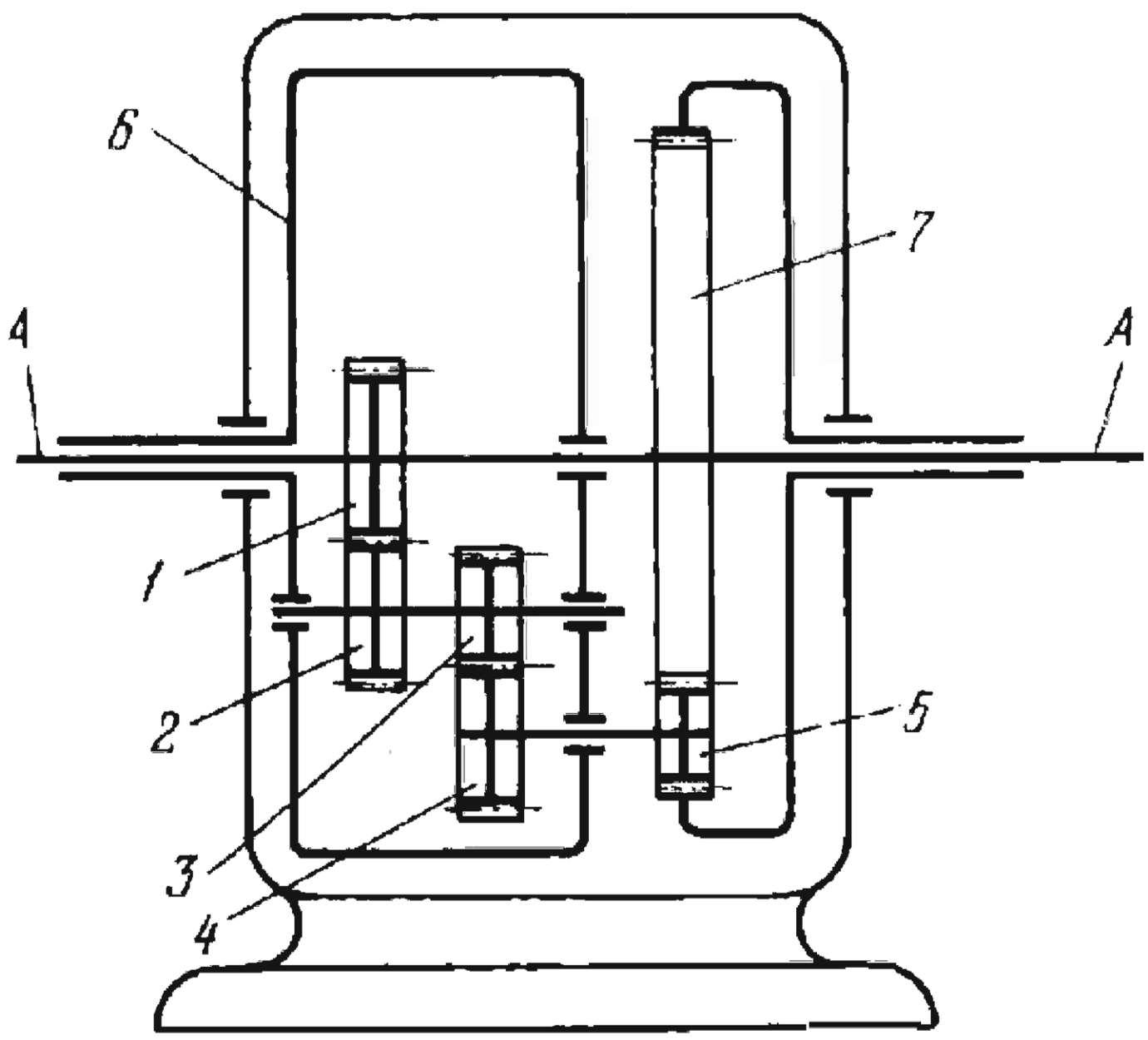

Rotary sun gear *1* rotates about fixed axis *A-A* and meshes with planet gear *2* which is rigidly attached to planet gear *3*. Gear *3* meshes with planet gear *4* which is rigidly attached to planet gear *5*. Planet gears *2* and *3*, and *4* and *5* are connected by turning pairs to carrier *6* which rotates about axis *A-A*. Gear *5* meshes with internal gear *7* which rotates about axis *A-A*. The speeds n_1, n_6 and n_7 of gear *1*, carrier *6* and gear *7* (in rpm) are related by the equation

$$n_6 = \frac{z_2 z_4 z_7 n_1 + z_1 z_3 z_5 n_7}{z_2 z_4 z_7 + z_1 z_3 z_5}$$

where z_1, z_2, z_3, z_4, z_5 and z_7 are the numbers of teeth of gears *1*, *2*, *3*, *4*, *5* and *7*.

2901	DIFFERENTIAL REDUCING GEAR MECHANISM WITH A HOLLOW-JOURNAL CARRIER	CxG DR

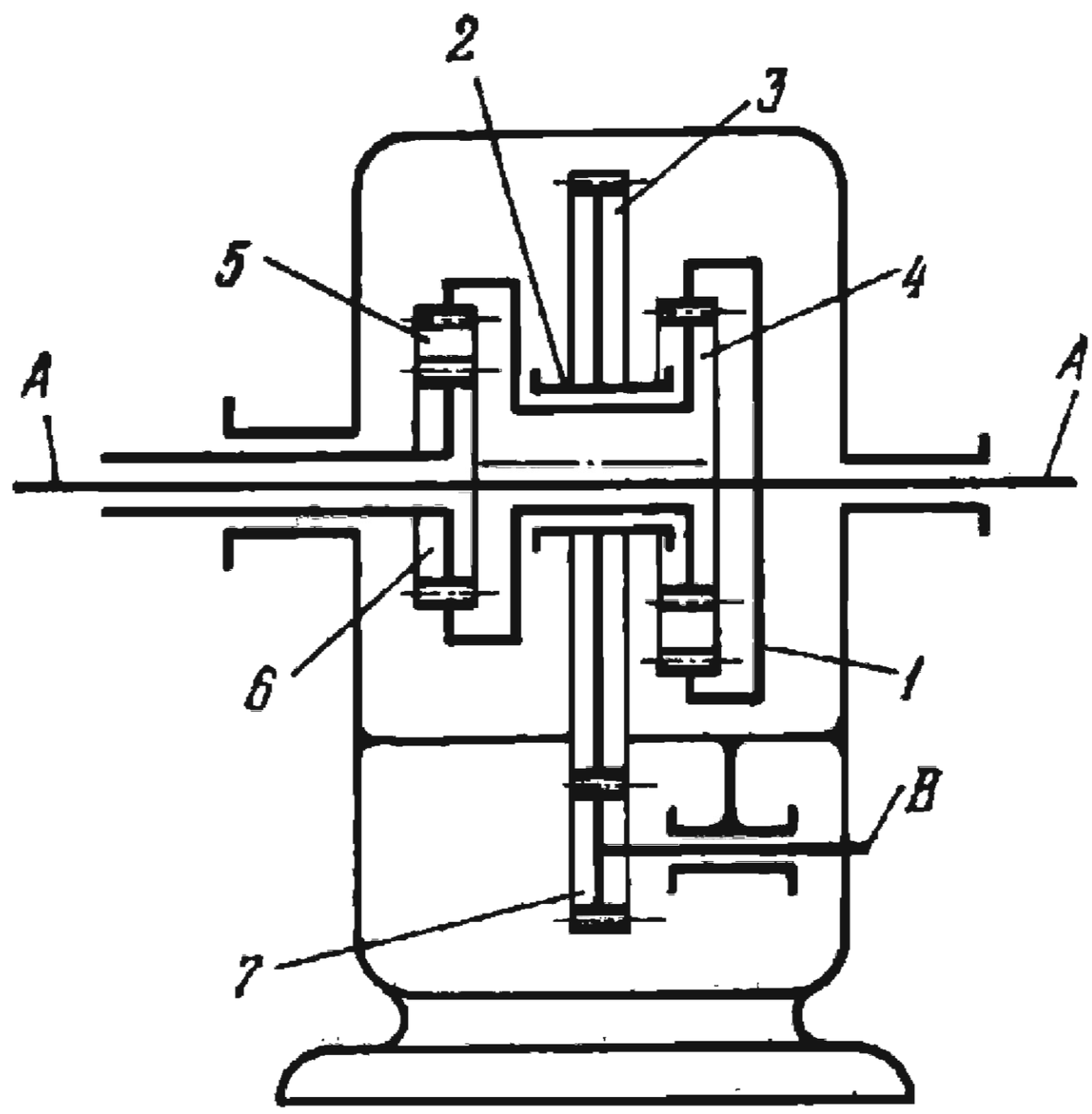

Internal gear *1* rotates about fixed axis *A-A* and meshes with external planet gear *4* which is rigidly attached to internal gear *5*. Planet gear *5* meshes with gear *6* which rotates about axis *A-A*. Carrier *2*, designed as a hollow journal, is rigidly attached to gear *3* which meshes with gear *7*. Gear *7* rotates about fixed axis *B*. The speeds n_1, n_7 and n_6 of gears *1*, *7* and *6* (in rpm) are related by the equation

$$n_7 = \frac{z_3}{z_7} \frac{z_1 z_5 n_1 - z_4 z_6 n_6}{z_4 z_6 - z_1 z_5}$$

where z_1, z_3, z_4, z_5, z_6 and z_7 are the numbers of teeth of gears *1*, *3*, *4*, *5*, *6* and *7*.

2902	DIFFERENTIAL REDUCING GEAR MECHANISM WITH A TRIPLE TOOTHED CLUTCH	CxG DR

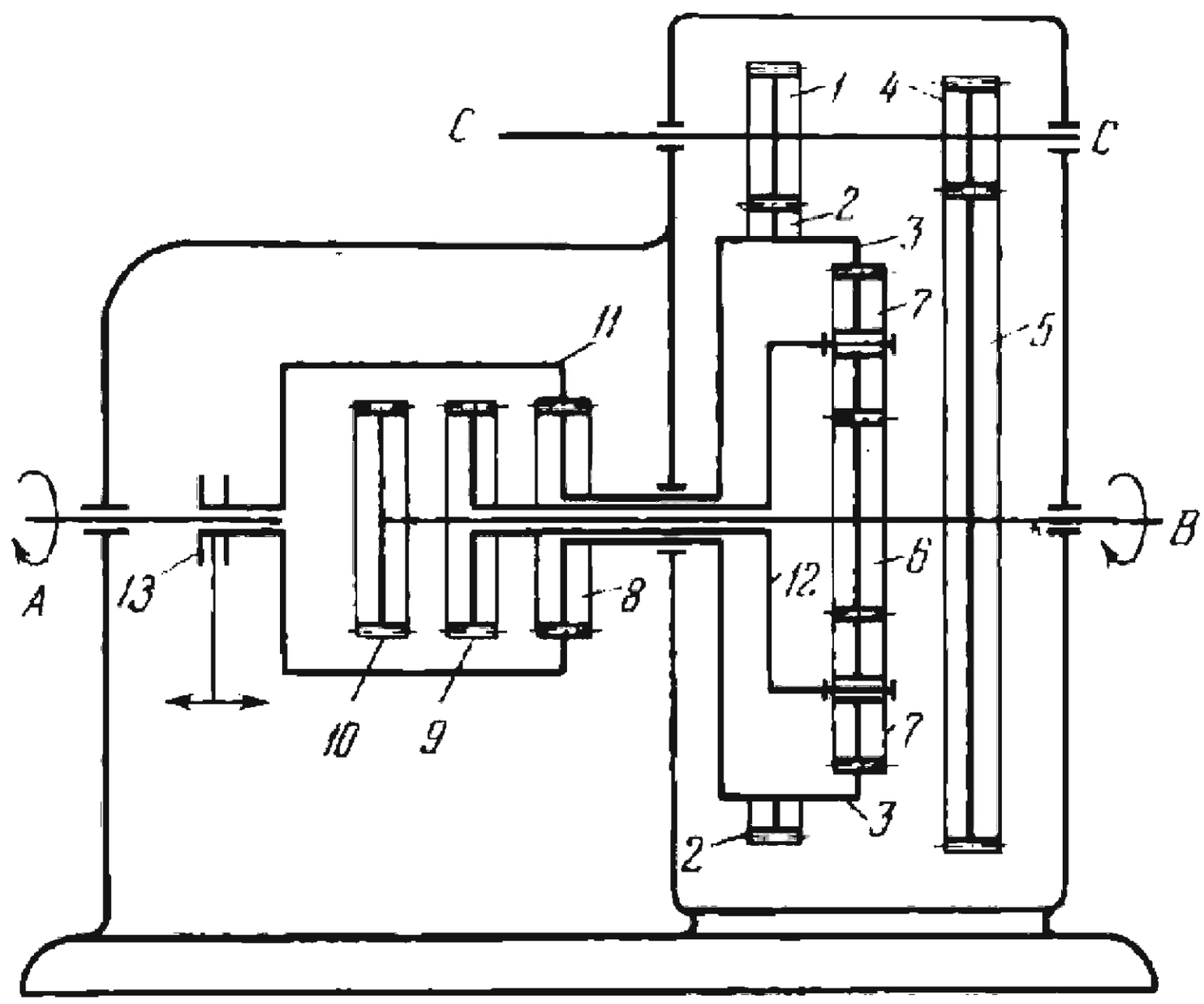

Gears *5*, *6* and *10* are rigidly attached together and rotate about fixed axis *B*. Gear *5* meshes with gear *4* which rotates about fixed axis *C* and is rigidly attached to gear *1*. Gear *1* meshes with gear *2* which rotates about axis *B* and is rigidly attached to internal gear *3* and to gear *8*. Gear *3* meshes with planet gears *7* which are connected by a turning pair to carrier *12*. Carrier *12* rotates about axis *B* and is rigidly attached to gear *9*. Planet gears *7* mesh with gear *6*. Toothed clutch *13* slides along and rotates about axis *A*. Clutch *13* can be shifted into engagement so that its member, internal gear *11*, engages the teeth of either gear *8*, *9* or *10*. When gears *11* and *8* are in engagement, as shown, speeds n_8 and n_5 of gears *8* and *5* (in rpm) are related by the equation

$$n_5 = n_8 \frac{z_2 z_4}{z_1 z_5}.$$

When gears *11* and *9* are in engagement, speeds n_9 and n_5 of gears *9* and *5* are related by the equation

$$n_5 = n_9 \frac{1 + \frac{z_3}{z_6}}{1 + \frac{z_1 z_3 z_5}{z_2 z_5 z_6}}.$$

When gears *11* and *10* are in engagement, the speed n_{10} of gear *10* equals the speed n_5 of gear *5*. Thus

$$n_5 = n_{10}$$

where z_1, z_2, z_3, z_4, z_5 and z_6 are the numbers of teeth of gears *1*, *2*, *3*, *4*, *5* and *6*.

2903	HIGH-RATIO DIFFERENTIAL SPUR REDUCING GEAR MECHANISM	CxG DR

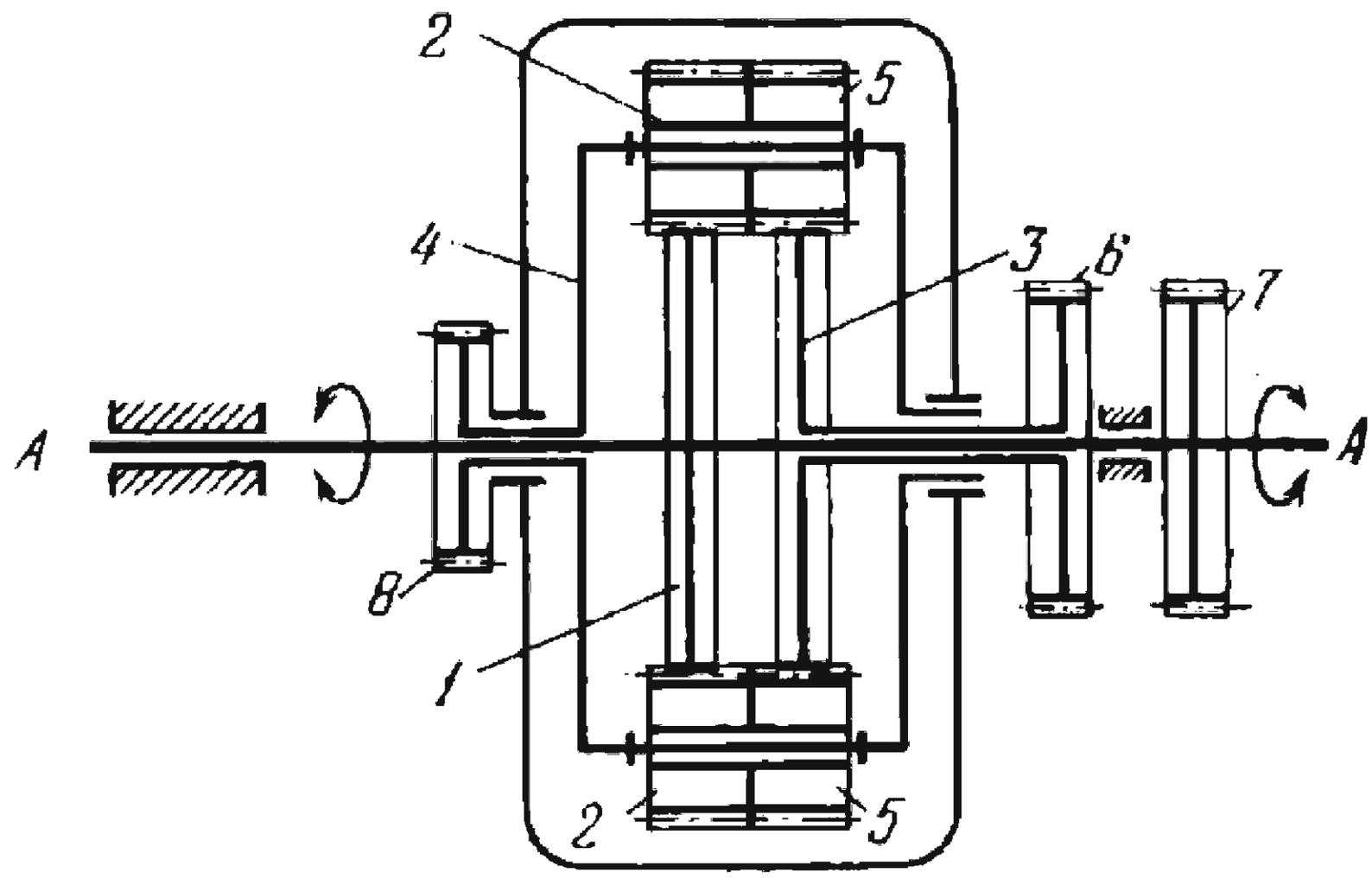

Gear *1* rotates about fixed axis *A-A* and drives gear *7*. Gear *3* rotates about axis *A-A* and drives gear *6*. Carrier *4* rotates about axis *A-A* and drives gear *8*. Gears *1* and *3* mesh with planet gears *2* and *5* which are rigidly attached together and are connected by a turning pair to carrier *4*. The numbers of teeth of gears *1*, *2*, *3* and *5* satisfy the condition

$$z_5 = z_2 + 1 \quad \text{and} \quad z_1 = z_3 + 1.$$

The speeds n_6, n_7 and n_8 of gears *6*, *7* and *8* (in rpm) are related by the equation

$$n_8 = n_6 \frac{z_1 z_5}{z_1 z_5 - z_2 z_3} - n_7 \frac{z_2 z_3}{z_1 z_5 - z_2 z_3}$$

where z_1, z_2, z_3 and z_5 are the numbers of teeth of gears *1*, *2*, *3* and *5*. Thus, with suitably selected numbers of teeth, the mechanism has a high transmission ratio.

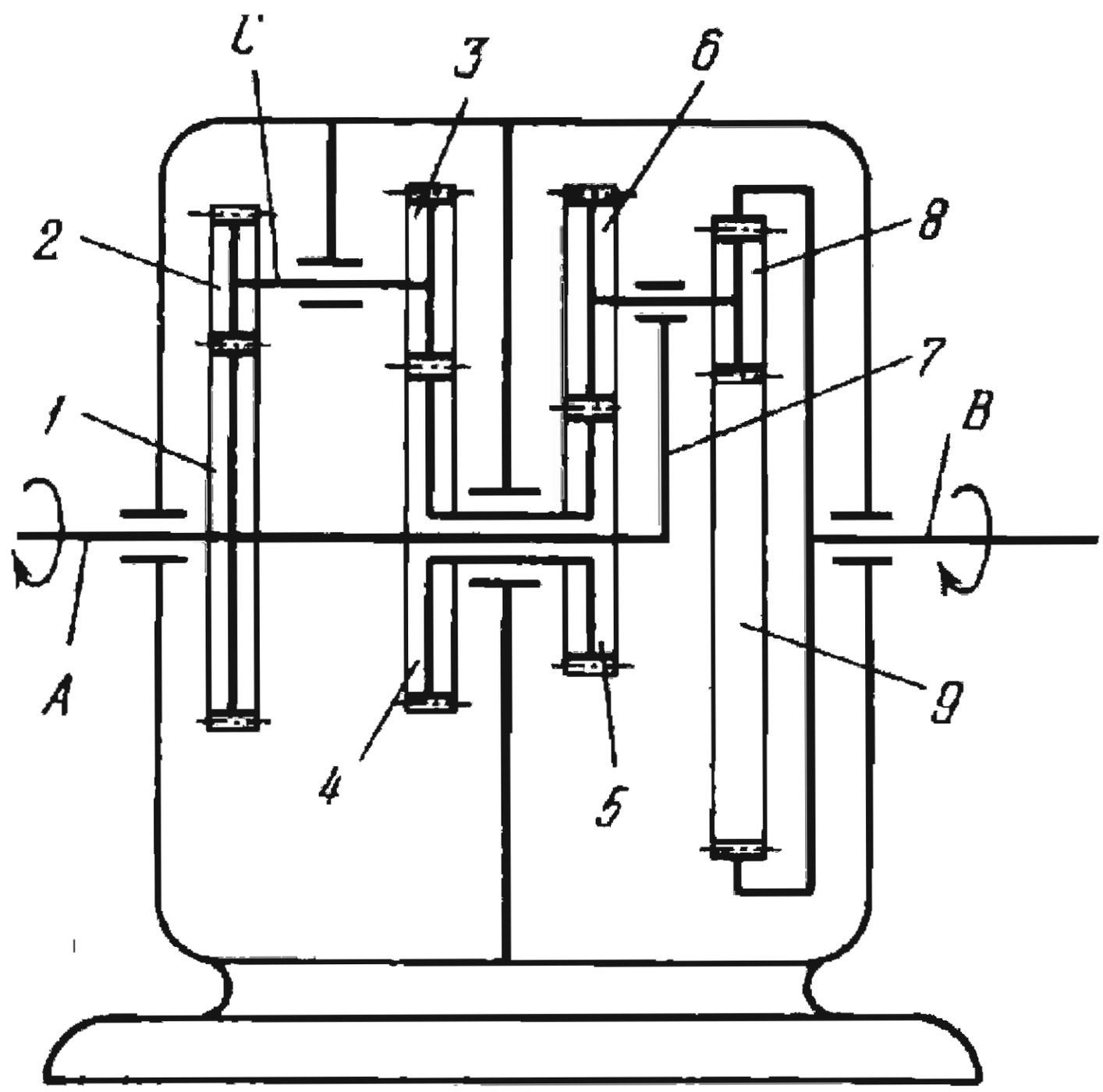

Gear *1* rotates about fixed axis *A* and is rigidly attached to carrier *7*. Gear *1* meshes with gear *2* which rotates about fixed axis *C* and is rigidly attached to gear *3*. Gear *3* meshes with gear *4* which rotates freely about axis *A* and is rigidly attached to gear *5*. Gear *5* meshes with planet gear *6* which is rigidly attached to planet gear *8* and is connected by a turning pair to carrier *7*. Gear *8* meshes with internal gear *9* which rotates about fixed axis *B*. The speeds n_1 and n_9 of gears *1* and *9* (in rpm) are related by the equation

$$n_9 = n_1 \frac{z_5 z_8}{z_6 z_9} \left(1 - \frac{z_1 z_3}{z_2 z_4} + \frac{z_6 z_9}{z_5 z_8}\right)$$

where z_1, z_2, z_3, z_4, z_5, z_6, z_8 and z_9 are the numbers of teeth of gears *1*, *2*, *3*, *4*, *5*, *6*, *8* and *9*.

2905	DIFFERENTIAL GEARING MECHANISM WITH AN ECCENTRIC PARALLEL-CRANK LINKAGE	CxG DR

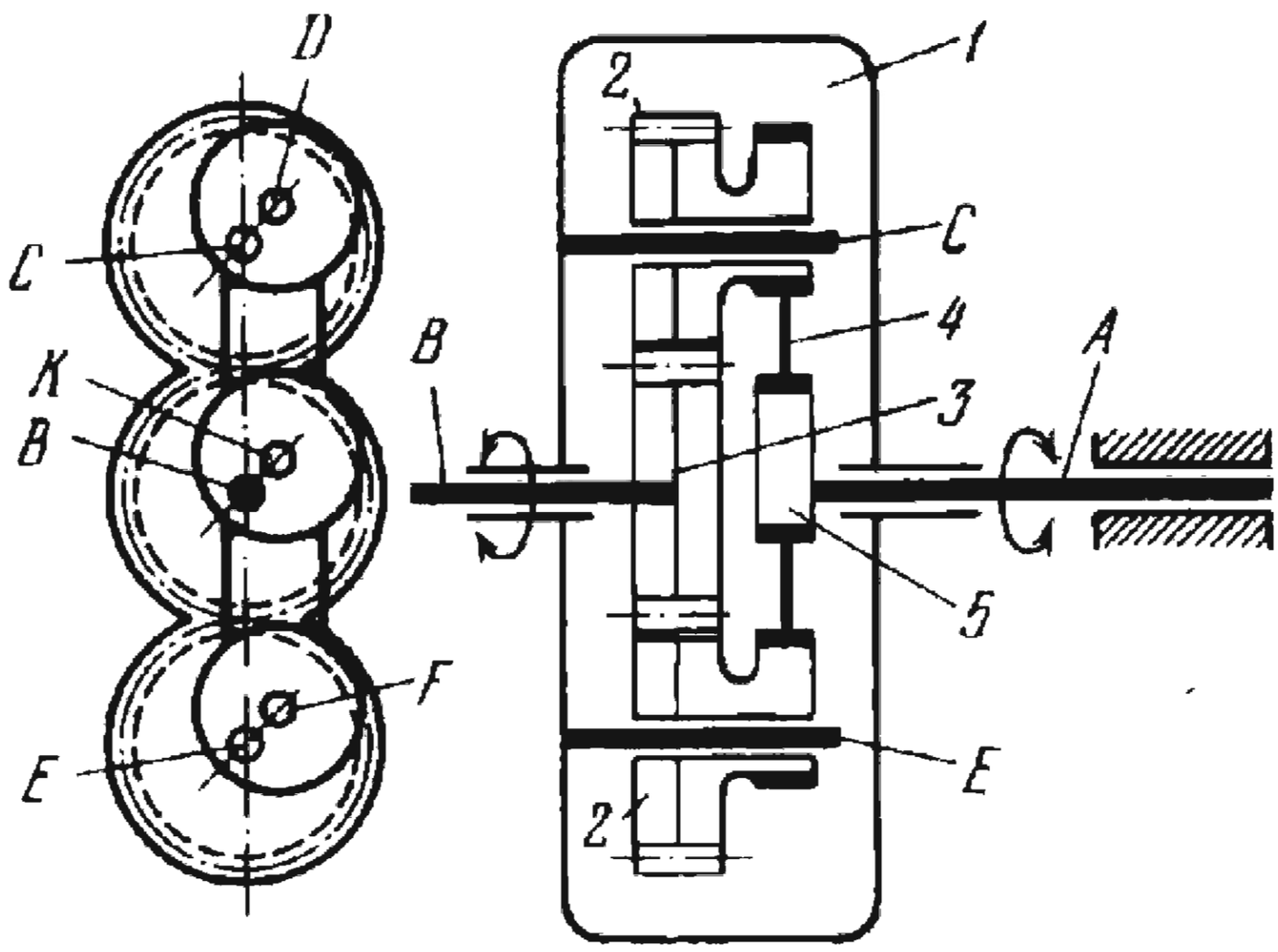

Round eccentric *5* rotates about fixed axis *A*. Two other round eccentrics are rigidly attached to (or integral with) planet gears *2* which mesh with sun gear *3*. Gear *3* rotates about fixed axis *B*. The eccentrics are of equal diameter and are encircled by collars of link *4*. The eccentrics and link *4* form two paired parallel-crank linkages, *CDKB* and *BKFE*. Planet gears *2* are connected by turning pairs to carrier *1* which is designed as a housing that rotates about axes *A* and *B*. The pitch diameters of gears *2* and *3* are equal. The speeds n_1, n_3 and n_5 of carrier *1*, gear *3* and eccentric *5* (in rpm) are related by the equation

$$n_1 = \frac{n_3 + n_5}{2}.$$

2906	SPUR GEARING MECHANISM OF A DIFFERENTIAL WITH ONE INTERNAL GEAR	CxG DR

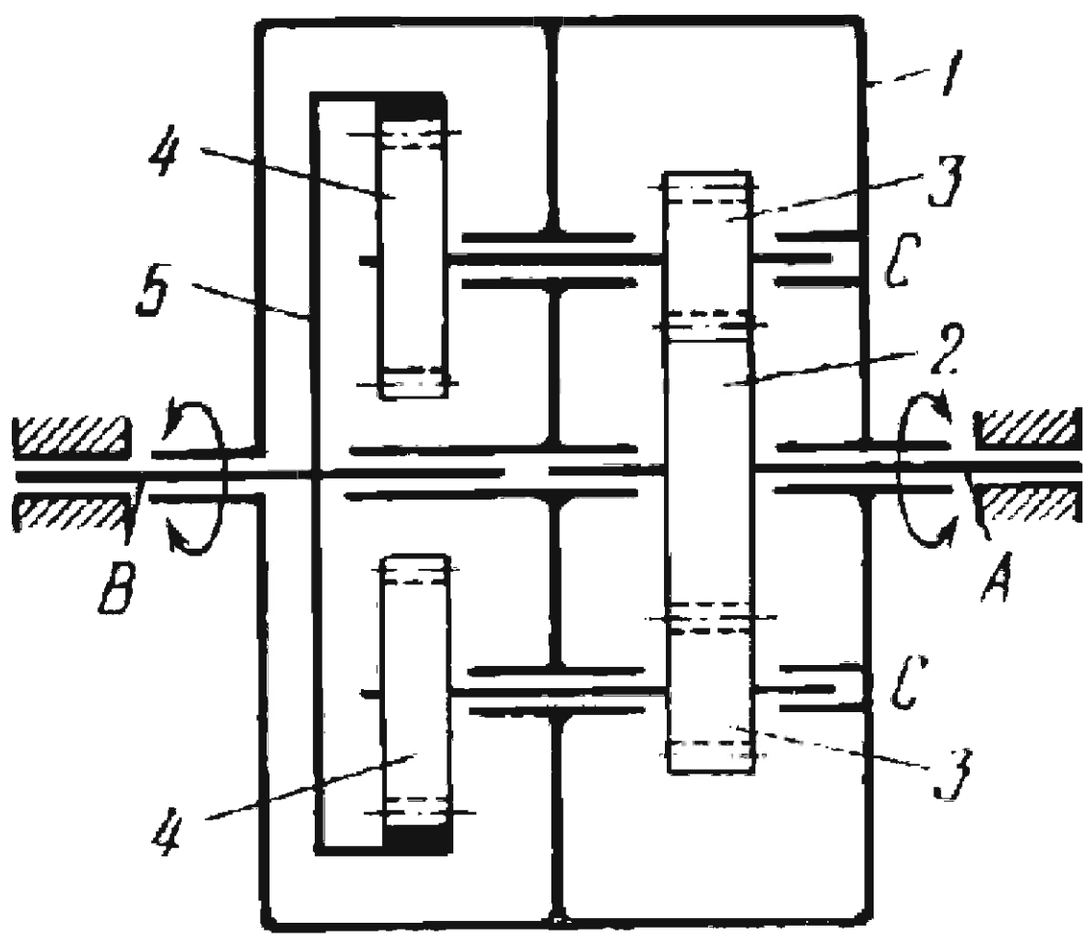

Gears *2* and *5* are keyed to axle shafts *A* and *B*. Gear *2* meshes with planet gears *3* which are connected by turning pairs *C* to carrier *1*, designed as a housing that rotates about axle shafts *A* and *B*. Gears *3* are rigidly attached to planet gears *4* which mesh with internal gear *5*. Axle shafts *A* and *B* are connected to the driving links of the mechanism. When the driving links rotate at the same speed in the same direction, housing *1* rotates at the same speed as sun gears *2* and *5*. If the driving links have different speeds, then, when gears *2* and *5* rotate, planet gears *3* and *4* rotate about axes *C*. The speeds n_2, n_5 and n_1 of gears *2* and *5*, and housing *1* (in rpm) are related by the equation

$$n_1 = n_2 \frac{z_2 z_4}{z_2 z_4 + z_3 z_5} + n_5 \frac{z_3 z_5}{z_2 z_4 + z_3 z_5}$$

where z_2, z_3, z_4 and z_5 are the numbers of teeth of gears *2*, *3*, *4* and *5*.

2907	SPUR GEARING MECHANISM OF A DIFFERENTIAL WITH TWO INTERNAL GEARS	CxG DR

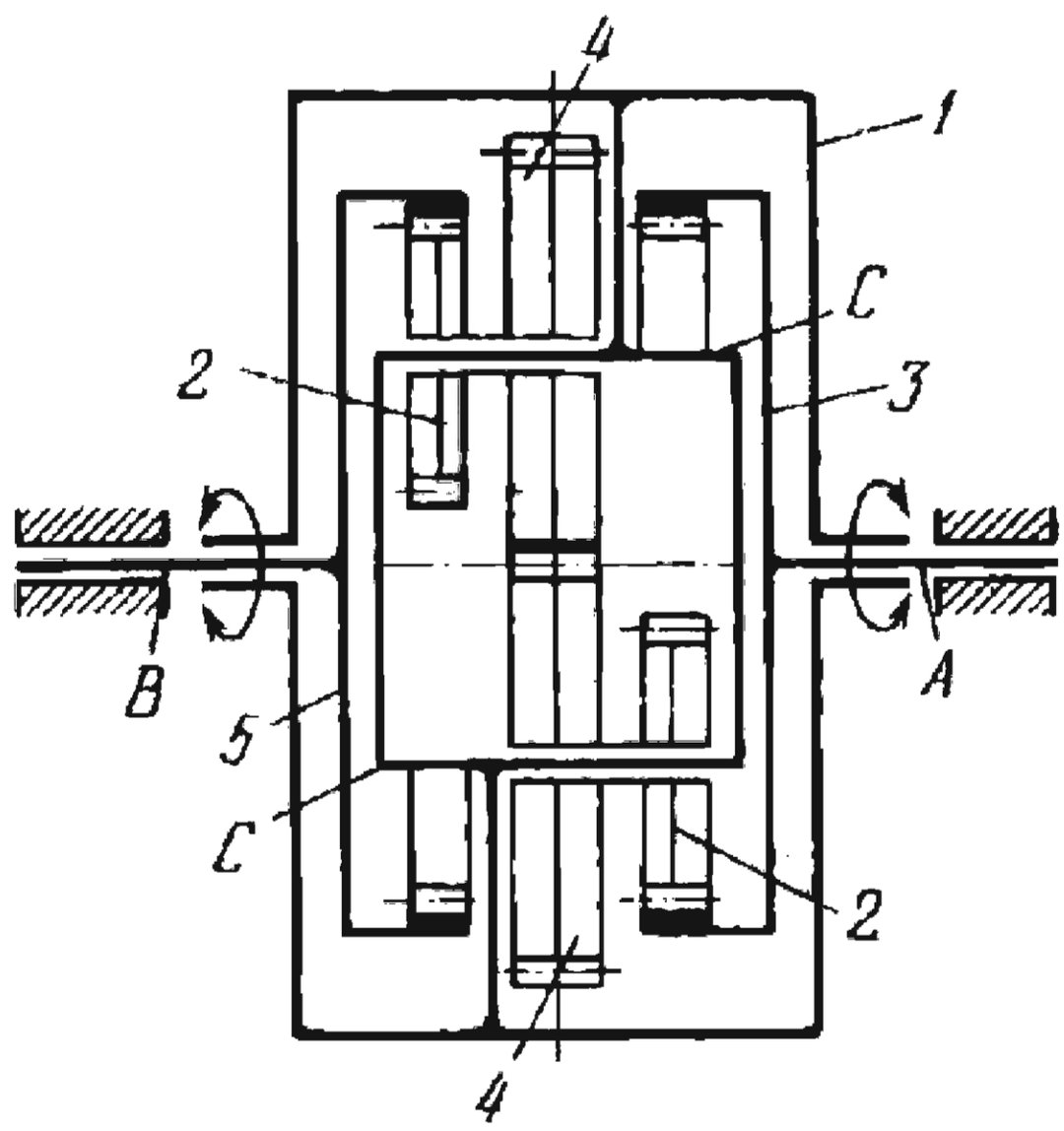

Internal gears *3* and *5* are keyed to axle shafts *A* and *B*, and they mesh with planet gears *2* of equal size which are connected by turning pairs *C* to carrier *1*, designed as a housing that rotates about axle shafts *A* and *B*. Gears *4*, of equal size, are rigidly attached to planet gears *2* and they mesh with each other. Axle shafts *A* and *B* are connected to the driving links of the mechanism. When the driving links rotate at the same speed in the same direction, housing *1* rotates at the same speed as gears *3* and *5*. If the driving links have different speeds, then, when internal sun gears *3* and *5* rotate, planet gears *2* and *4* rotate about axes *C*. The speeds n_3, n_5 and n_1 of gears *3* and *5*, and housing *1* (in rpm) are related by the equation

$$n_1 = \frac{n_3 + n_5}{2}.$$

2908	SPUR GEARING MECHANISM OF A DIFFERENTIAL WITH EXTERNAL GEARS	CxG DR

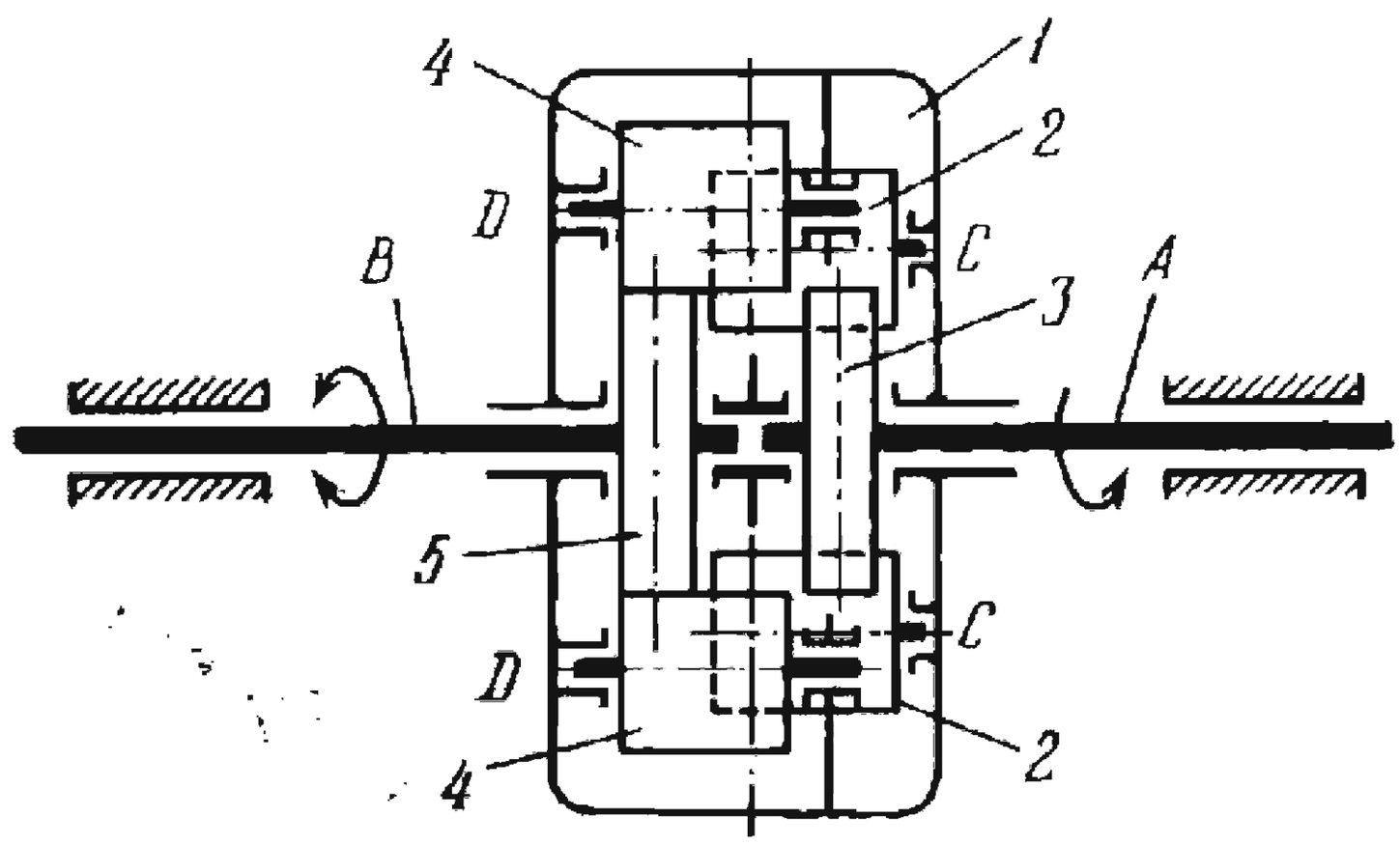

Two gears of equal size, *3* and *5*, are keyed to axle shafts *A* and *B*, and each meshes with two planet gears, *2* or *4*, all of equal size, which are connected by turning pairs *C* and *D* to carrier *1*, designed as a housing that rotates about axle shafts *A* and *B*. The face width of each planet gear *2* is sufficient to enable it to mesh with sun gears *3*, and with its paired planet gear *4* which, in turn, meshes with the other sun gear *5*. Axle shafts *A* and *B* are connected to the driving links of the mechanism. When the driving links rotate at the same speed in the same direction, housing *1* rotates at the same speed as sun gears *3* and *5*. If the driving links have different speeds, then, when sun gears *3* and *5* rotate, planet gears *2* and *4* rotate about axes *C* and *D*. The speeds n_3, n_5 and n_1 of gears *3* and *5*, and housing *1* (in rpm) are related by the equation

$$n_1 = \frac{n_3 + n_5}{2}.$$

2909	DIFFERENTIAL REVERSIBLE REDUCING GEAR MECHANISM WITH BRAKED CARRIER AND DRUM	CxG DR

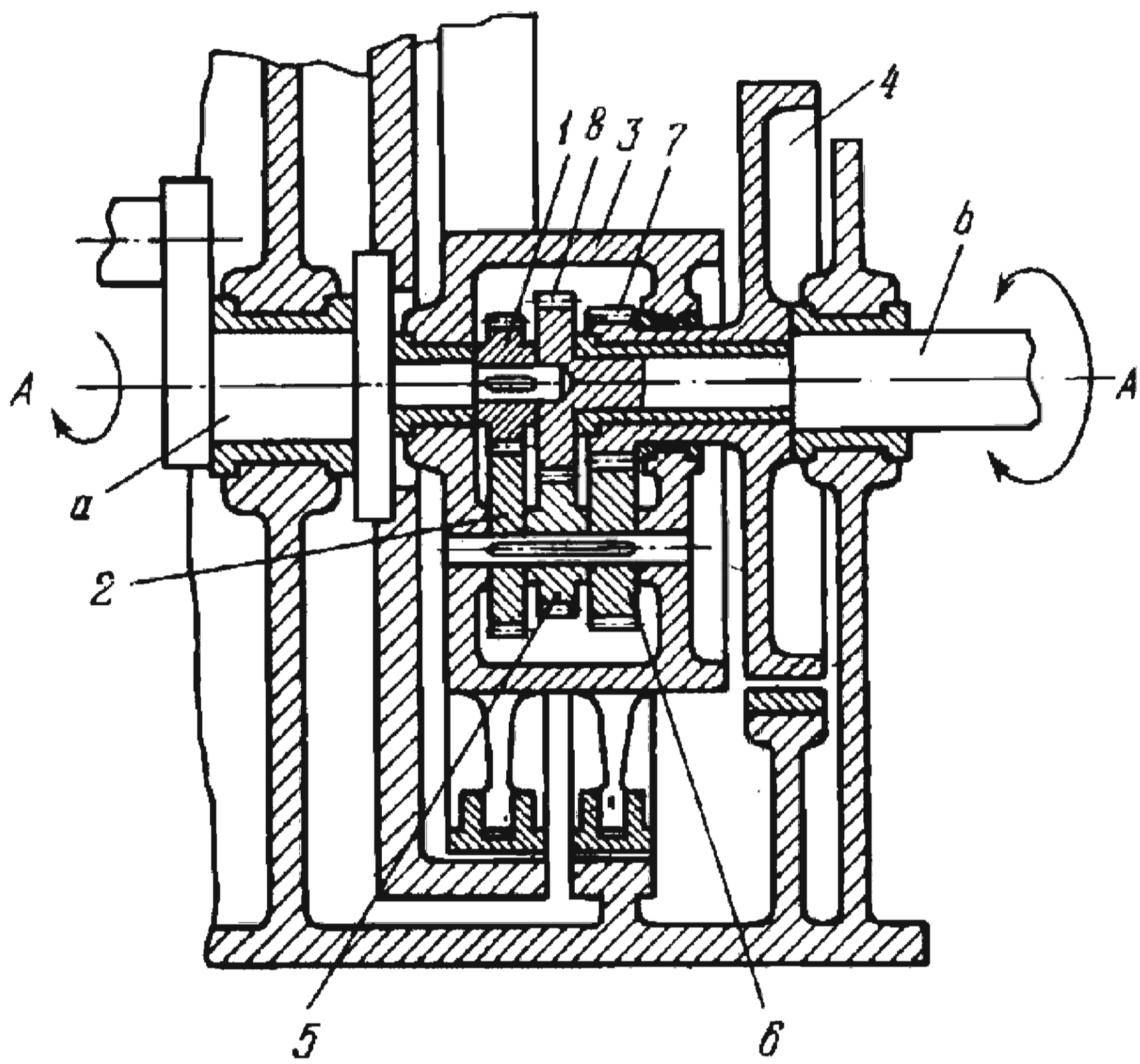

Gear *1* is keyed to shaft *a*, rotates about fixed axis *A-A* and meshes with planet gear *2* which is keyed, together with planet gears *5* and *6*, to a stud. Planet gears *2*, *5* and *6* are connected, through the stud, by a turning pair to carrier *3* which rotates about axis *A-A*. Planet gear *5* meshes with gear *8* which is keyed to shaft *b*. Planet gear *6* meshes with gear *7* of brake drum *4* which rotates freely about shaft *b*. Forward rotation is transmitted from shaft *b* to shaft *a* by braking carrier *3*, and reverse rotation by braking drum *4*. For shafts *a* and *b* to be coaxial, the numbers of teeth of gears *1*, *2*, *5*, *6*, *7* and *8* should satisfy the conditions (if the gears have the same module):

$$z_1 + z_2 = z_5 + z_8 = z_6 + z_7.$$

The speeds n_1 and n_8 of shafts *a* and *b* (in rpm) are related in forward rotation by the equation

$$n_8 = n_1 \frac{z_1 z_5}{z_2 z_8}$$

and in reverse rotation by the equation

$$n_8 = -n_1 \frac{z_1}{z_8} \frac{z_6 z_8 - z_5 z_7}{z_2 z_7 - z_1 z_6}$$

where z_1, z_2, z_5, z_6, z_7 and z_8 are the numbers of teeth of gears *1*, *2*, *5*, *6*, *7* and *8*.

2910	DIFFERENTIAL BEVEL GEARING MECHANISM WITH A CARRIER DRIVE	CxG DR

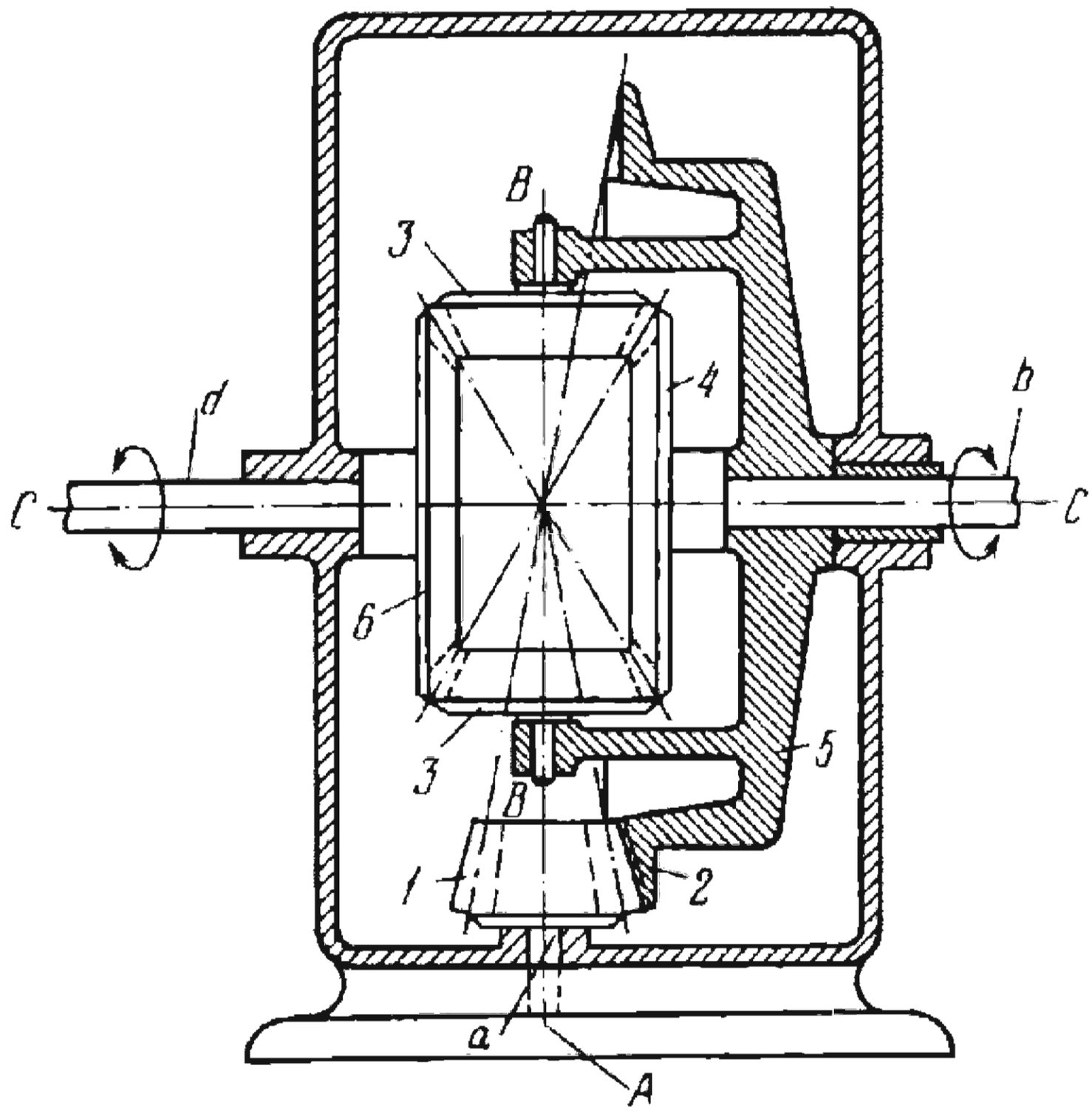

Driving bevel pinion *1* is keyed to shaft *a* and rotates about fixed axis *A*. Pinion *1* meshes with bevel gear *2* which is rigidly attached to (or integral with) carrier *5*. Carrier *5* is connected by turning pairs *B* to bevel planet gears *3* which mesh with bevel sun gears *4* and *6*, keyed to shafts *b* and *d*. Shafts *b* and *d* rotate about fixed axis *C-C*. The speeds n_1, n_4 and n_6 of shafts *a*, *b* and *d* (in rpm) are related by the equation

$$n_4 = 2\frac{z_1}{z_2} n_1 - n_6$$

where z_1 and z_2 are the numbers of teeth of gears *1* and *2*.

2911	DIFFERENTIAL BEVEL GEARING MECHANISM WITH GEARS OF DIFFERENT SIZE	CxG DR

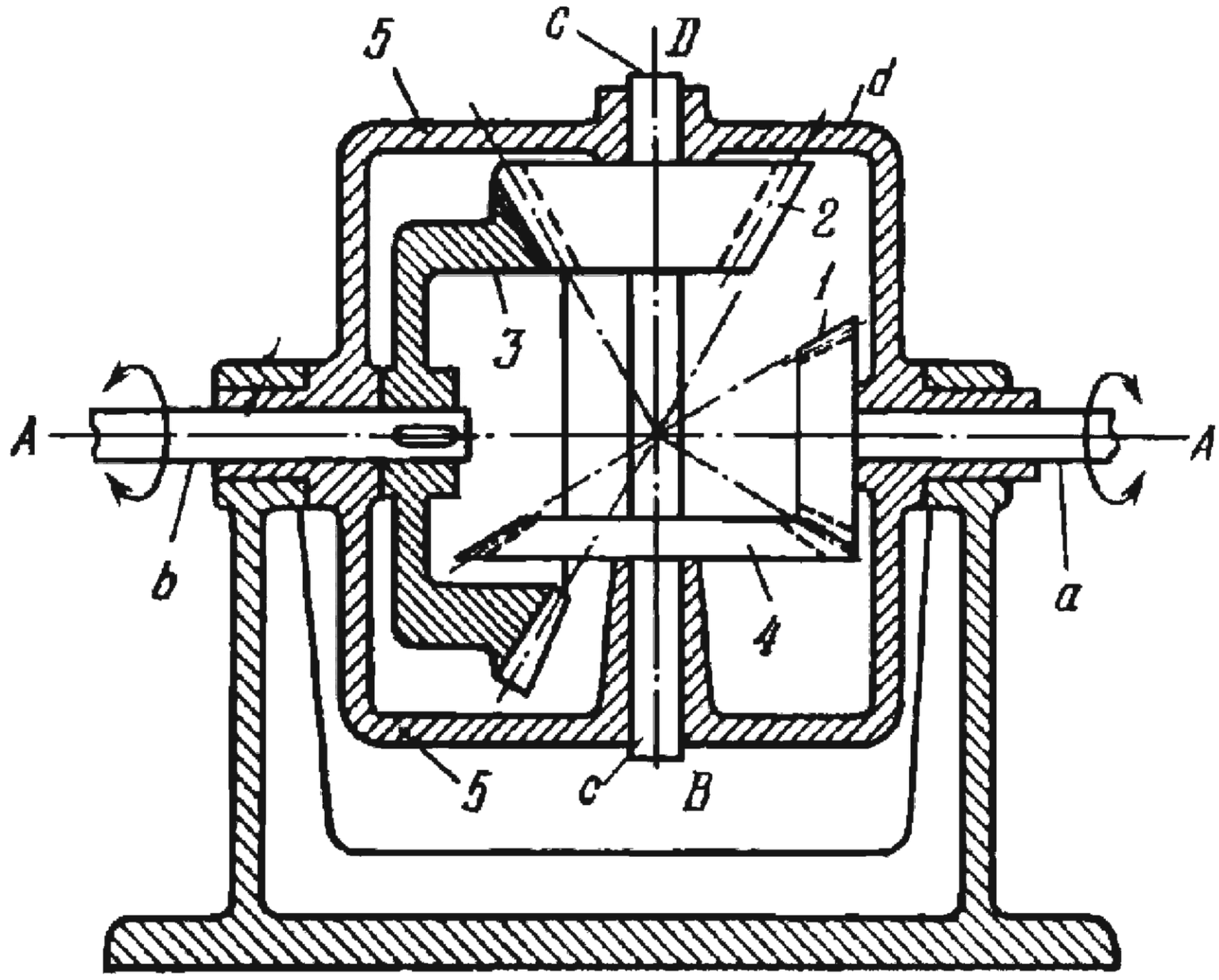

Bevel gear *1* is keyed to shaft *a*, rotates about fixed axis *A-A* and meshes with bevel planet gear *4*. Bevel planet gears *4* and *2* are keyed to shaft *c* which is connected by turning pairs *B* and *D* to carrier *5*. Carrier *5* is designed as housing *d* which rotates about axis *A-A*. Gear *2* meshes with bevel gear *3* which is keyed to shaft *b* and rotates about axis *A-A*. The speeds n_1, n_3 and n_5 of shafts *a* and *b*, and carrier *5* (in rpm) are related by the equation

$$n_5 = \frac{z_3 z_4}{z_3 z_4 - z_1 z_2} n_3 - \frac{z_1 z_2}{z_3 z_4 - z_1 z_2} n_1$$

where z_1, z_2, z_3 and z_4 are the numbers of teeth of gears *1*, *2*, *3* and *4*.

2912	DIFFERENTIAL BEVEL REDUCING GEAR MECHANISM	CxG DR

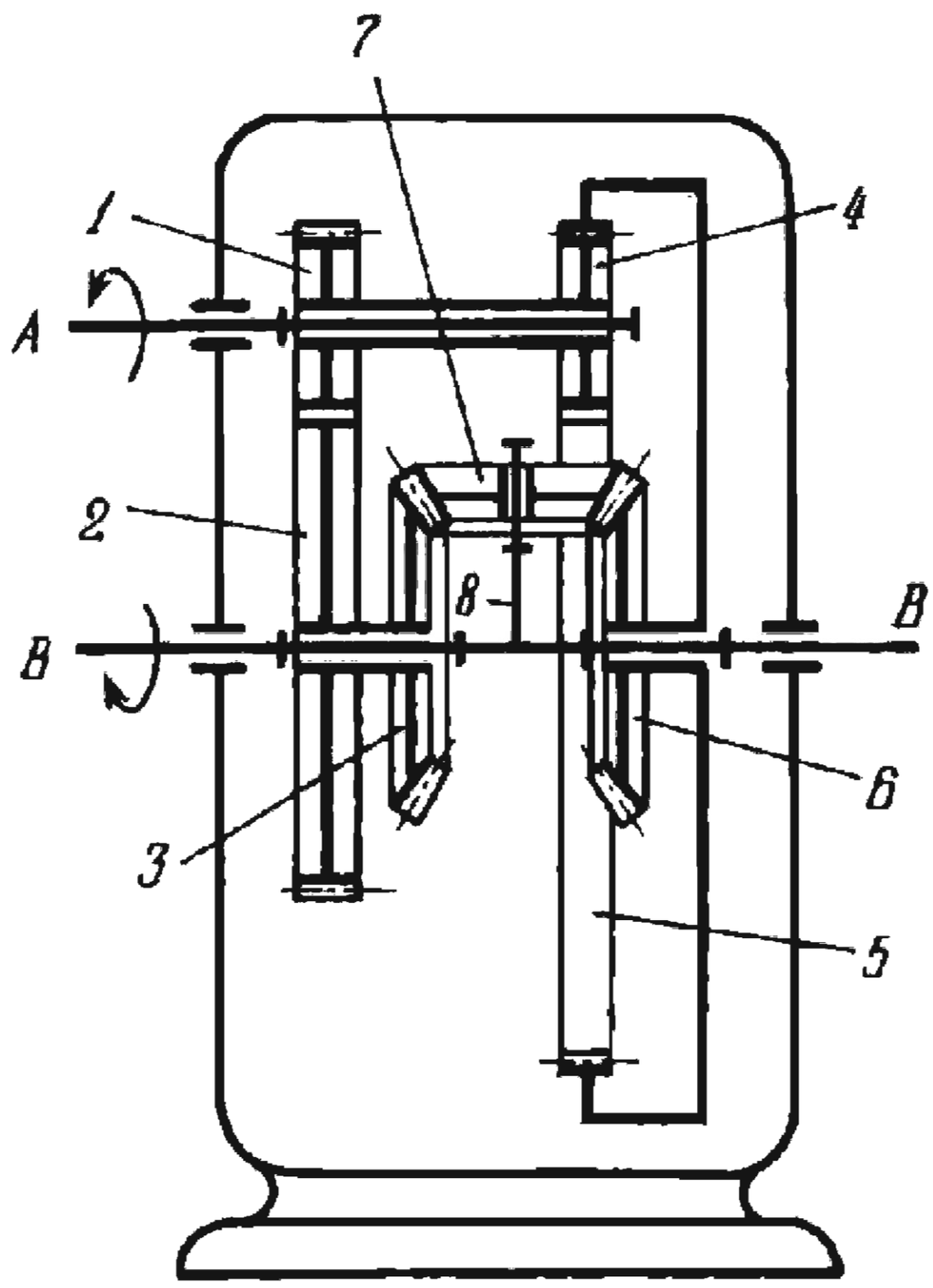

Gears *1* and *4* are rigidly attached together and rotate about fixed axis *A*. Gear *1* meshes with gear *2* which rotates about fixed axis *B-B*. Gear *4* meshes with internal gear *5* which rotates about axis *B-B*. Gears *2* and *5* are rigidly attached to bevel gears *3* and *6* which mesh with bevel planet gear *7*. Gear *7* is connected by a turning pair to carrier *8* which rotates about axis *B-B*. The speeds n_1 and n_8 of gear *1* and carrier *8* are related by the equation

$$n_8 = -n_1 \frac{z_1 z_4 - z_2 z_5}{2 z_1 z_5}$$

where z_1, z_2, z_4 and z_5 are the numbers of teeth of gears *1*, *2*, *4* and *5*. Gear *1* and carrier *8* rotate in opposite directions.

2913	WORM AND BEVEL GEARING MECHANISM OF A DIFFERENTIAL	CxG DR

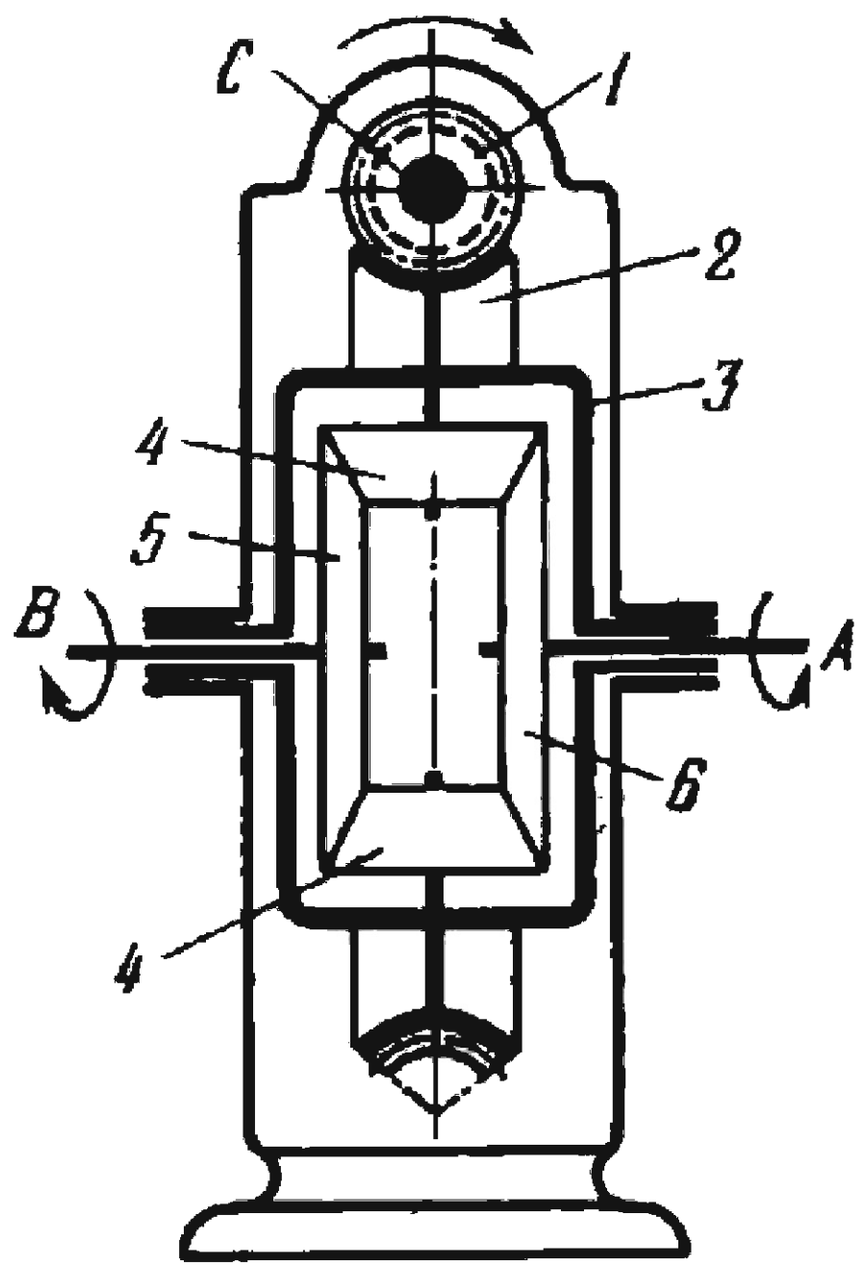

Worm *1* rotates about fixed axis *C* and meshes with worm wheel *2* which is rigidly attached to the carrier, designed as housing *3*. Bevel planet gears *4*, of the same size, rotate freely on studs of housing *3* and mesh with bevel sun gears *5* and *6* which are keyed to axle shafts *B* and *A*. These axle shafts are connected to driving links (not shown) of the mechanism. When the driving links rotate in the same direction at the same speed, sun gears *5* and *6* rotate at the same speed as housing *3*. If the driving links have different speeds, then, when sun gears *5* and *6* rotate, planet gears *4* rotate about their axes. The speeds n_1, n_4 and n_6 of worm *1*, and gears *4* and *6* (in rpm) are related by the equation

$$n_1 = \frac{z_2}{z_1} \frac{n_4 + n_6}{2}$$

where z_1 is the number of threads (starts) of worm *1* and z_2 is the number of teeth of worm wheel *2*.

2914	DIFFERENTIAL BEVEL REDUCING GEAR MECHANISM WITH TWO DRIVING LINKS	CxG DR

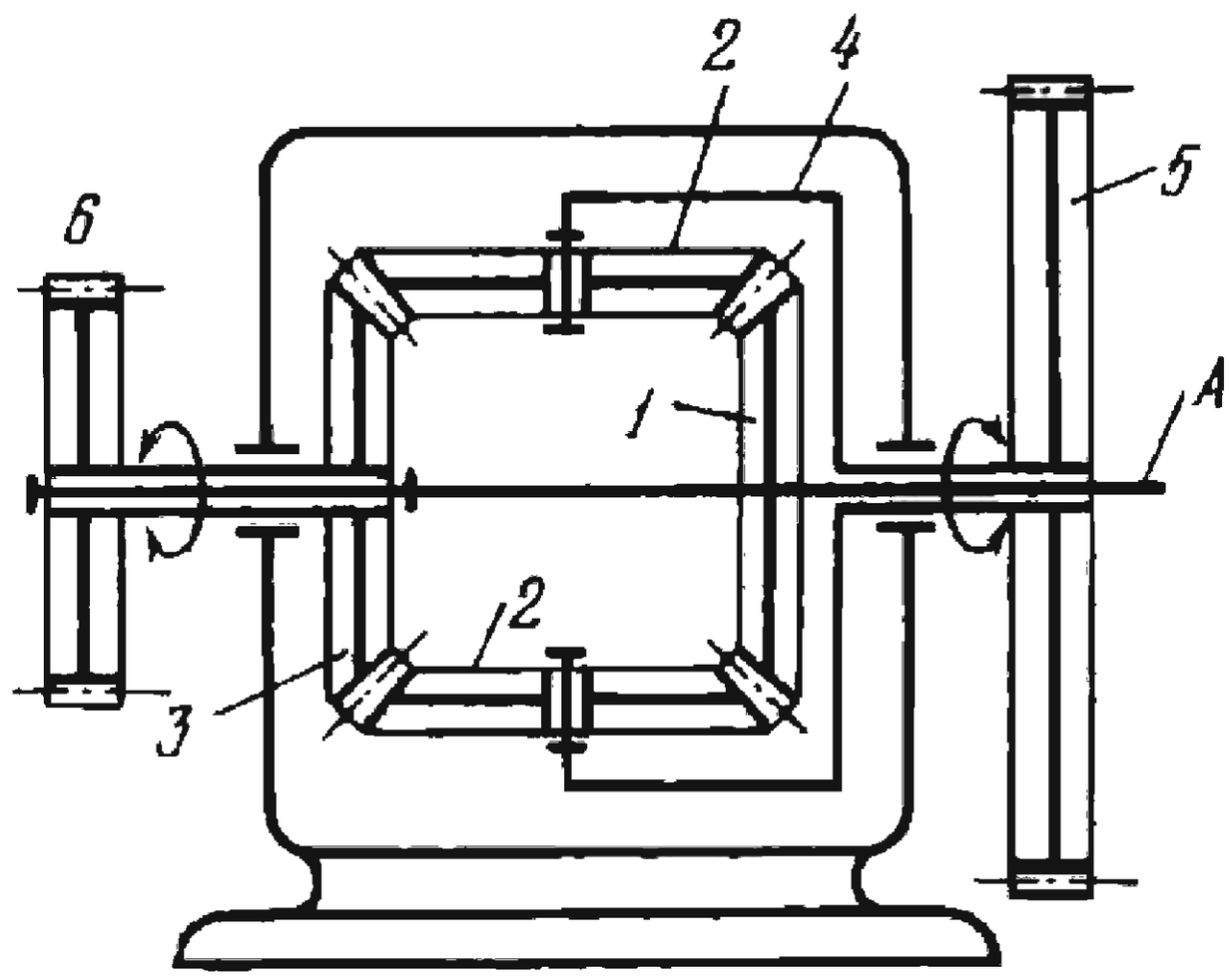

Rotation is transmitted to driven bevel gear *1*, keyed to shaft *A*, from gear *5* which is rigidly attached to carrier *4*, and gear *6* which is rigidly attached to bevel gear *3*. Bevel sun gears *1* and *3*, of equal diameter, mesh with bevel planet gears *2* which are connected by turning pairs to carrier *4*. The speeds n_1, n_5 and n_6 of gears *1*, *5* and *6* (in rpm) are related by the equation

$$n_1 = 2n_5 - n_6.$$

When the condition

$$n_5 = \frac{n_6}{2}$$

is satisfied, gear *1* is stationary.

2915	BEVEL GEARING MECHANISM OF A DIFFERENTIAL	CxG DR

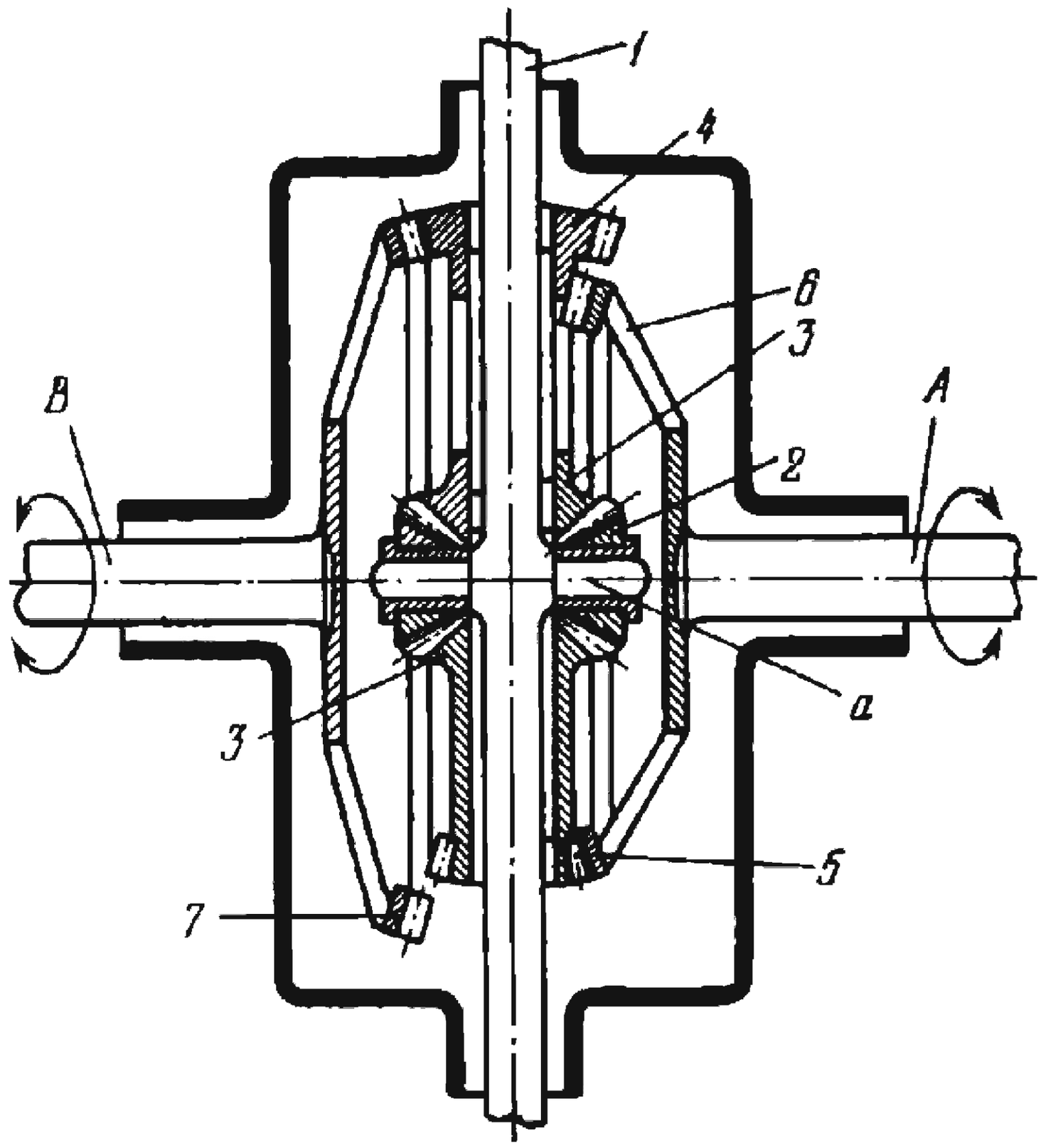

Rotation is transmitted from shaft *1* of the carrier through studs *a* to bevel planet gears *2*. Gears *2* mesh with bevel gears *3* which are rigidly attached (or integral with) bevel gears *4* and *5*. Gears *4* and *5* mesh with bevel sun gears *7* and *6* which are keyed to shafts *B* and *A*. The ratio of the numbers of teeth of gears *4* and *7* is equal to that of gears *5* and *6*. Consequently, when shafts *A* and *B* rotate in the same direction at the same speed, sun gears *6* and *7* rotate at the same speed and carrier shaft *1* is stationary. If the driving links, connected to shafts *A* and *B*, have different speeds, then the planet gears rotate on studs *a* and shaft *1* rotates. Shafts *A* and *B* do not have to be coaxial. The speeds n_1, n_6 and n_7 of carrier shaft *1*, and gears *6* and *7* (in rpm) are related by the equation

$$n_1 = \frac{n_6 + n_7}{2}.$$

2916.	BEVEL AND SPUR GEARING MECHANISM OF A DIFFERENTIAL	CxG DR

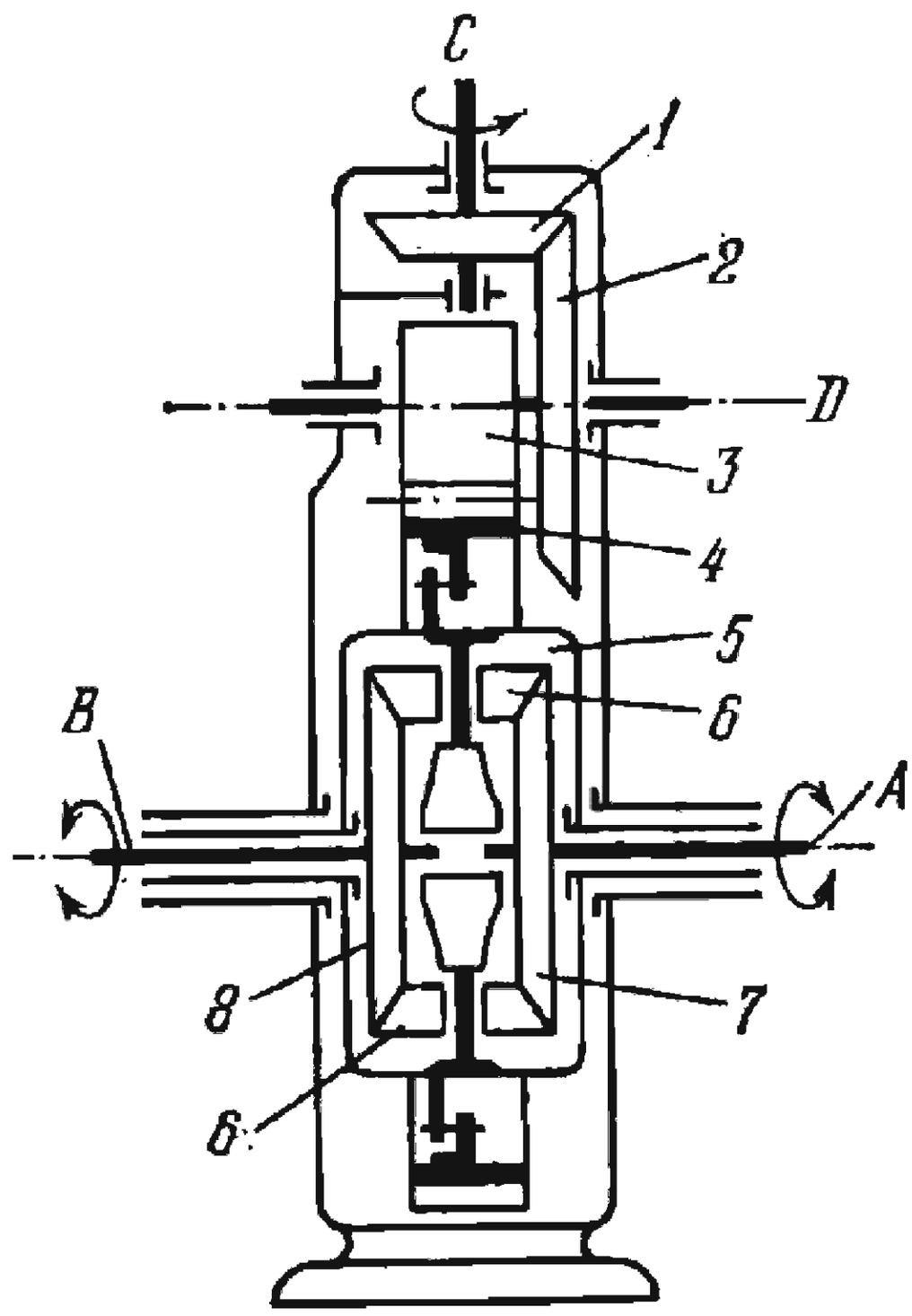

Bevel gear *1* rotates about fixed axis *C* and meshes with bevel gear *2* which rotates about fixed axis *D*. Gear *2* is rigidly attached to spur gear *3* which meshes with gear *4*, rigidly attached to the carrier designed as housing *5*. Mounted freely on studs of housing *5* are bevel planet gears *6* which mesh with bevel sun gears *8* and *7* of equal diameter. Gears *7* and *8* are keyed to shafts *A* and *B* which are connected to driving links of the mechanism. When the driving links rotate in the same direction at the same speed, sun gears *7* and *8* rotate at the same speed as housing *5*. If the driving links have different speeds, then, when gears *7* and *8* rotate, planet gears *6* rotate about their axes. The speeds n_1, n_7 and n_8 of gears *1*, *7* and *8* are related by the equation

$$n_1 = \frac{z_2 z_4}{z_1 z_3} \frac{n_7 + n_8}{2}$$

where z_1, z_2, z_3 and z_4 are the numbers of teeth of gears *1*, *2*, *3* and *4*.

2917	BEVEL-GEARING MECHANISM OF A DIFFERENTIAL WITH AN INTERLOCKING CLUTCH	CxG DR

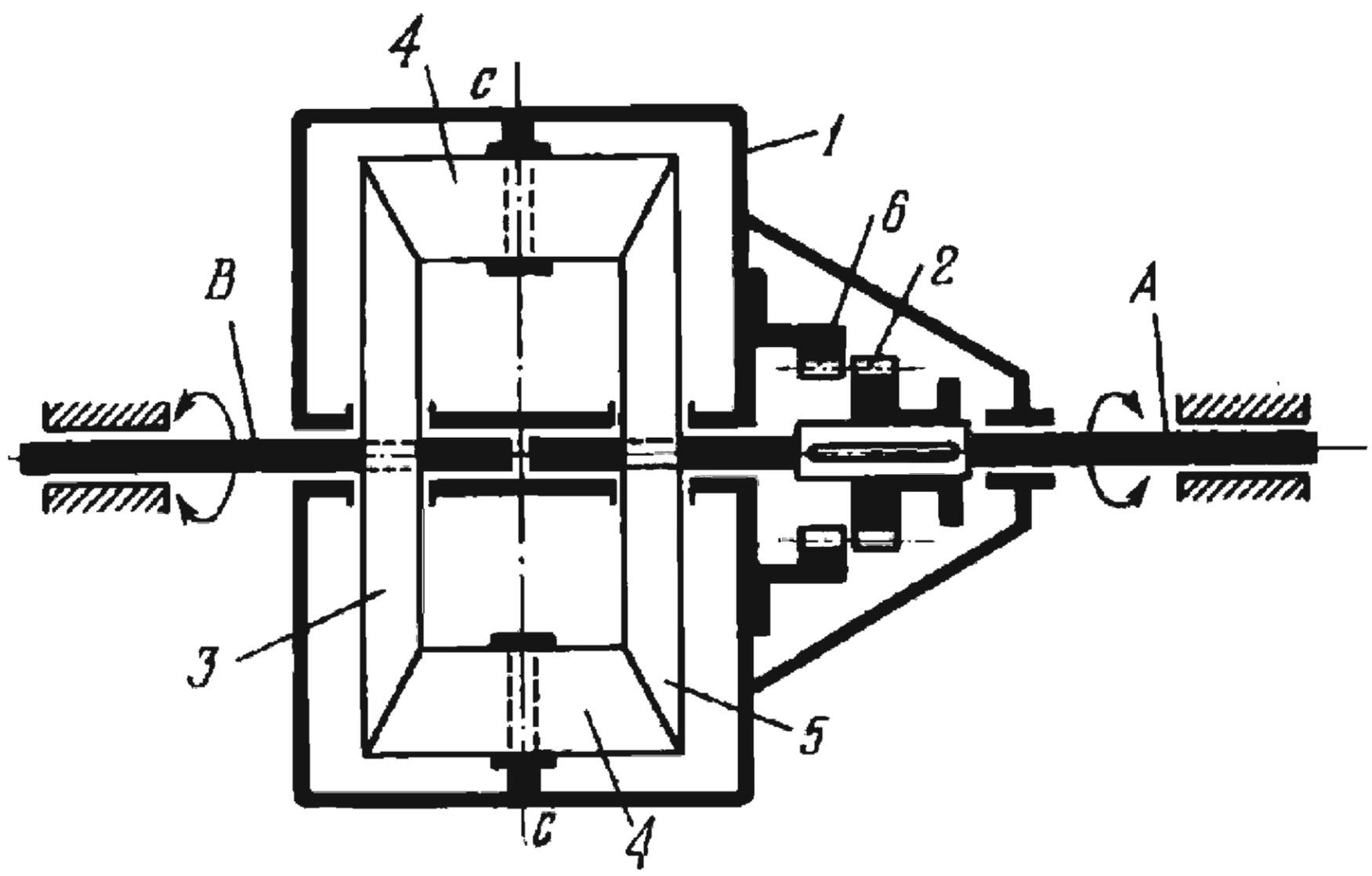

Two bevel sun gears of equal diameter, *3* and *5*, are keyed to axle shafts *B* and *A* and mesh with bevel planet gears *4* which rotate freely on studs *c* of the carrier, designed as housing *1*. Housing *1* rotates about axle shafts *A* and *B*. The speeds n_3, n_5 and n_1 of gears *3* and *5*, and housing *1* (in rpm) are related by the equation

$$n_1 = \frac{n_3 + n_5}{2}.$$

The mechanism has interlocking toothed clutch *2* which slides along axle shaft *A* on a key and can be shifted into engagement with clutch member *6*, designed as an internal gear and rigidly attached to housing *1*. When interlocking clutch *2* is disengaged, axle shafts *A* and *B* rotate at different speeds depending upon the resistance torque applied to them. If clutch *2* is engaged, axle shafts *A* and *B* rotate at a speed equal to that of housing *1*.

2918	DIFFERENTIAL GEARING AND SCREW MECHANISM	CxG DR

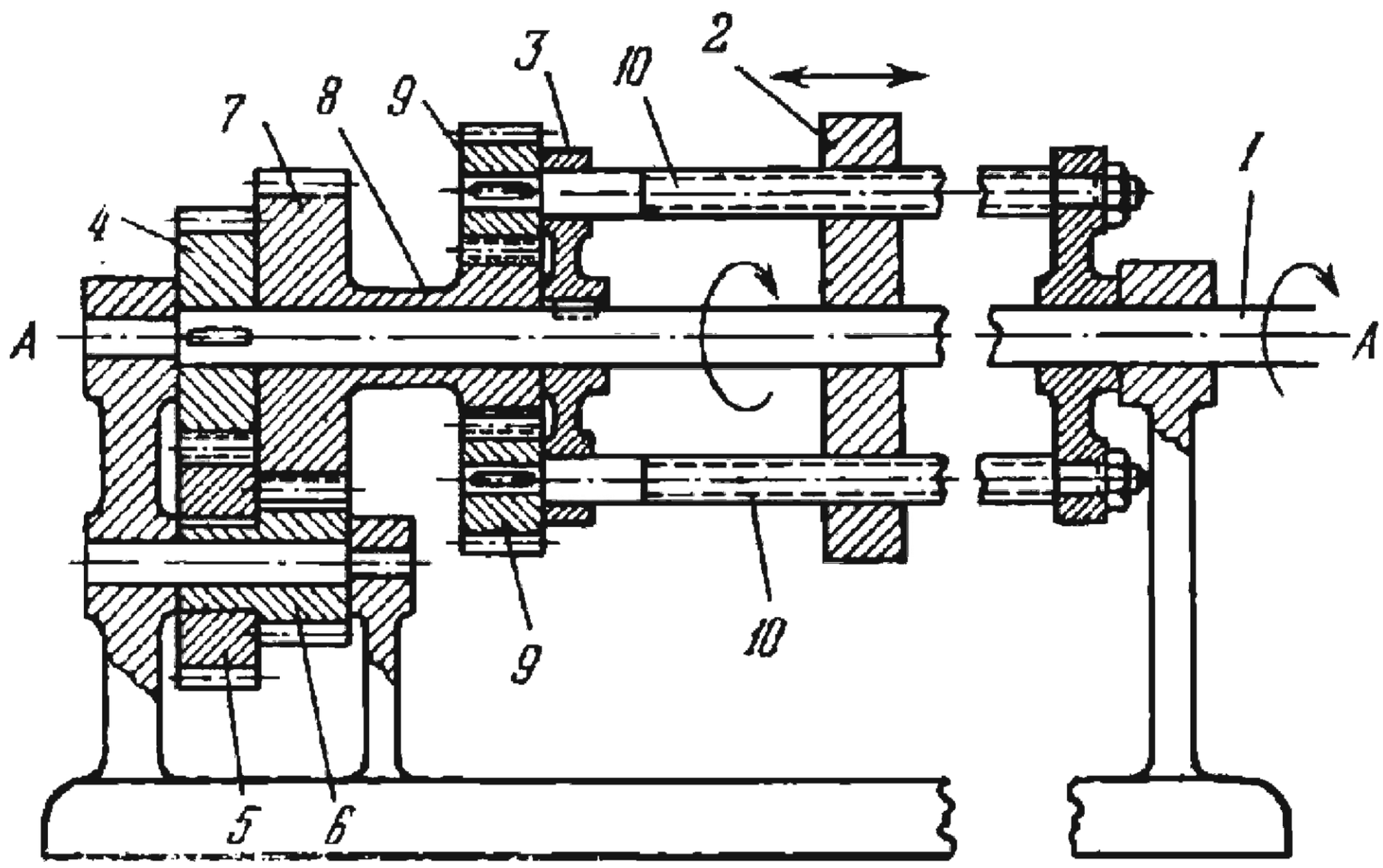

Carrier *3* and gear *4* are keyed to shaft *1* and rotate about fixed axis *A-A*. Two planet gears *9* of equal diameter are connected by turning pairs to carrier *3* and mesh with sun gear *8* which rotates freely on shaft *1*. Gear *7* is rigidly attached to (or integral with) gear *8* and meshes with gear *6* which is rigidly attached to gear *5*. Gear *5* meshes with gear *4*. Planet gears *9* are keyed to screws *10* which are connected by screw pairs to carriage *2*. When shaft *1* rotates, carriage *2* rotates about axis *A-A* and travels along this axis.

2919	WEDGE-TOOTHED MECHANISM OF A DIFFERENTIAL	CxG DR

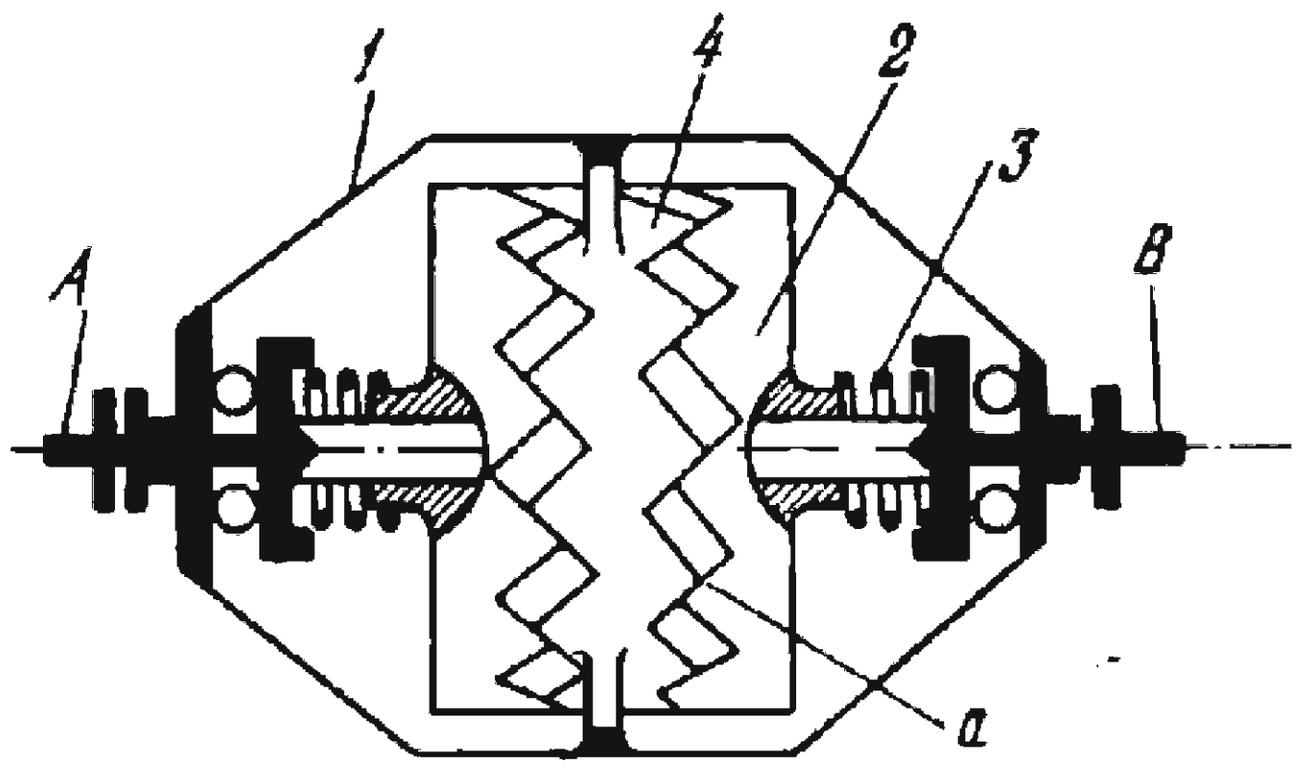

Clutch members *2*, having wedge-shaped teeth *a* with large angles between the sides of the teeth, are mounted on axle shafts *A* and *B* so that they can slide along the shafts. Compressed springs *3* force clutch members *2* against link *4* which is connected to housing *1* of the differential. The additional degree of freedom, required to enable axle shafts *A* and *B* to rotate at different speeds, is provided by the sliding of wedge-shaped teeth *a* of clutch members *2* over the wedge-shaped teeth of link *4*.

2920	SPATIAL DIFFERENTIAL WOBBLE-PLATE MECHANISM	CxG DR

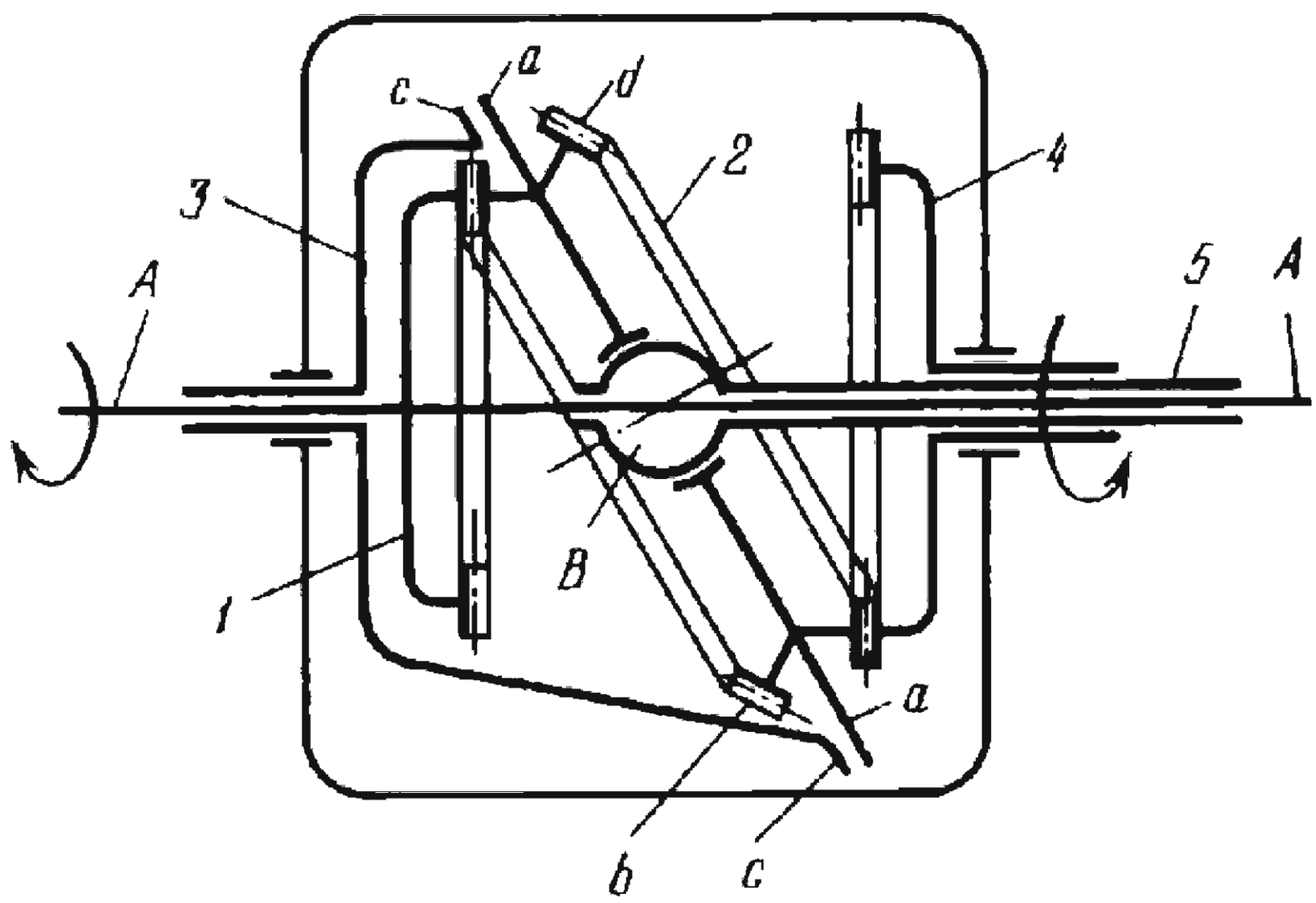

Carrier *3* and gear *4* rotate freely about shaft *A*. Gear *1* is keyed to shaft *A* and meshes with planet gear *2* which is made up of two identical gear rims, *d* and *b*. Rim *d* of planet gear *2* meshes with gear *4*. Rigidly attached to planet gear *2* is wobble plate *a* which slides along slanted face *c* of carrier *3*. Planet gear *2* is connected by spherical pair *B* to fixed link *5*. The speeds n_1, n_4 and n_3 of gears *1* and *4*, and carrier *3* (in rpm) are related by the equation

$$i_{14} = \frac{n_1 - n_3}{n_4 - n_3}$$

where i_{14} is the transmission ratio and equals

$$i_{14} = \frac{z_4}{z_1}$$

where z_1 and z_4 are the numbers of teeth of gears *1* and *4*.

2921	SPATIAL DIFFERENTIAL BEVEL GEARING MECHANISM WITH CROWN GEARS	CxG DR

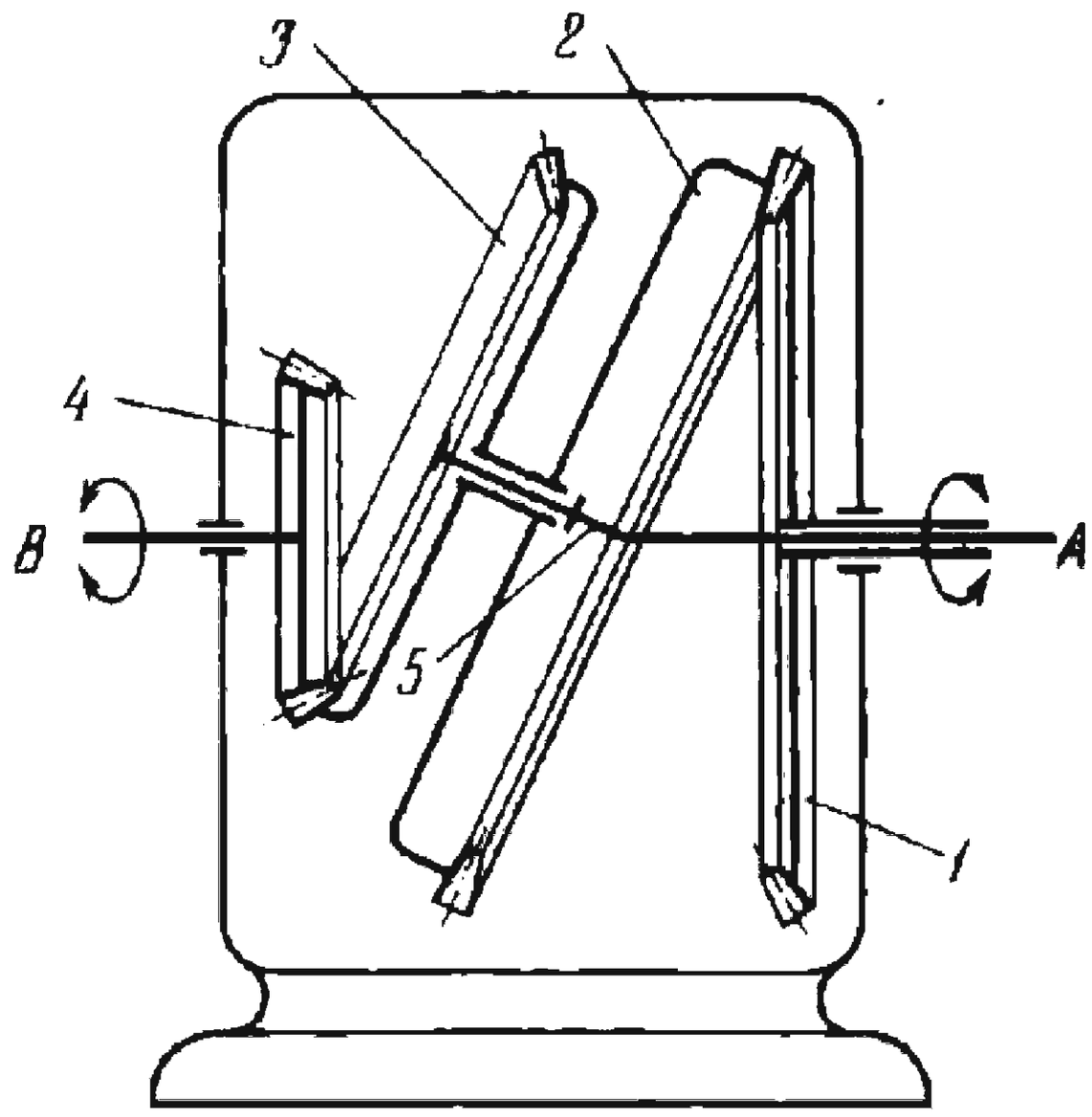

Bevel gear *1* rotates about fixed axis *A* and meshes with planet crown gear *2* which is rigidly attached to crown gear *3*. Gear *3* meshes with bevel gear *4* which rotates about fixed axis *B*. Planet crown gears *2* and *3* are connected by a turning pair to carrier *5* which rotates about axis *A*. The speeds n_1, n_4 and n_5 of gears *1* and *4*, and carrier *5* (in rpm) are related by the equation

$$n_5 = \frac{z_2 z_4 n_4 - z_1 z_3 n_1}{z_2 z_4 - z_1 z_3}$$

where z_1, z_2, z_3 and z_4 are the numbers of teeth of gears *1*, *2*, *3* and *4*.

2922	DIFFERENTIAL BEVEL REDUCING GEAR MECHANISM	CxG DR

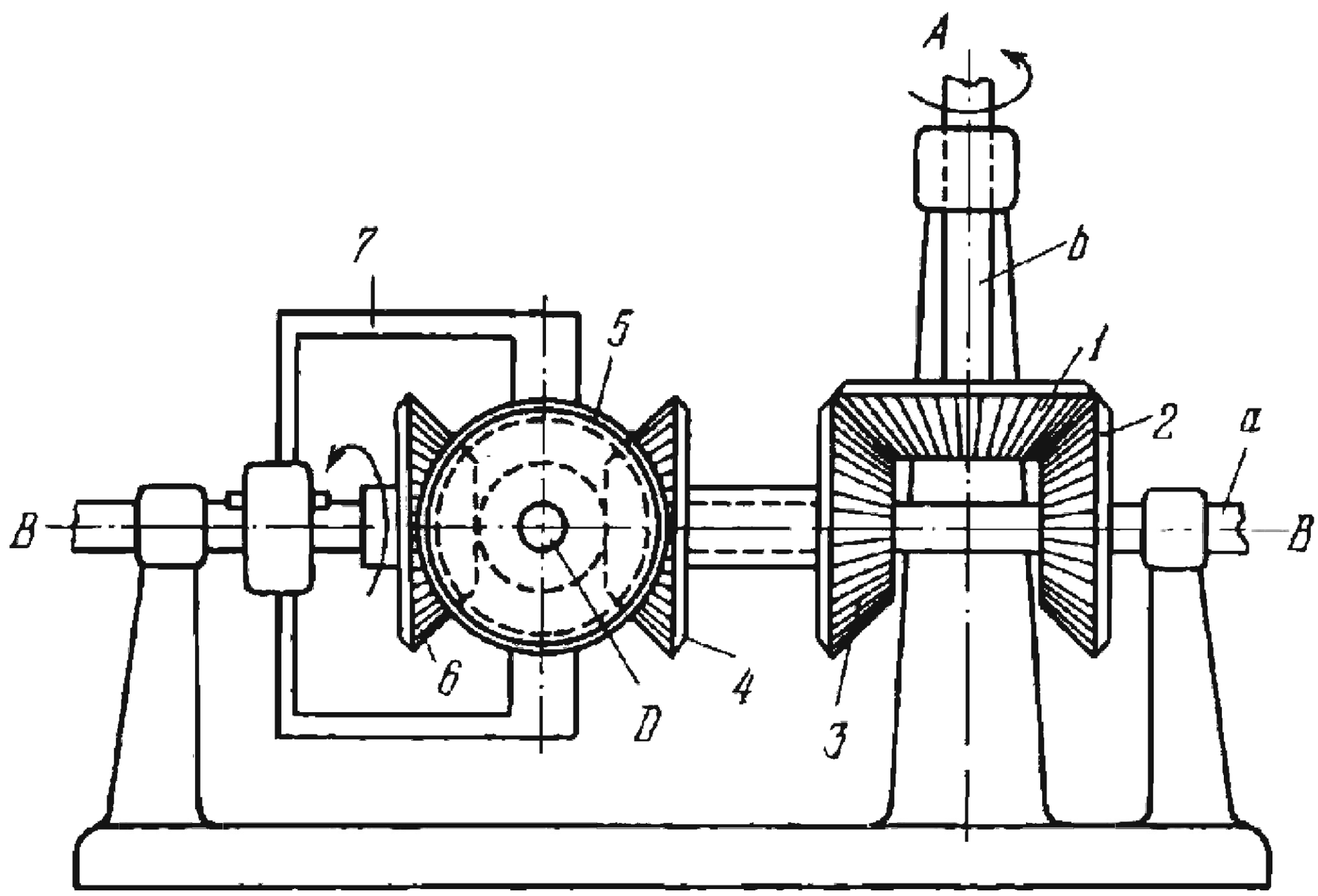

Bevel gear *1* is keyed to shaft *b*, rotates about fixed axis *A* and meshes with bevel gears *2* and *3* of equal size. Gear *2* is keyed to shaft *a* and rotates about fixed axis *B-B*. Gear *3* is rigidly attached to bevel gear *4* and freely rotates about shaft *a*. Frame *7*, the carrier, is keyed to shaft *a* and is connected by turning pair *D* to bevel planet gear *5* which meshes with bevel gears *4* and *6*. Gear *6* rotates freely on shaft *a*. The numbers of teeth of gears *1*, *2*, *3*, *4*, *5* and *6* satisfy the conditions:

$$z_1 = z_2 = z_3 \quad \text{and} \quad z_4 = z_5 = z_6.$$

The speeds n_1 and n_6 of gears *1* and *6* (in rpm) are related by the equation

$$n_6 = -3n_1.$$

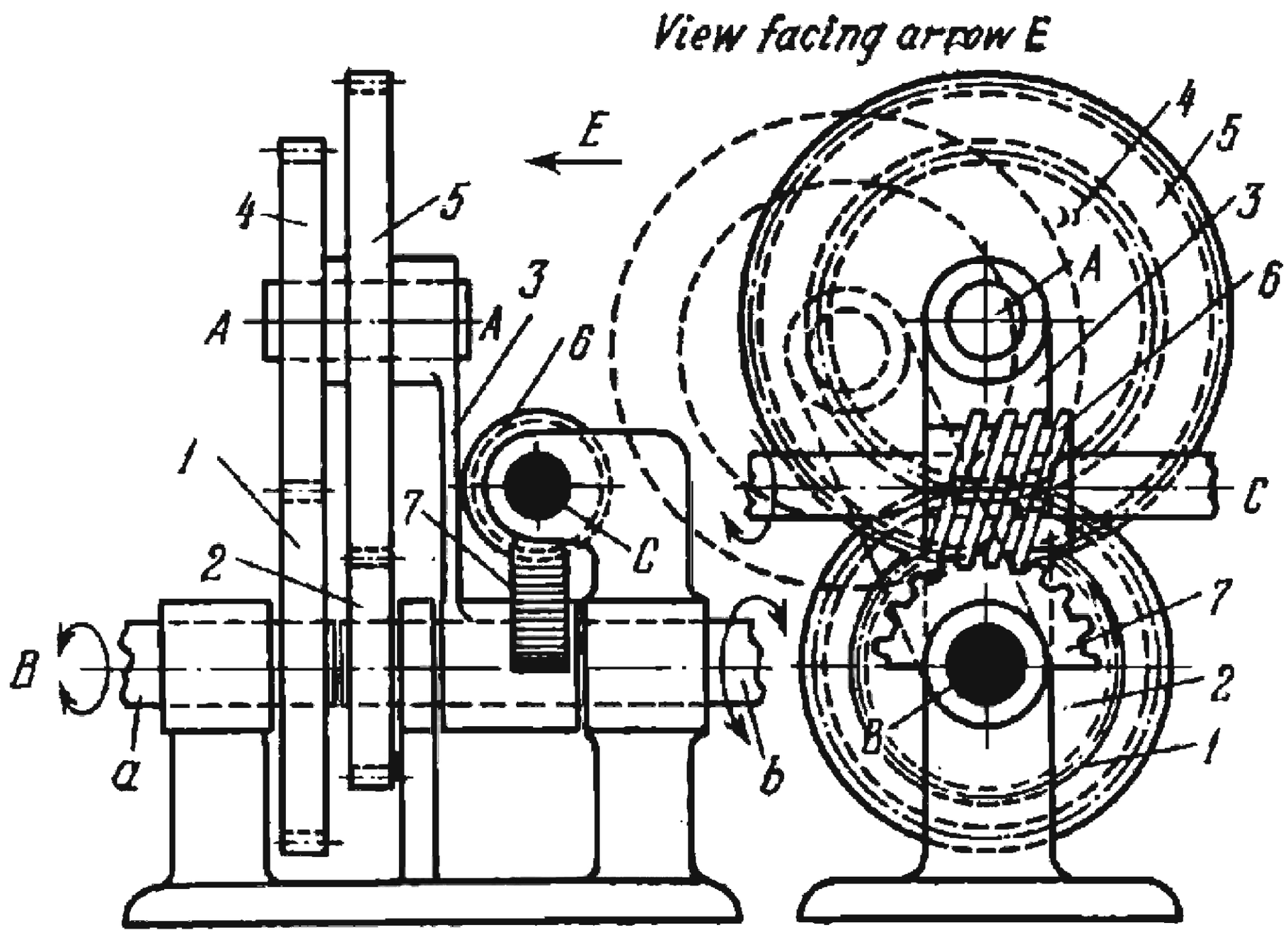

Gear *1* is keyed to shaft *a*, rotates about fixed axis *B* and meshes with gear *4* which is rigidly attached to gear *5*. Gear *5* meshes with gear *2* which is keyed to shaft *b* and rotates about axis *B*. Gears *4* and *5* are connected by turning pair *A* to carrier *3* which rotates about shaft *b*. Worm wheel segment *7* is rigidly attached to carrier *3* and meshes with worm *6* which rotates about fixed axis *C*. Since the worm gearing is self-locking, carrier *3* is stationary when gear *1* rotates, and the speeds n_1 and n_2 of gears *1* and *2* are related by the equation

$$n_2 = n_1 \frac{z_1 z_5}{z_2 z_4}$$

where z_1, z_2, z_4 and z_5 are the numbers of teeth of gears *1*, *2*, *4* and *5*. Here the mechanism operates as an ordinary double reducing gear. If worm *6* is rotated, the mechanism operates as a differential reducing gear because worm wheel segment *7* turns carrier *3* through a certain angle within the limits allowed by the included angle of the segment. In this case, the speeds n_1, n_2 and n_3 of gears *1* and *2*, and carrier *3* are related by the equation

$$n_3 = n_1 \frac{z_1 z_5}{z_1 z_5 - z_2 z_4} - n_2 \frac{z_2 z_4}{z_1 z_5 - z_2 z_4}.$$

2924	WORM-GEAR MECHANISM OF A DIFFERENTIAL	CxG DR

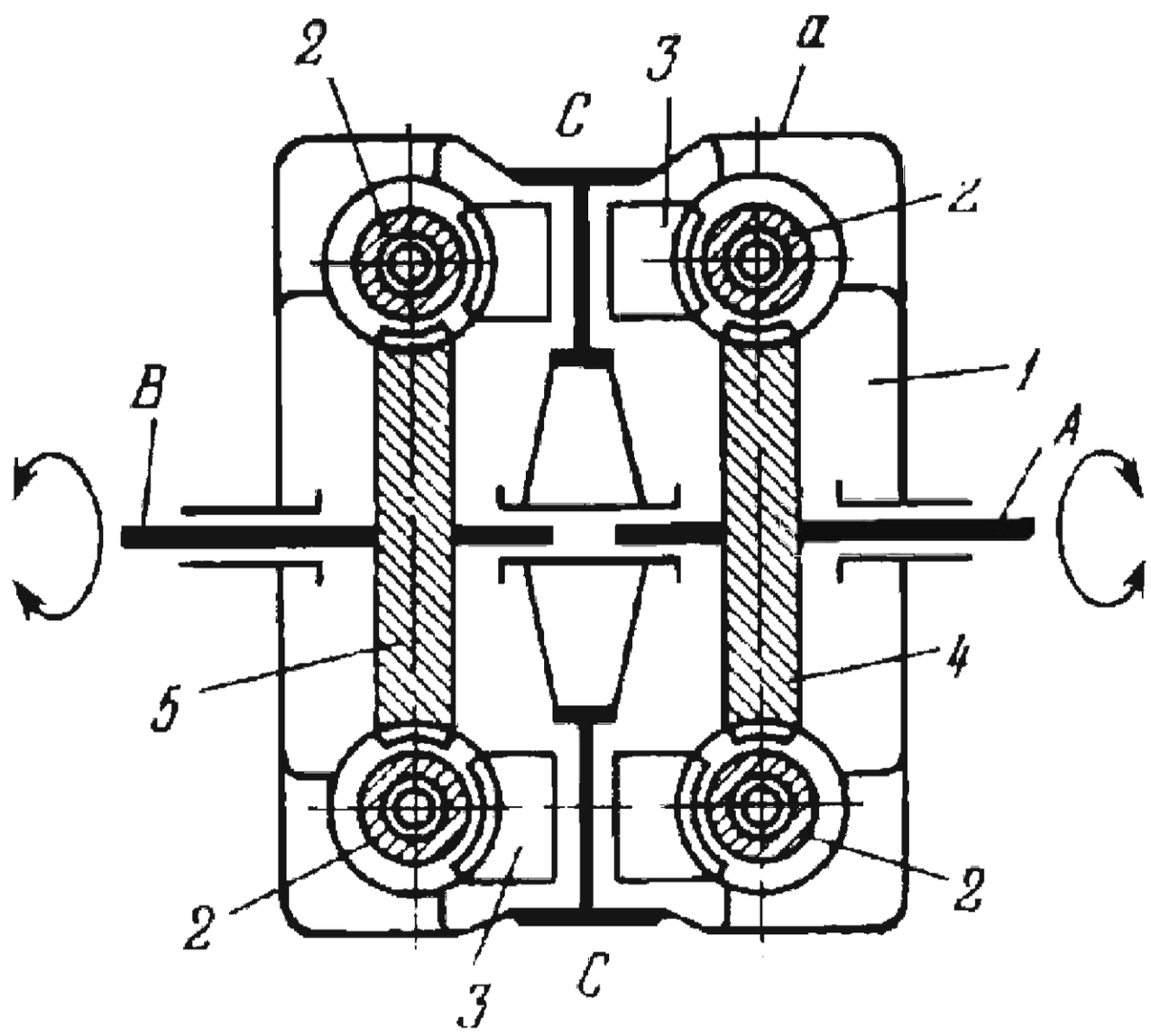

Carrier *1* is designed as housing *a* which rotates about axle shafts *A* and *B*. Four identical planet worms *2* are connected by turning pairs to housing *a* and mesh with two worm wheels *3* of equal size, connected by turning pairs *C* to housing *a*, and two more worm wheels, *4* and *5*, of equal size. Wheels *4* and *5* are keyed to axle shafts *A* and *B*. The speeds n_1, n_4 and n_5 of housing *1*, and of worm wheels *4* and *5* (in rpm) are related by the equation

$$n_1 = \frac{n_4 + n_5}{2}.$$

2925	WORM-GEAR MECHANISM OF A DIFFERENTIAL	CxG DR

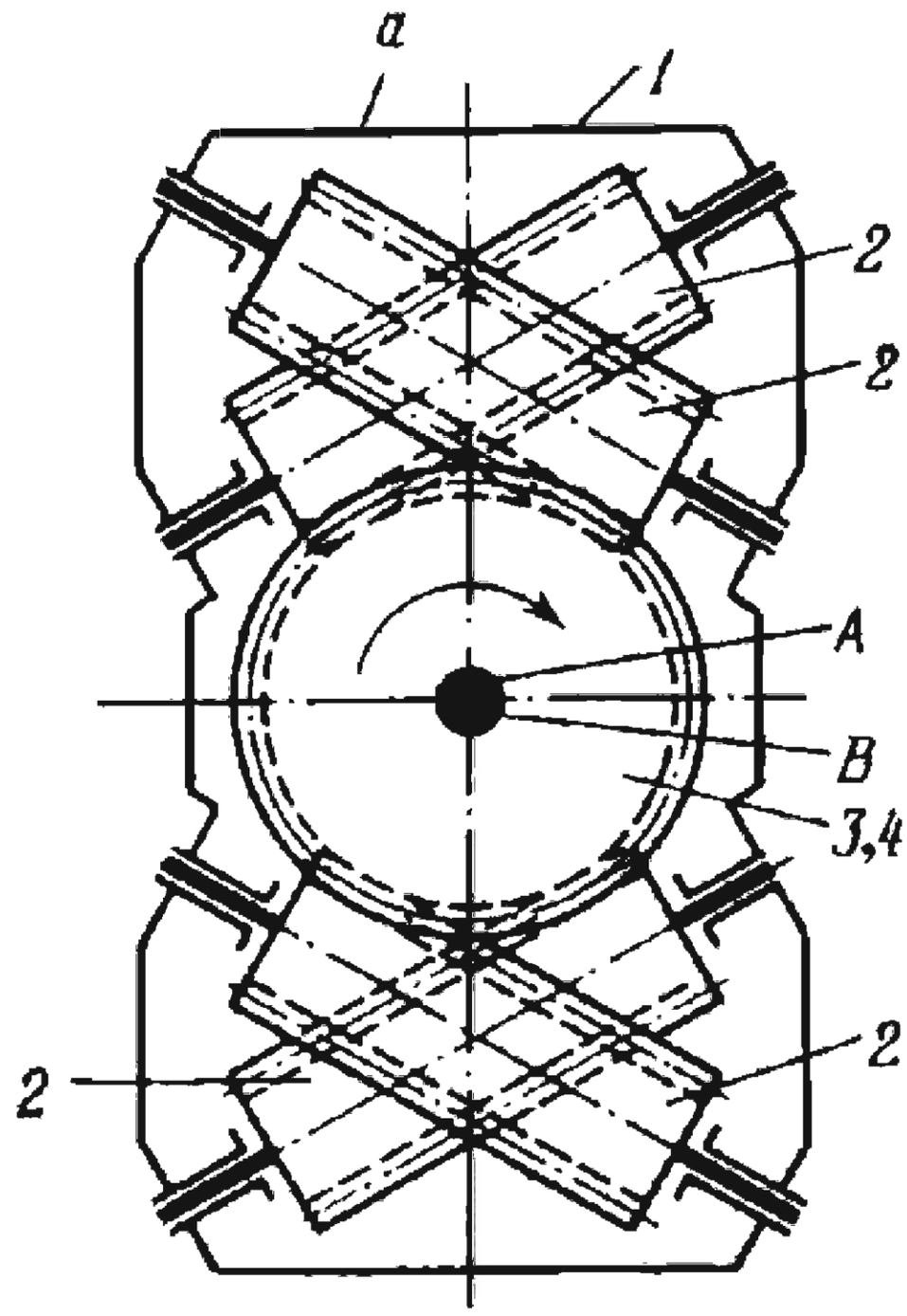

Carrier *1* is designed as housing *a* which rotates about axle shafts *A* and *B*. Shafts *A* and *B* are perpendicular to the plane of the drawing. Four identical planet worms *2* are connected by turning pairs to housing *a* and mesh with each other in pairs and with worm wheels *3* and *4*. Wheels *3* and *4* are keyed to axle shafts *A* and *B*. The speeds n_1, n_3 and n_4 of housing *a*, and of worm wheels *3* and *4* are related by the equation

$$n_1 = \frac{n_3 + n_4}{2}.$$

2926	COAXIAL DOUBLE STRAIN WAVE GEARING MECHANISM WITH A CAM-TYPE WAVE GENERATOR	CxG SW

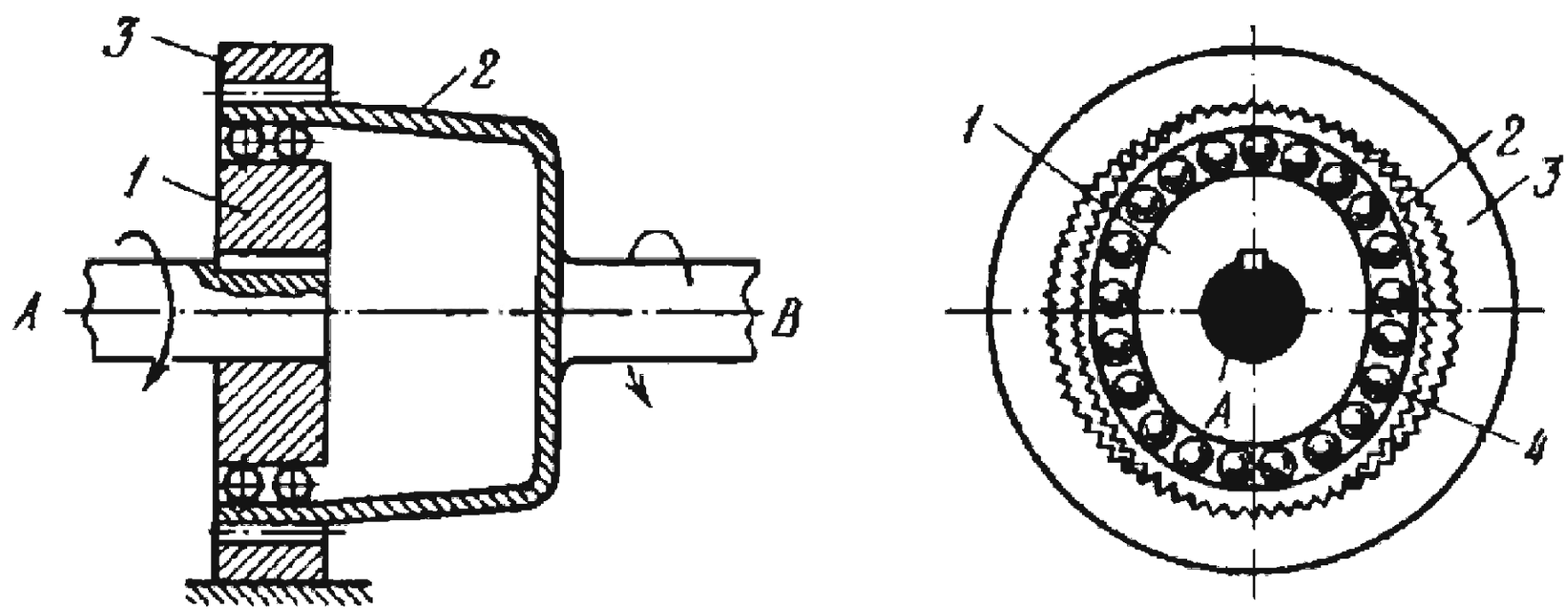

Wave generator *1* is a cam of elliptical shape and rotates about fixed axis *A*. Flexible link *2*, having teeth on its outside circumference, rotates about fixed axis *B* and meshes at two opposing areas with the internal teeth of circular link *3* which is rigidly attached to the base, i.e. fixed. A large number of teeth are simultaneously in engagement in two areas located symmetrically with respect to the minor axis of the elliptical cam. Balls *4* are arranged between wave generator *1* and flexible link *2* to facilitate radial deflection of the link. The transmission ratio from generator *1* to flexible link *2* is

$$i_{12}=\frac{\omega_1}{\omega_2}=\frac{n_1}{n_2}=-\frac{z_2}{2}$$

where ω_1, ω_2, n_1 and n_2 are the angular velocities and speeds (in rpm) of wave generator *1* and link *2*; and z_2 is the number of teeth of link *2*, which is equal to $z_2 = z_3 - 2$.

2927	COAXIAL DOUBLE STRAIN WAVE GEARING MECHANISM WITH A BALL-TYPE WAVE GENERATOR	CxG SW

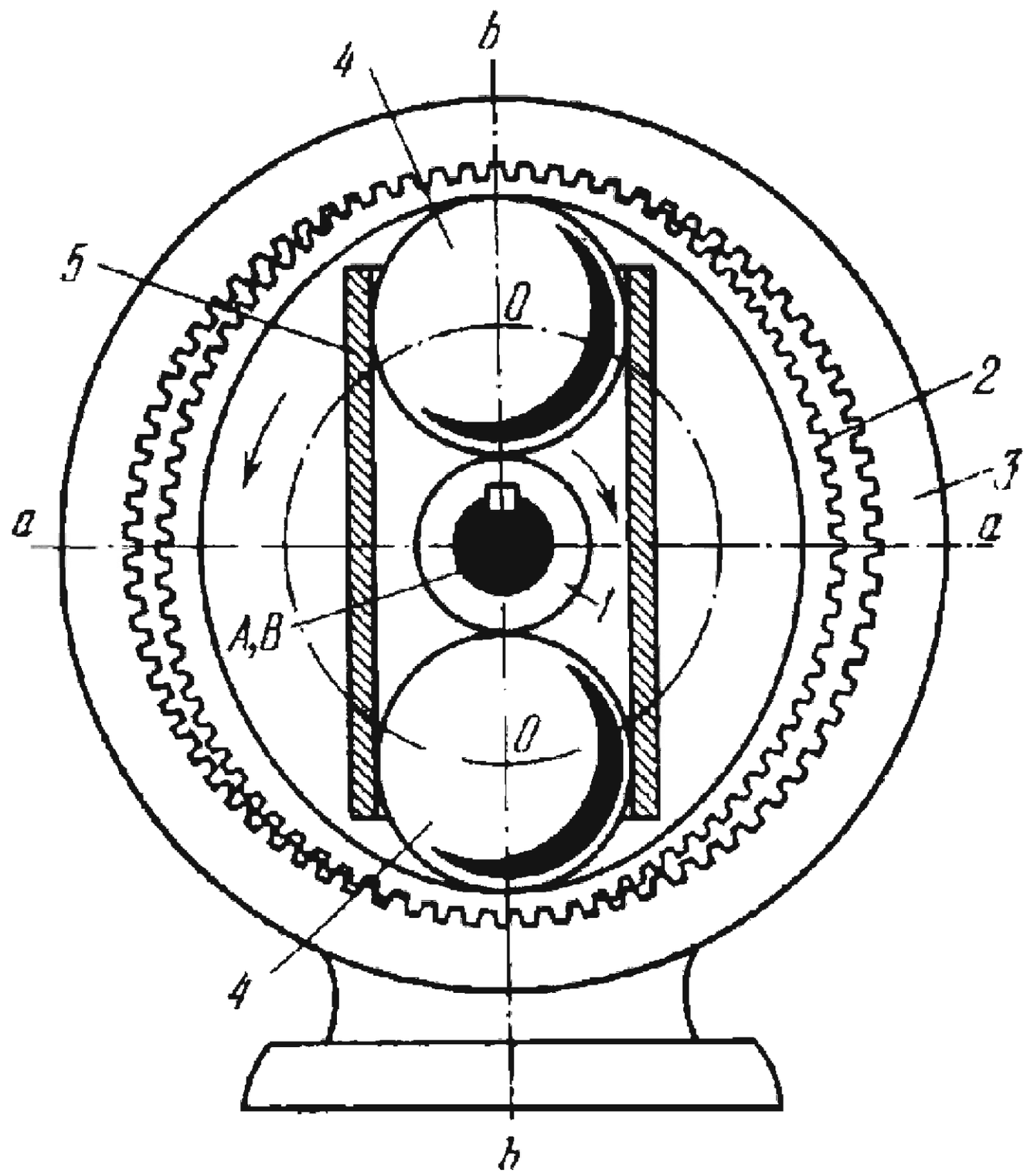

The wave generator is designed as holder *5* which contains two balls *4* and is driven by circular cylindrical friction wheel *1*. Wheel *1* rotates about fixed axis *A*. Flexible (radially deflectable) ring gear *2*, having teeth on its outside circumference, rotates about fixed axis *B* and meshes at two opposing areas with the teeth of circular internal gear *3* which is rigidly attached to the base, i.e. fixed. Balls *4* radially deflect ring gear *2* so that a large number of teeth are simultaneously in engagement in two areas located symmetrically with respect to axis *a-a* which is perpendicular to axis *b-b* passing through the centres *O* of balls *4*. The transmission ratio from wave generator *5* to link *2* is

$$i_{52} = \frac{\omega_5}{\omega_2} = \frac{n_5}{n_2} = -\frac{z_2}{2}$$

where ω_5, ω_2, n_5 and n_2 are the angular velocities and speeds (in rpm) of generator *5* and link *2*; and z_2 is the number of teeth of link *2*, which is equal to $z_2 = z_3 - 2$.

2928	COAXIAL TWO-STAGE DOUBLE STRAIN WAVE GEARING MECHANISM WITH AN ELLIPTICAL WAVE GENERATOR	CxG SW

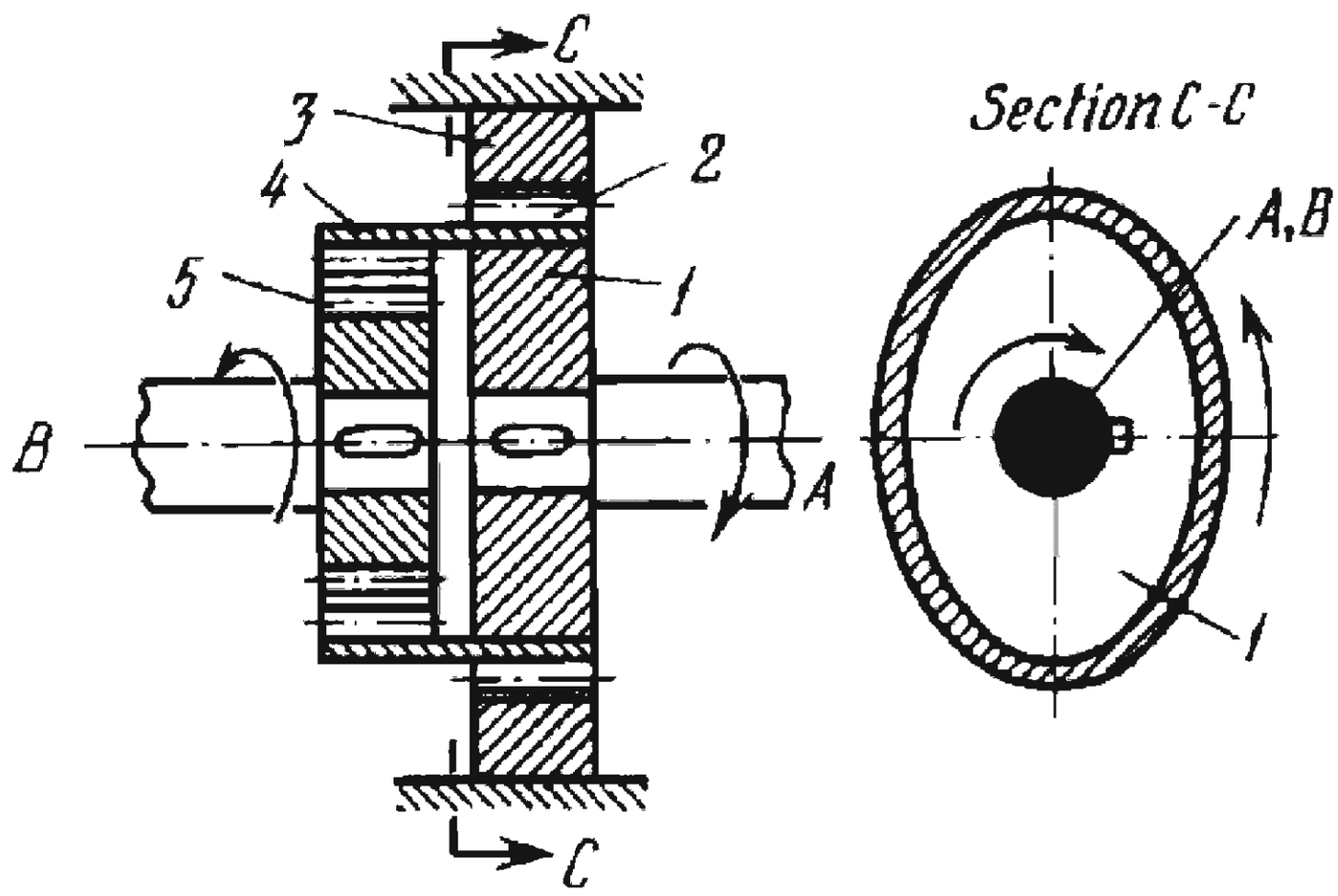

Wave generator *1* is a cam of elliptical shape and rotates about fixed axis *A*. The flexible (radially deflectable) link consists of external ring gear *2* and internal ring gear *4*, rigidly attached to (or integral with) each other, with numbers of teeth, z_2 and z_4, that differ only slightly. Flexible ring gear *2* meshes at two opposing areas with circular internal gear *3* which is rigidly attached to the base, i.e. fixed. Flexible internal ring gear *4* meshes at two opposing areas with circular external gear *5* which rotates about fixed axis *B*. The transmission ratio from wave generator *1* to gear *5* is

$$i_{15}=\frac{\omega_1}{\omega_5}=\frac{n_1}{n_5}=-\frac{z_3z_5}{z_3+z_5+2}$$

where ω_1, ω_5, n_1 and n_5 are the angular velocities and speeds (in rpm) of generator *1* and gear *5*; and z_3 and z_5 are the numbers of teeth of gears *3* and *5*, which are equal to $z_3 = z_2 + 2$ and $z_5 = z_4 - 2$.

2929	COAXIAL TWO-STAGE DOUBLE STRAIN WAVE GEARING MECHANISM WITH AN ELLIPTICAL WAVE GENERATOR	CxG SW

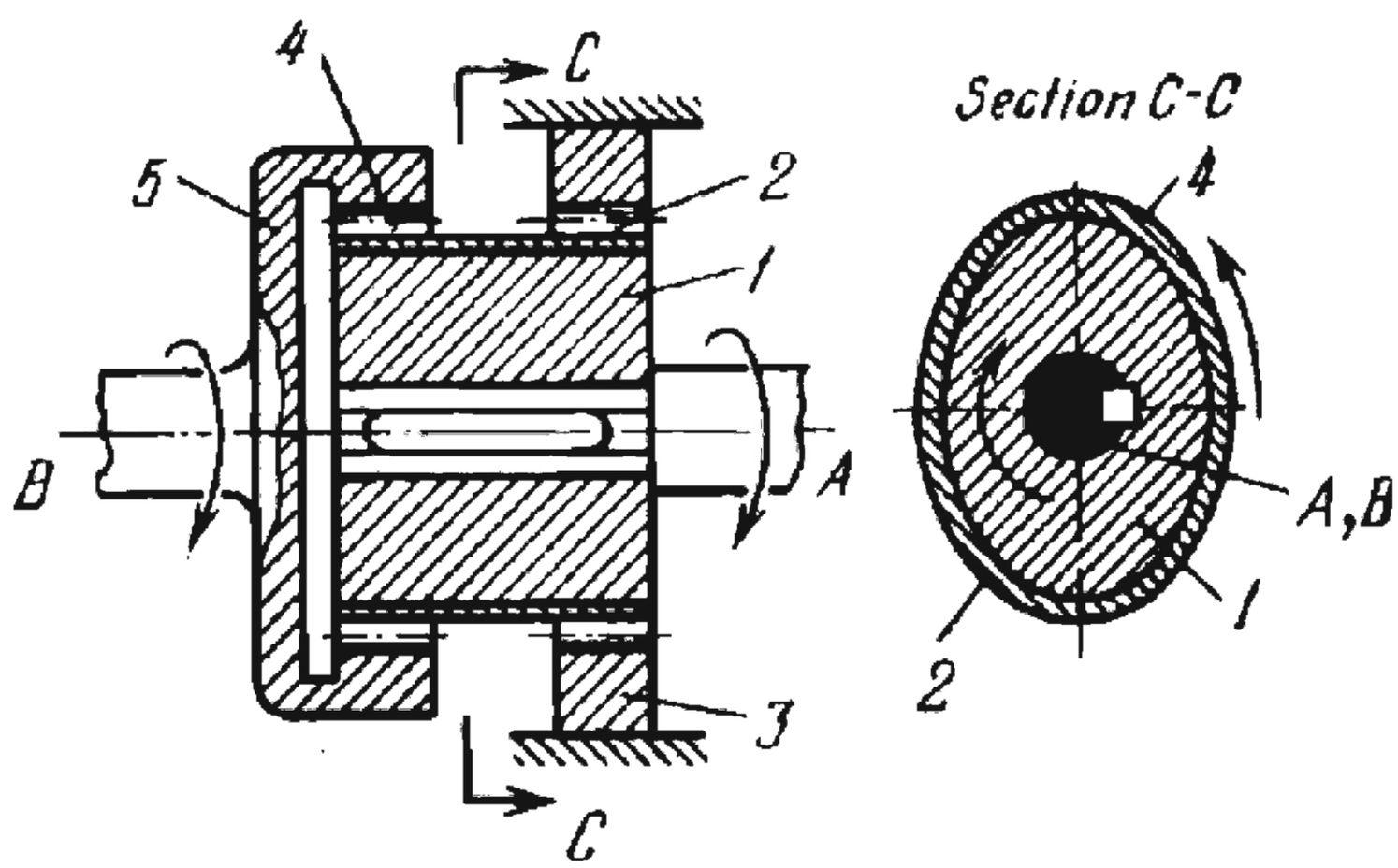

Wave generator *1* is a cam of elliptical shape and rotates about fixed axis *A*. The flexible (radially deflectable) link consists of external ring gears *2* and *4*, rigidly attached to (or integral with) each other, with numbers of teeth, z_2 and z_4, that differ only slightly. Flexible ring gear *2* meshes at two opposing areas with circular internal gear *3* which is rigidly attached to the base, i.e. fixed. Flexible ring gear *4* meshes at two opposing areas with circular internal gear *5* which rotates about fixed axis *B*. The transmission ratio from wave generator *1* to gear *5* is

$$i_{15}=\frac{\omega_1}{\omega_5}=\frac{n_1}{n_5}=\frac{z_3z_5}{z_5-z_3+2}$$

where ω_1, ω_5, n_1 and n_5 are the angular velocities and speeds (in rpm) of generator *1* and gear *5*; and z_3 and z_5 are the numbers of teeth of gears *3* and *5*, which are equal to $z_3 = z_2 + 2$ and $z_5 = z_4 + 2$.

2930	COAXIAL TRIPLE STRAIN WAVE GEARING MECHANISM WITH A ROLLER WAVE GENERATOR	CxG SW

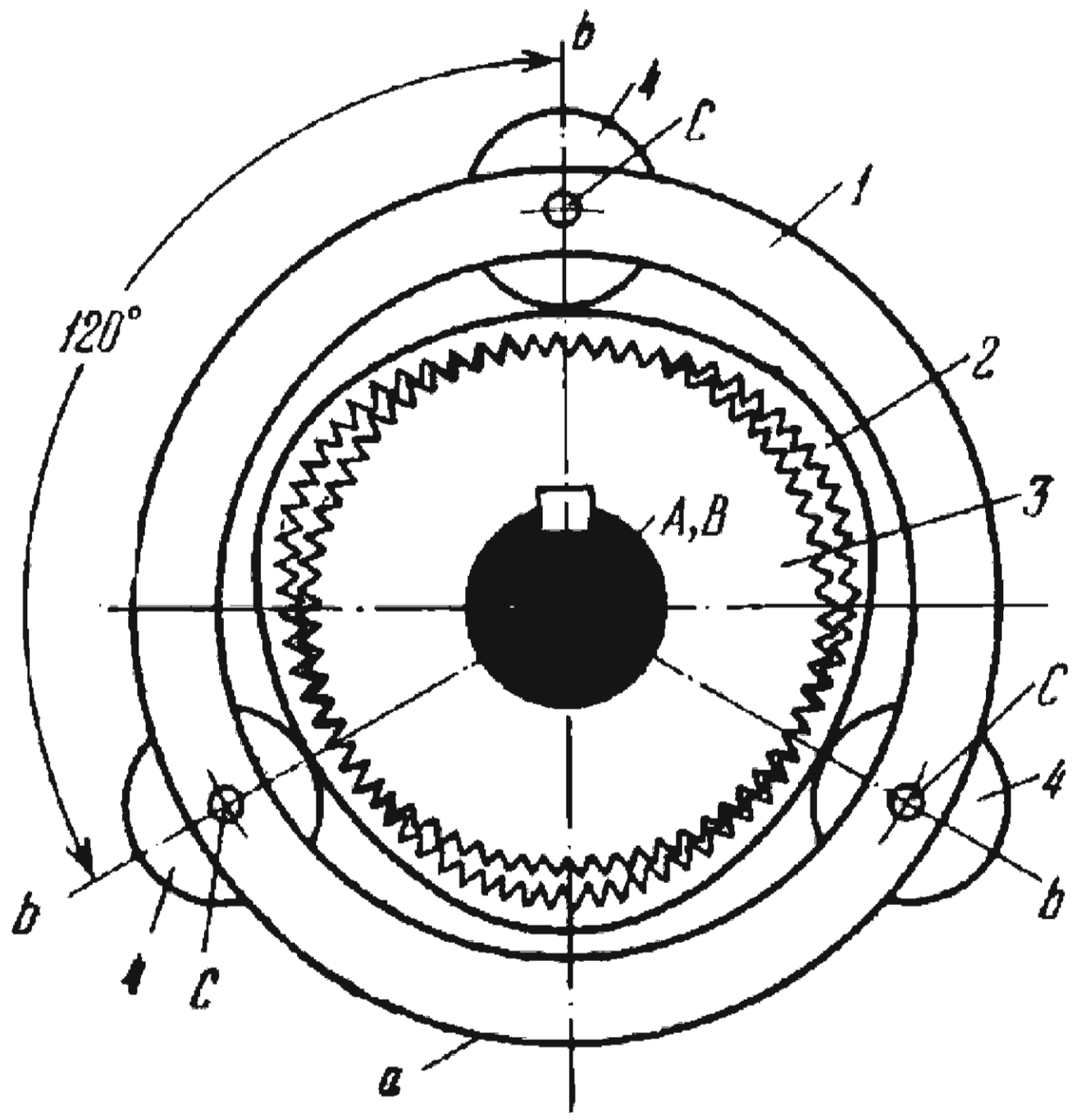

Wave generator *1* is designed as ring *a* carrying three round rollers *4* which rotate about axes *C* of studs located at angles of 120° in ring *a*. Wave generator *1* rotates about fixed axis *A*. Flexible (radially deflectable) link *2*, having teeth on its inside circumference, rotates about fixed axis *B* and meshes at three symmetrically located areas with the external teeth of circular link *3* which is rigidly attached to the base, i.e. fixed. A large number of teeth are simultaneously in engagement in areas which are symmetrical with respect to axes *b*. The transmission ratio from generator *1* to link *2* is

$$i_{12}=\frac{\omega_1}{\omega_2}=\frac{n_1}{n_2}=\frac{z_2}{3}$$

where ω_1, ω_2, n_1 and n_2 are the angular velocities and speeds (in rpm) of generator *1* and link *2*; and z_2 is the number of teeth of link *2*, which is equal to $z_2 = z_3 + 3$.

2931	COAXIAL TRIPLE STRAIN WAVE GEARING MECHANISM WITH A BALL-TYPE WAVE GENERATOR	CxG SW

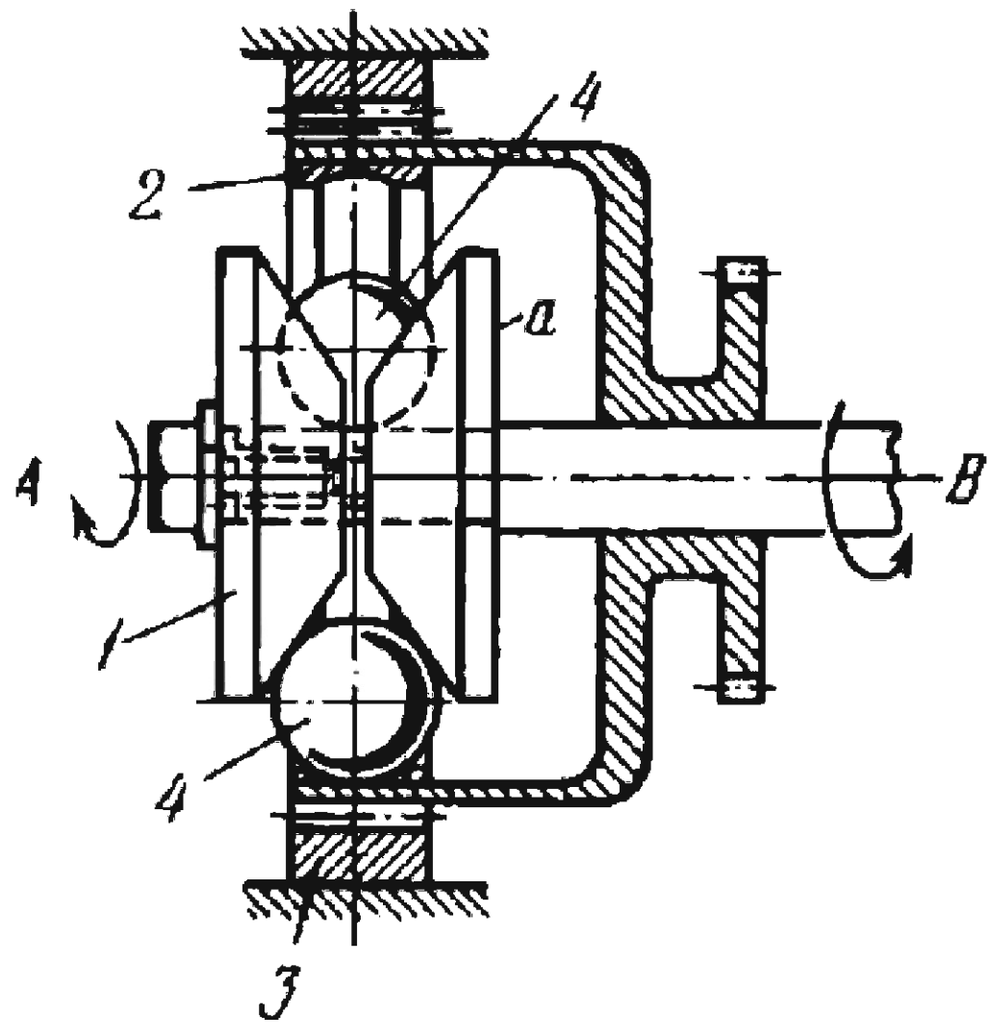

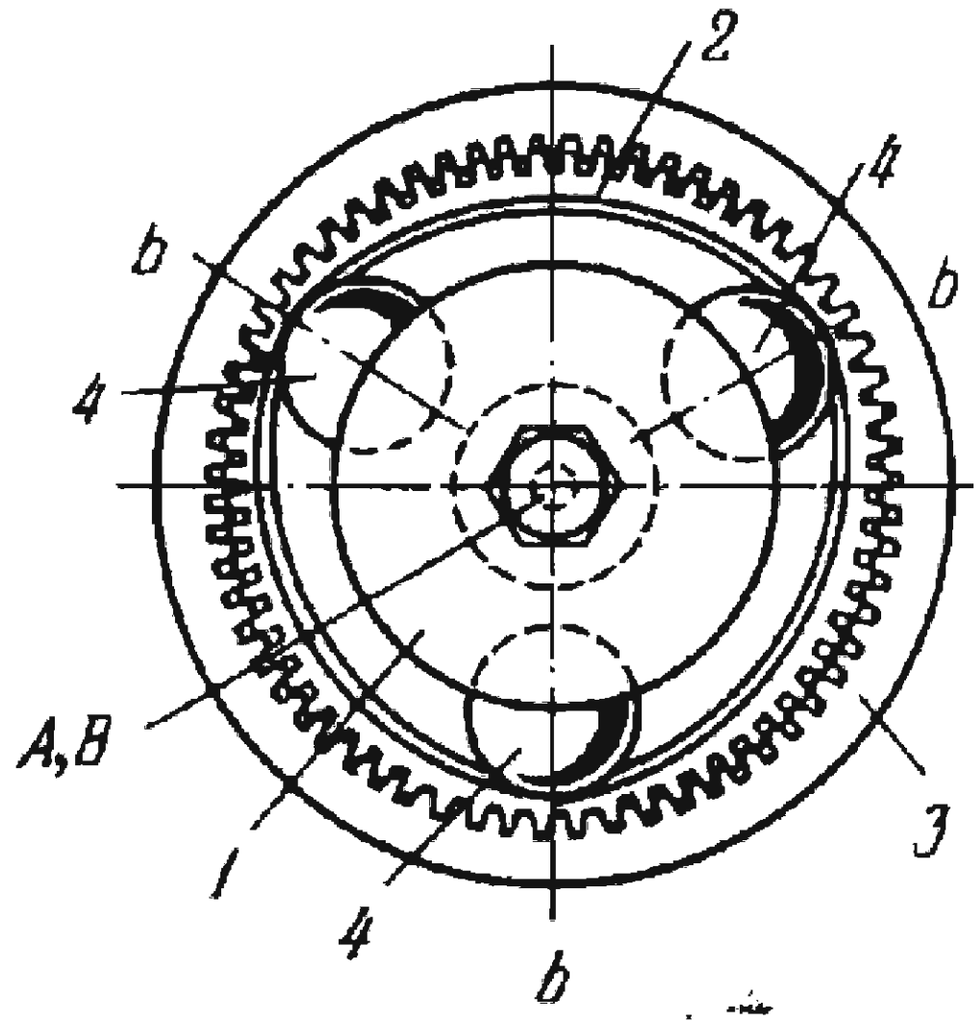

Wave generator *1* is designed as two conical members *a*, facing each other, around which balls *4* roll. The axes *b* of the balls form angles of 120°. Generator *1* rotates about fixed axis *A*. Flexible (radially deflectable) ring gear *2*, having teeth on its outside circumference, rotates about fixed axis *B* and meshes at three symmetrically located areas with teeth of circular internal ring gear *3*, which is rigidly attached to the base, i.e. fixed. A large number of teeth are simultaneously in engagement in areas which are symmetrical with respect to axes *b*. The transmission ratio from wave generator *1* to link *2* is

$$i_{12} = \frac{\omega_1}{\omega_2} = \frac{n_1}{n_2} = -\frac{z_2}{3}$$

where ω_1, ω_2, n_1 and n_2 are the angular velocities and speeds (in rpm) of generator *1* and link *2*; and z_2 is the number of teeth of link *2*, which is equal to $z_2 = z_3 - 3$.

2932	COAXIAL TRIPLE STRAIN WAVE GEARING MECHANISM WITH AN INTERNAL ROLLER WAVE GENERATOR	CxG SW

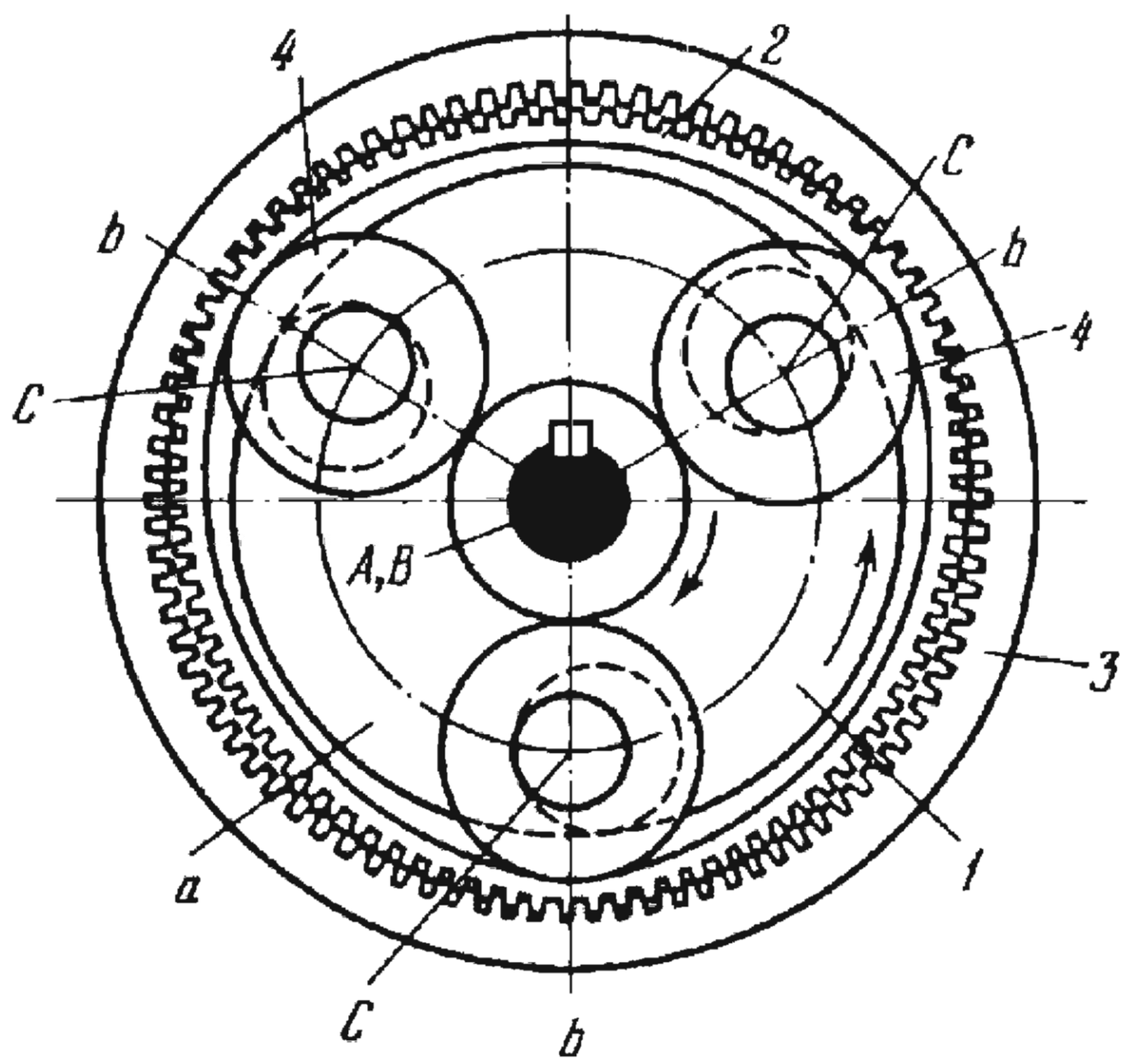

Wave generator *1* is designed as ring *a* carrying three round rollers *4* which rotate about axes *C* of studs located at angles of 120° in ring *a*. Wave generator *1* rotates about fixed axis *A*. Flexible (radially deflectable) ring gear *2*, having teeth on its outside circumference, rotates about fixed axis *B* and meshes at three symmetrically located areas with the teeth of circular internal ring gear *3*, which is rigidly attached to the base, i.e. fixed. A large number of teeth are simultaneously in engagement in areas which are symmetrical with respect to axes *b*. The transmission ratio from wave generator *1* to link *2* is

$$i_{12}=\frac{\omega_1}{\omega_2}=\frac{n_1}{n_2}=-\frac{z_2}{3}$$

where ω_1, ω_2, n_1 and n_2 are the angular velocities and speeds (in rpm) of generator *1* and link *2*; and z_2 is the number of teeth of link *2*, which is equal to $z_2 = z_3 - 3$.

2933	CLUTCH-TYPE BEVEL-GEAR REVERSING MECHANISM	CxG ML

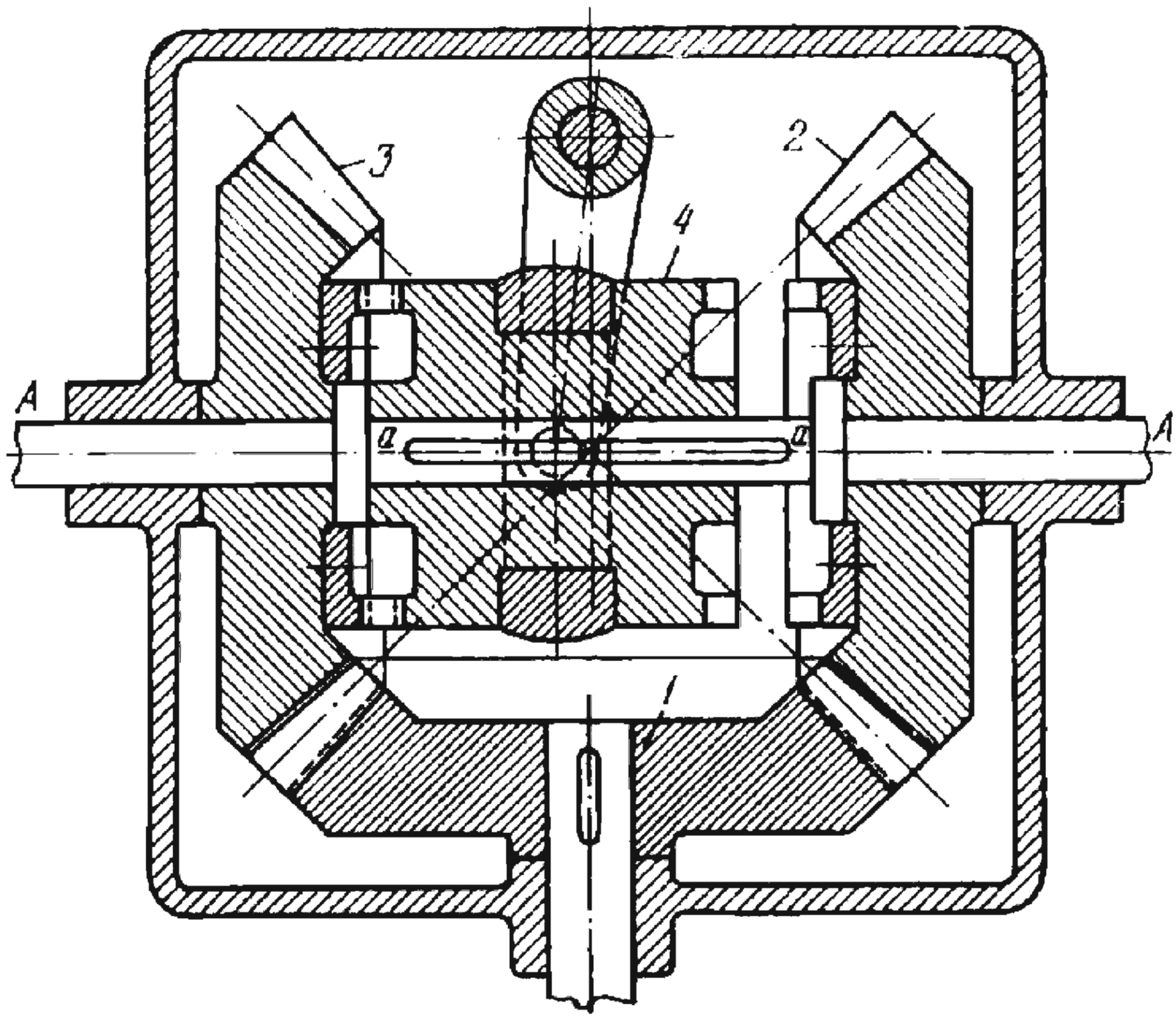

Bevel gear *1* drives bevel gears *2* and *3* which rotate freely on shaft *A*. The required direction of rotation of shaft *A* is obtained by shifting claw clutch *4* along feather *a-a* in shaft *A* into engagement with the clutch member of either gear *2* or *3*.

2934	DIFFERENTIAL INTERMITTENT GEARING MECHANISM	CxG ML

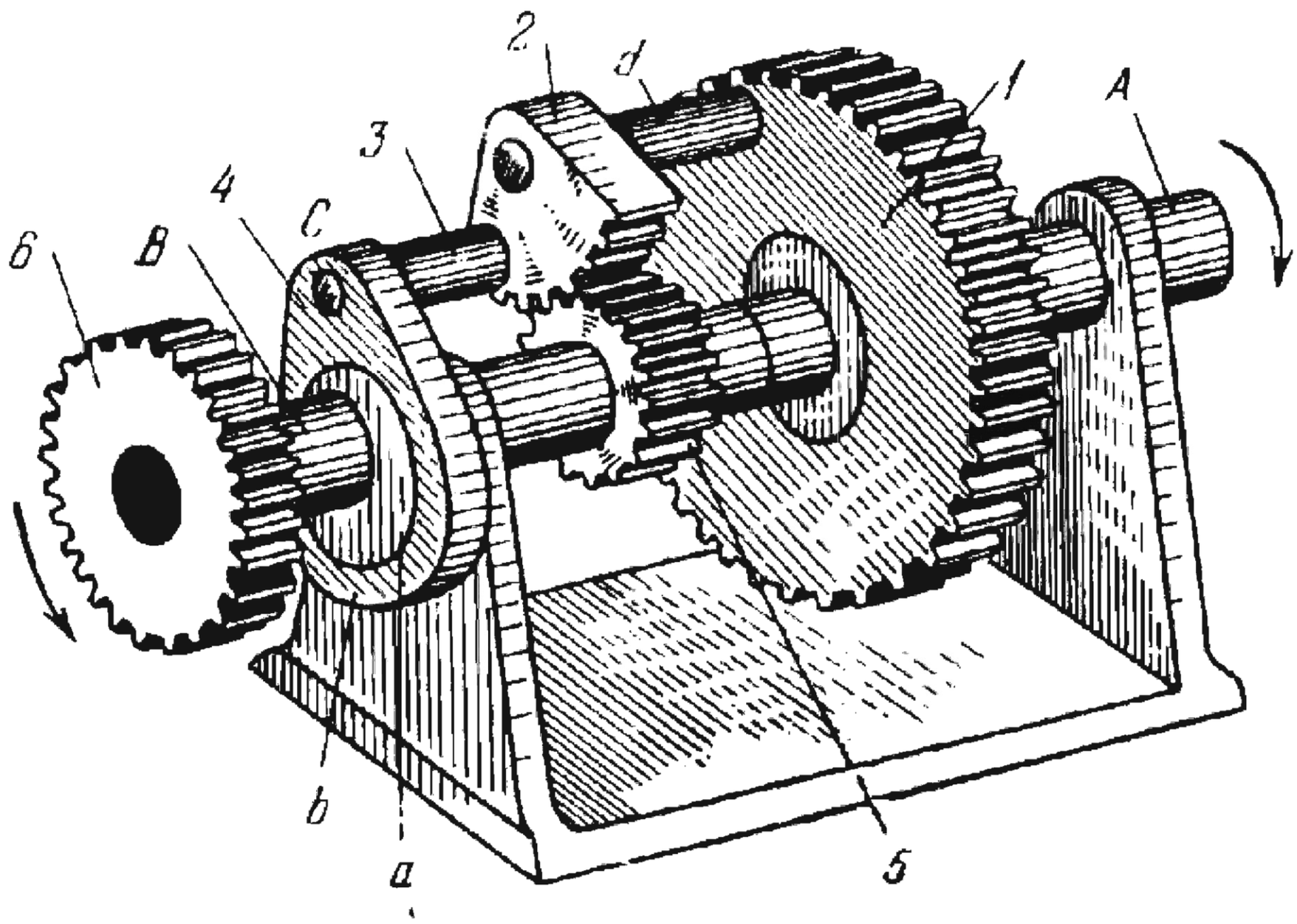

Shafts *A* and *B* are independently driven by gear trains of which the final links mesh with gears *1* and *6*. Freely mounted on pin *d* of gear *1* is segment gear *2* which meshes with driven gear *5*. Gear *5* rotates freely about shaft *B*. Round eccentric *a* is keyed to shaft *B* and is encircled by collar *b* of link *4*. Link *4* is connected by turning pair *C* to pin *3* of segment gear *2*. When gears *1* and *6* rotate continuously at uniform velocity, gear *5* rotates intermittently with nonuniform velocity.

2935	PLANETARY GEARING MECHANISM OF A COMPENSATOR	CxG ML

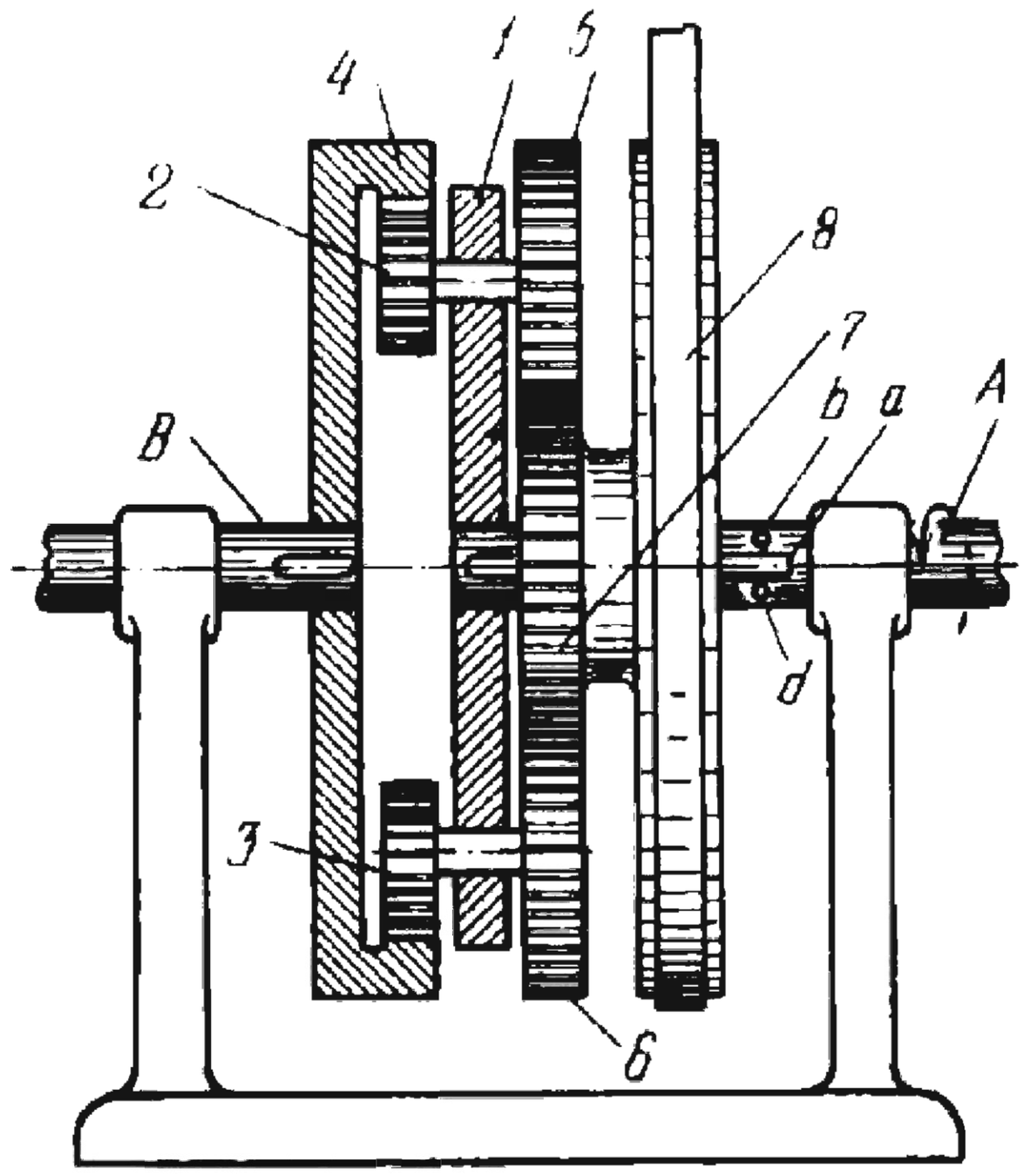

Carrier *1* is keyed to shaft *A* and is connected by turning pairs to pairs of planet gears, consisting of gears *2* and *5*, and gears *3* and *6*, each pair being rigidly attached together. Internal gear *4* is keyed to shaft *B* and meshes with planet gears *2* and *3*. The rotation of driving shaft *A* is transmitted through carrier *1* and gears *2* and *3* to driven shaft *B*, and through gears *5* and *6* to gear *7* which is freely mounted on shaft *A*. Gear *7* has lug *a* which engages either pin *b* or pin *d*, secured in shaft *A*, depending upon the direction of rotation of the shaft. When shaft *A* rotates in the direction shown by the arrow, lug *a* engages pin *d* and gear *7* rotates together with shaft *A*. At this, gears *2*, *3*, *5* and *6* rotate gear *4* and shaft *B* at an angular velocity equal to that of shaft *A*. If shaft *A* is reversed, gear *7* is braked by belt *8* and lug *a* begins to move from pin *d* to pin *b*, and gear *7* lags behind shaft *A* and carrier *1*. At this, gears *2*, *3*, *5* and *6* begin to rotate and drive gear *4* and shaft *B* which rotates in the same direction as shaft *A*. The sizes of the gears are such that shaft *B* rotates at a higher angular velocity than shaft *A*. As a result, shaft *B* overtakes shaft *A*, eliminating the backlash of a special amplifier (not shown). When lug *a* reaches pin *b*, gear *7* rotates together with shaft *A* and the speed of shaft *B* is equal to that of shaft *A*. The distance between pins *d* and *b* is adjusted to exactly compensate for the backlash of the amplifier.

2936	CAM AND GEAR MECHANISM FOR CONVERTING MOTION	CxG ML

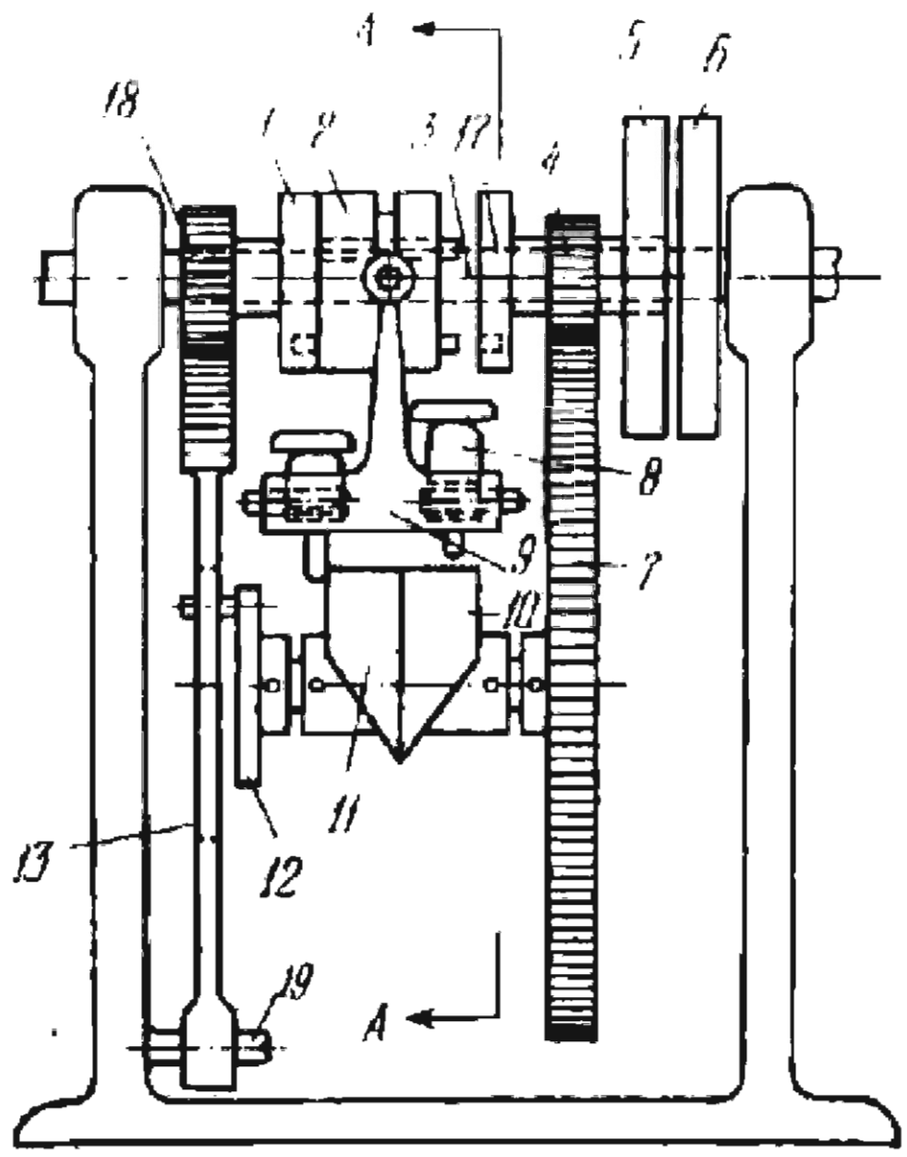

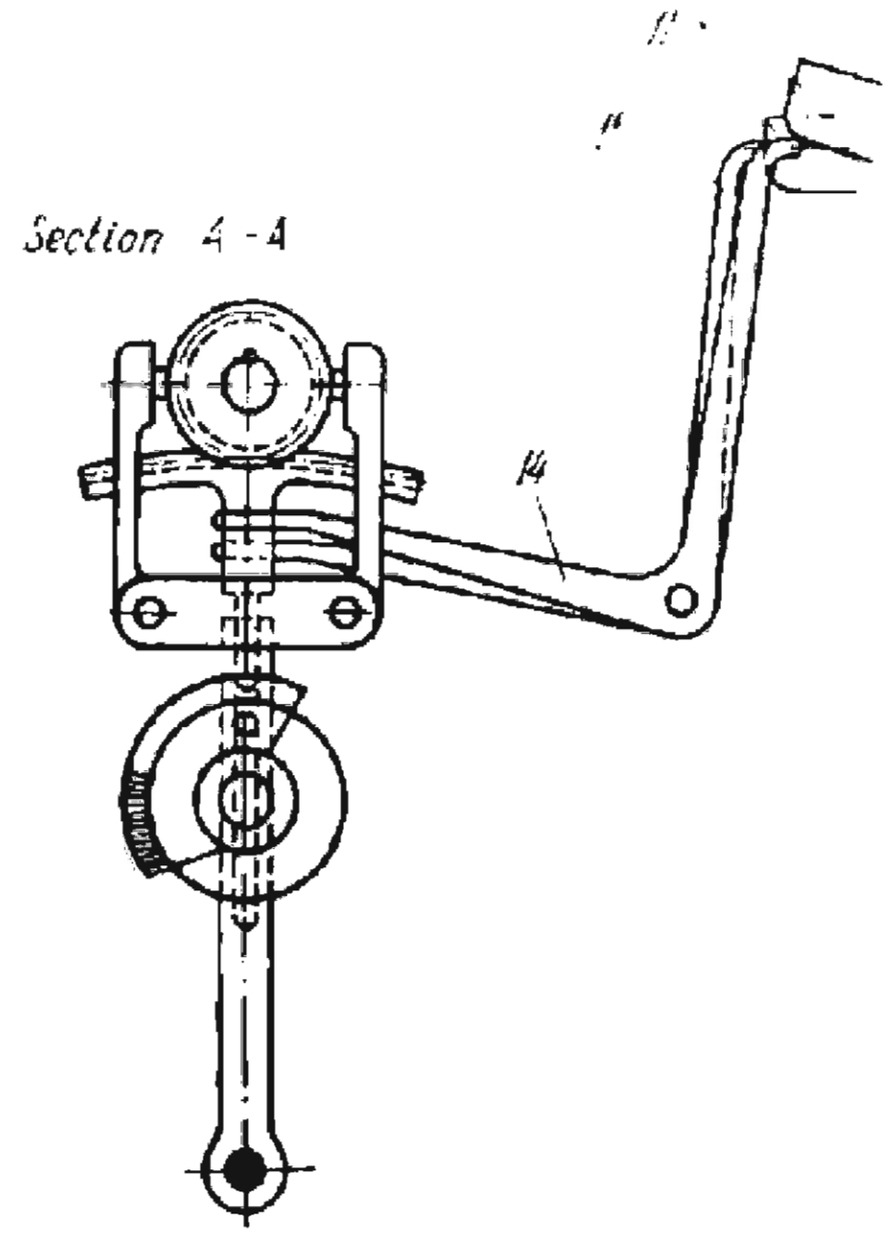

Pulley *5* is driven from an electric motor and is keyed, together with gear *4* and clutch member *17*, to a sleeve mounted freely on shaft *3*. From gear *4* rotation is transmitted to gear *7* which is keyed to a shaft together with cylindrical cams *10* and *11* and crank disk *12*. The pin of disk *12* engages the slot of slotted lever *13*, oscillating it about pin *19*. The upper end of lever *13* has a gear segment which meshes with pinion *18*, rotating the pinion alternately in each direction. Pinion *18* and clutch member *1* are keyed to a sleeve which is mounted freely on shaft *3*. Pulley *6* is keyed to shaft *3* and clutch member *2* slides along shaft *3* on a feather. Clutch *2* is shifted into engagement with either clutch member *1* or *17* by shifting yoke *9*. When clutch members *1* and *2* are engaged, pulley *6* rotates alternately in each direction; when clutch members *2* and *17* are engaged, pulley *6* rotates in the same direction as pulley *5*. Shifting yoke *9* is shifted to the right or left by cylinder cam *10* or *11* when the cam engages one of the pins *8*. Either pin *8* is pushed downward, and into contact with a cam, by bell-crank levers *14* and *15* (see Section *A-A*) which are actuated by cams *16* mounted on a camshaft (not shown).

2937	GEAR-TYPE REVERSING MECHANISM	CxG ML

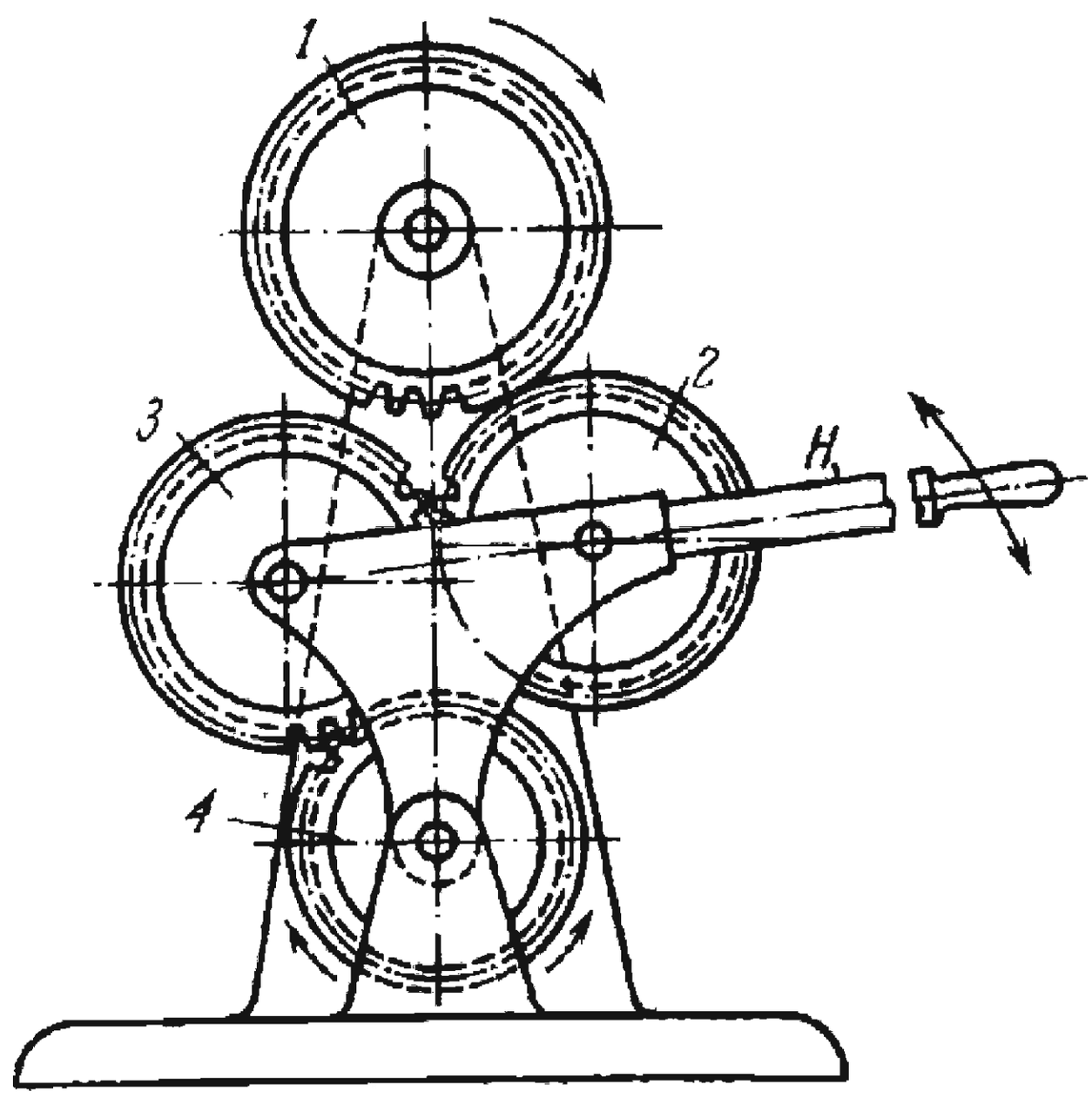

When handle *H* is turned clockwise, gear *3* is brought into engagement with gear *1* so that rotation is transmitted from gear *1* to gear *4* through gear *3*. When handle *H* is turned counterclockwise, gear *2* is brought into engagement with gear *1* so that rotation is transmitted through gears *2* and *3*. Thus, with gear *1* rotating continuously in one direction, gear *4* can be reversed.

2938	SPUR AND BEVEL GEARING MECHANISM WITH VARIABLE TRANSMISSION RATIOS	CxG ML

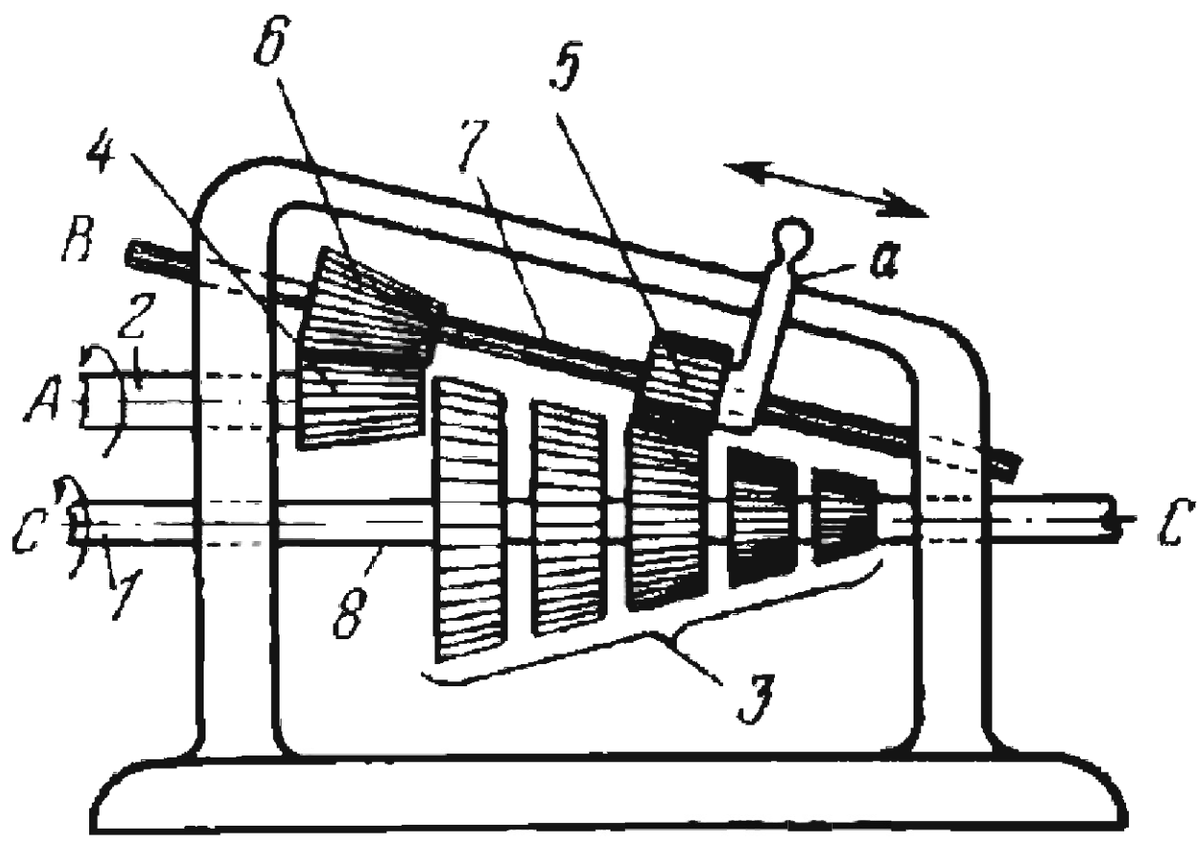

Bevel gear *4* is keyed to shaft *2*, rotates about fixed axis *A* and meshes with bevel gear *6* which is keyed to shaft *7* and rotates about fixed axis *B*. Spur gear *5* slides along a feather of shaft *7* and can be shifted into engagement with any one of bevel gears *3*, comprising a gear cone keyed to shaft *8* which rotates about fixed axis *C*. Sliding gear *5*, by means of handle *a*, into engagement with cone gears *3*, five different transmission ratios i_{21} can be obtained between shafts *2* and *1*.

2939	GEAR-TYPE SETTING MECHANISM	CxG ML

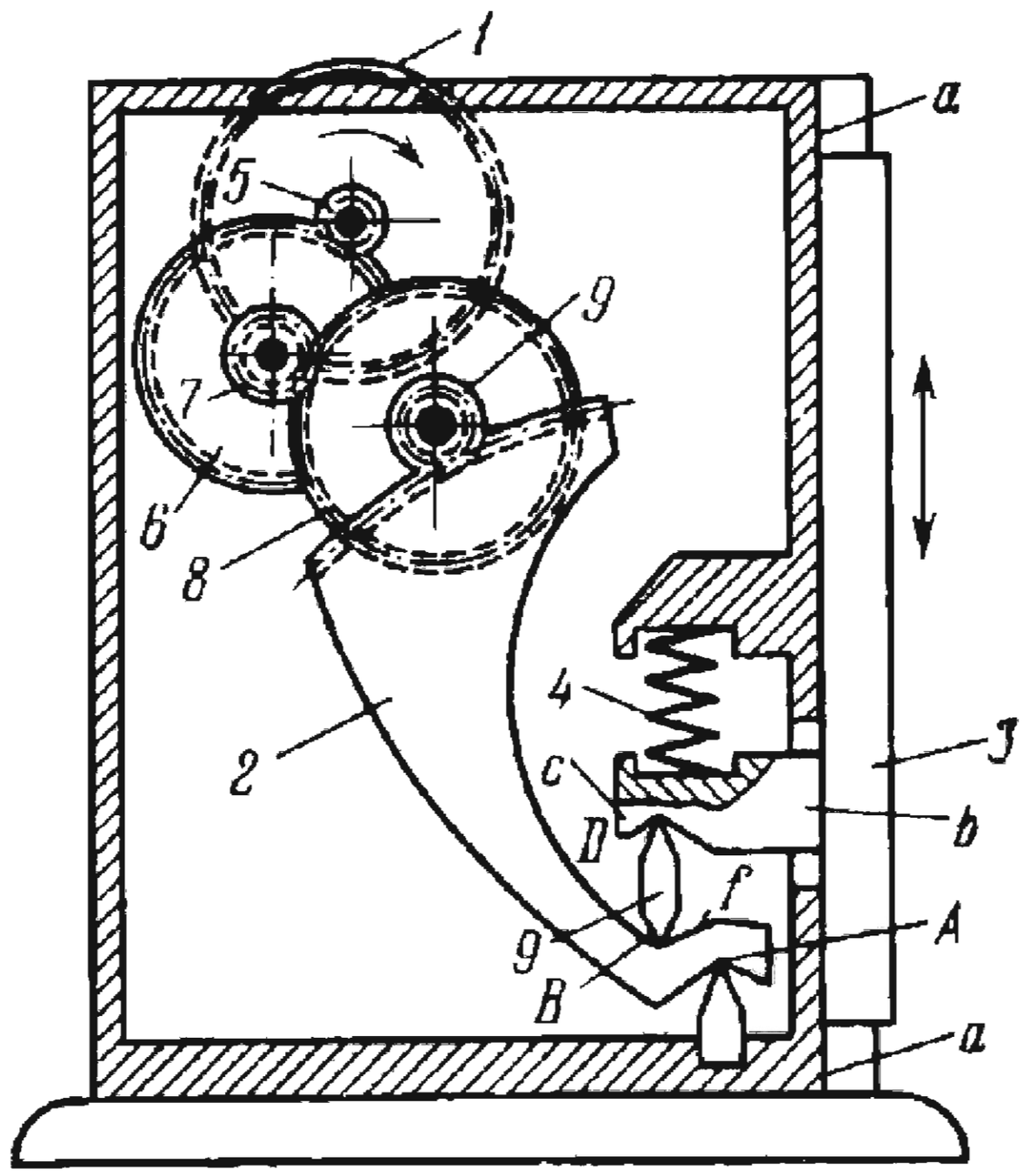

The link to be set is slide *3* which can be moved along fixed guides *a-a*. Lug *b* of slide *3* has notch *c*. Intermediate link *9* has knife edges *D* and *B* which enter notch *c* and notch *f* of link *2*. When gear *1* is turned, rotation is transmitted through intermediate gears *5*, *6*, *7*, *8* and *9* to segment gear *2* which turns about fixed knife edge *A*, setting slide *3* in the required position. Spring *4* eliminates backlash in the gearing and holds the links tightly in contact with one another.

2940	GEARING MECHANISM FOR DRIVING TWO SHAFTS INTERMITTENTLY AND ALTERNATELY	CxG ML

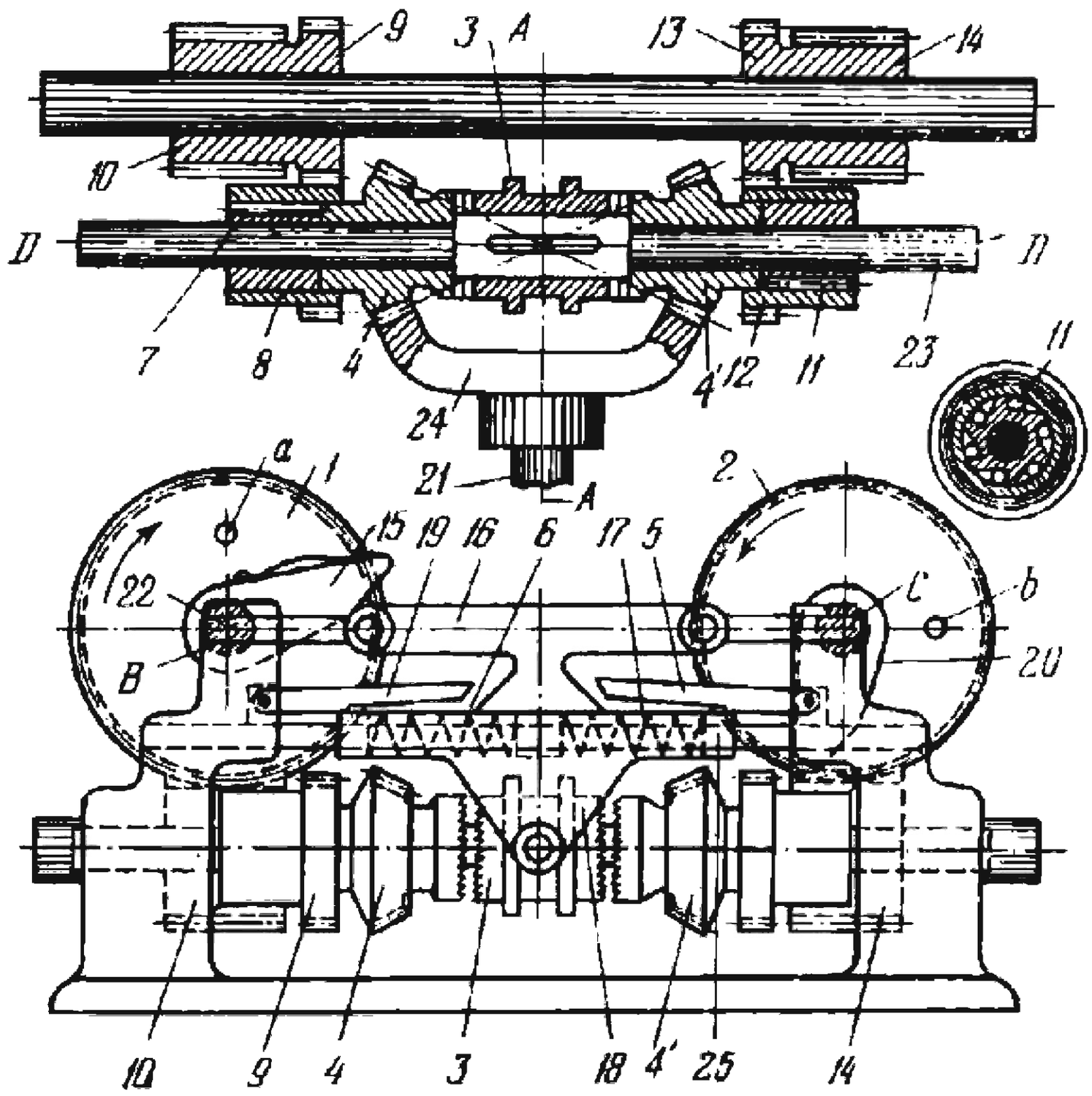

When shaft *21* rotates continuously about fixed axis *A-A*, worm wheels *1* and *2* rotate intermittently and alternately, one revolution at a time, about fixed axes *B* and *C*. Bevel gear *24* is keyed to shaft *21* and meshes with two bevel pinions *4* and *4'* which rotate freely on shaft *23* about fixed axis *D-D*. Clutch member *3* slides along a feather on shaft *23* and can be engaged to either pinion *4* or *4'* (it is shown in the neutral position). When clutch member *3* is in engagement with pinion *4* (with a step on latch *5* engaging collar *25* on shifter slide *18* to lock clutch member *3* in its left-hand engaged position), rotation is transmitted through a free-wheeling friction clutch (consisting of inner member *7*, keyed to shaft *23*, and an outer member integral with gear *8*), gear *9* and worm *10* to worm wheel *1*. Worm wheel *2* has a dwell during this engagement because the right-hand free wheeling clutch disengages for this direction of rotation of shaft *23* so that outer member, gear *12*, runs freely over inner member *11*. As worm wheel *1* rotates clockwise, pin *a* runs against swinging arm *15*, which turns freely on worm wheel shaft *22*, causing the arm to contact the roller on shifter lever *16* and push the lever to the right, compressing spring *17*. As shifter lever *16* continues to travel to the right its cam surface lifts latch *5*, releasing spring *17* and shifter slide *18* which forces clutch member *3* to the right, into engagement with bevel pinion *4'*. At this, latch *19* locks clutch member *3* in its right-hand position. Then worm wheel *1* stops, and worm wheel *2* is driven counterclockwise through inner clutch member *11*, gears *12* and *13*, and worm *14*. Worm wheel *1* dwells, and wheel *2* rotates, until pin *b* turns swinging arm *20* so that it engages the second roller of shifter lever *16*, first compressing spring *6* and then lifting latch *19* so that clutch member *3* is shifted into engagement again with gear *4*.

2941	GEARING MECHANISM FOR ONE-WAY ROTATION WITH A REVERSING DRIVE	CxG ML

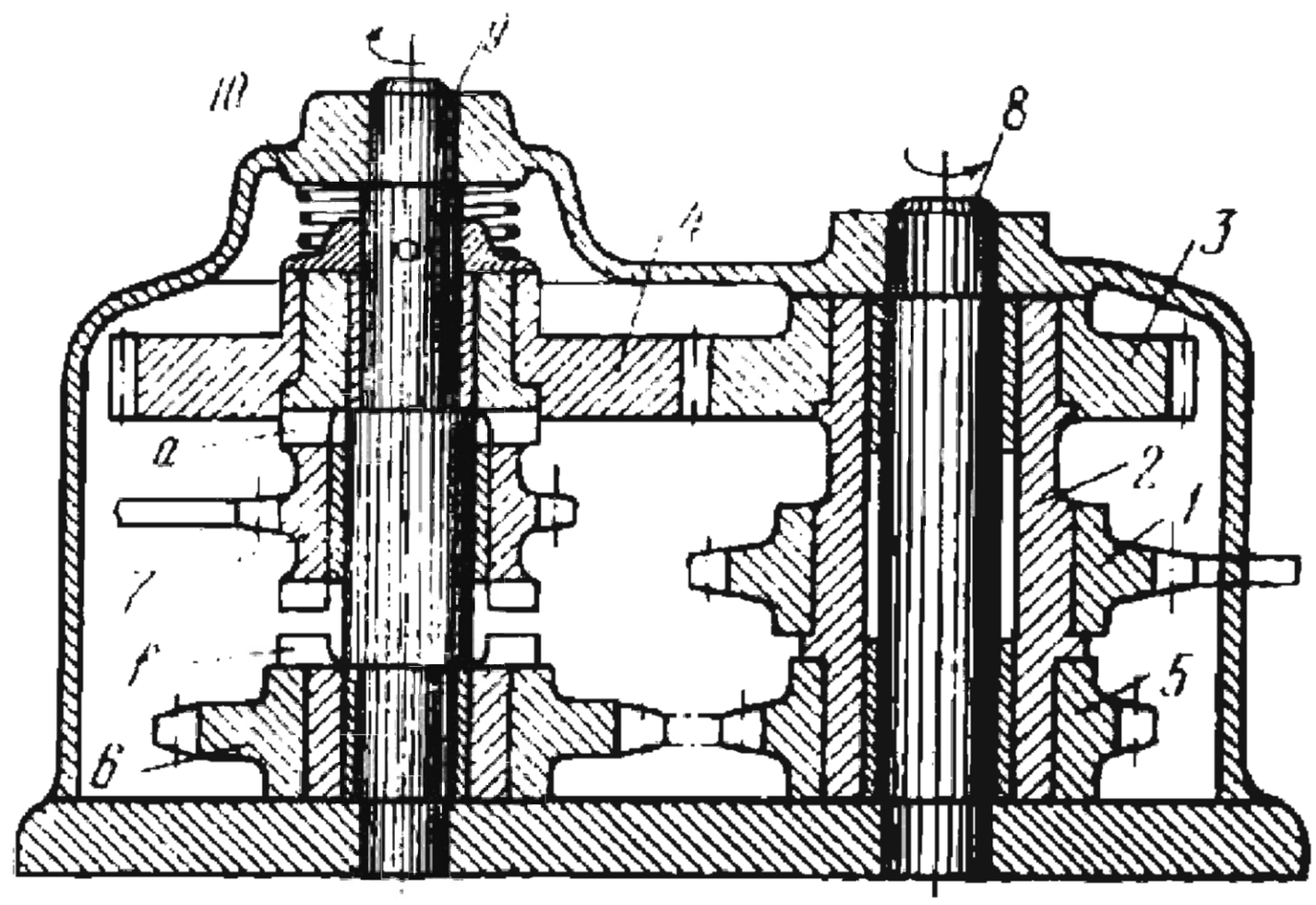

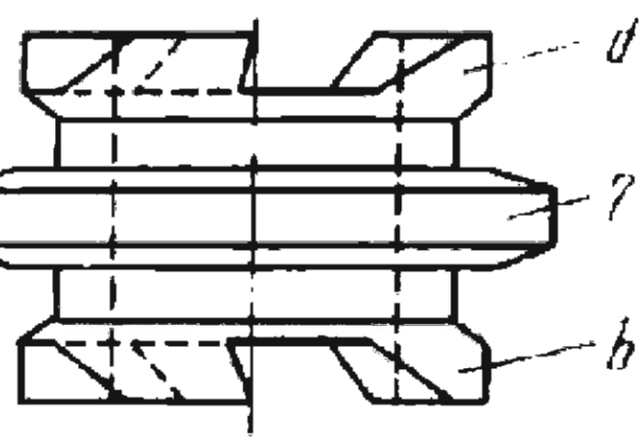

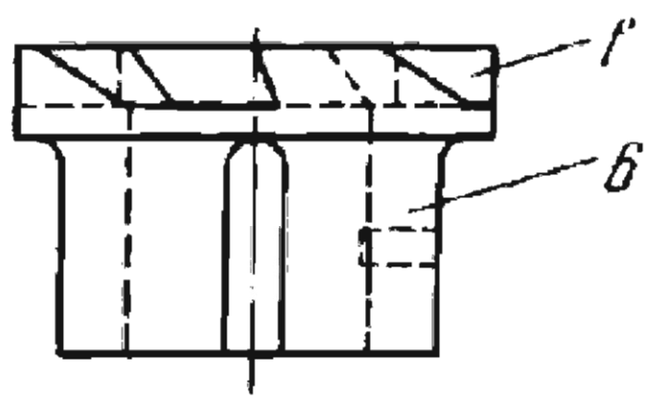

Gear *3* and chain sprockets *1* and *5* are keyed to sleeve *2* which rotates freely about shaft *8*. Sprocket *1* is driven by a reversing motor. Gear *4* and sprockets *7* and *6* all rotate freely on shaft *9*. Gear *3* meshes with gear *4* and is rotated in one direction, while sprocket *5* is connected by a chain to sprocket *6* so that this sprocket rotates in the opposite direction to gear *4*. When gear *4* is rotating in a definite direction, the clutch teeth *d* of sprocket *7* engage the clutch teeth *a* of gear *4* so that sprocket *7* rotates in the same direction as the gear. Here the flat faces of the teeth are in engagement. If the rotation of sprocket *1* is reversed, the action between the tapering surfaces of the backs of clutch teeth *a* and *d* of gear *4* and sprocket *7* shifts the sprocket axially so that clutch teeth *b* of the sprocket engage teeth *f* of sprocket *6*. Driven now by sprocket *6*, sprocket *7* continues to rotate in the same direction as before sprocket *1* was reversed. Thus sprocket *7* rotates in one direction regardless of reversals of sprocket *1*. When sprocket *7* is shifted, the tops or lands of its clutch teeth may strike the tops of the teeth on gear *4* or sprocket *6*, leading to a wedging or jamming action between gear *4* and sprocket *6*. This wedging action is immediately relieved by axial motion of gear *4*. This compresses spring *10* which returns gear *4* to its proper position when the clutch teeth engage properly.

2942	DOUBLE RACK-AND-PINION MECHANISM	CxG ML

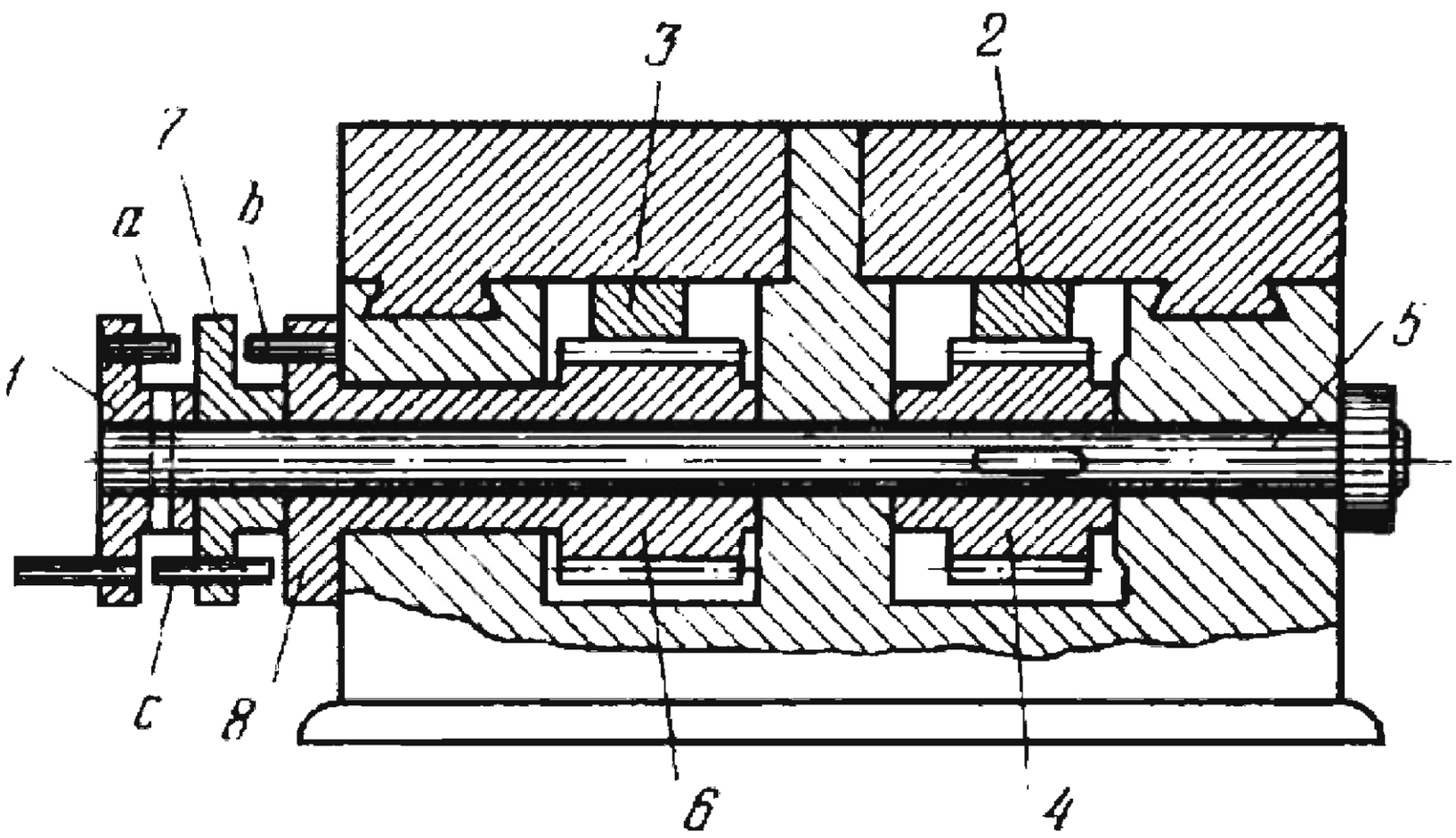

Rack *2* is driven directly from handwheel *1*, rigidly attached to shaft *5*, through pinion *4* which is keyed to the shaft. Rack *3* is driven from handwheel *1* through gear *6*, rotating freely on shaft *5* and rigidly attached to collar *8*, and the consecutive engagement of pins *a*, *c* and *b* in handwheel *1*, freely rotating disk *7* and collar *8*. Thus, at the beginning of each stroke of rack *2*, rack *3* has a dwell or delay corresponding to two revolutions of handwheel *1* minus the thickness of two pins. Only after this will pins *a*, *c* and *b* come into contact, so that gear *6* begins to rotate and rack *3* starts on its stroke. On the return stroke of rack *2*, rack *3* has a similar dwell.

2943	RACK-AND-GEAR INTERMITTENT ROTATION MECHANISM	CxG ML

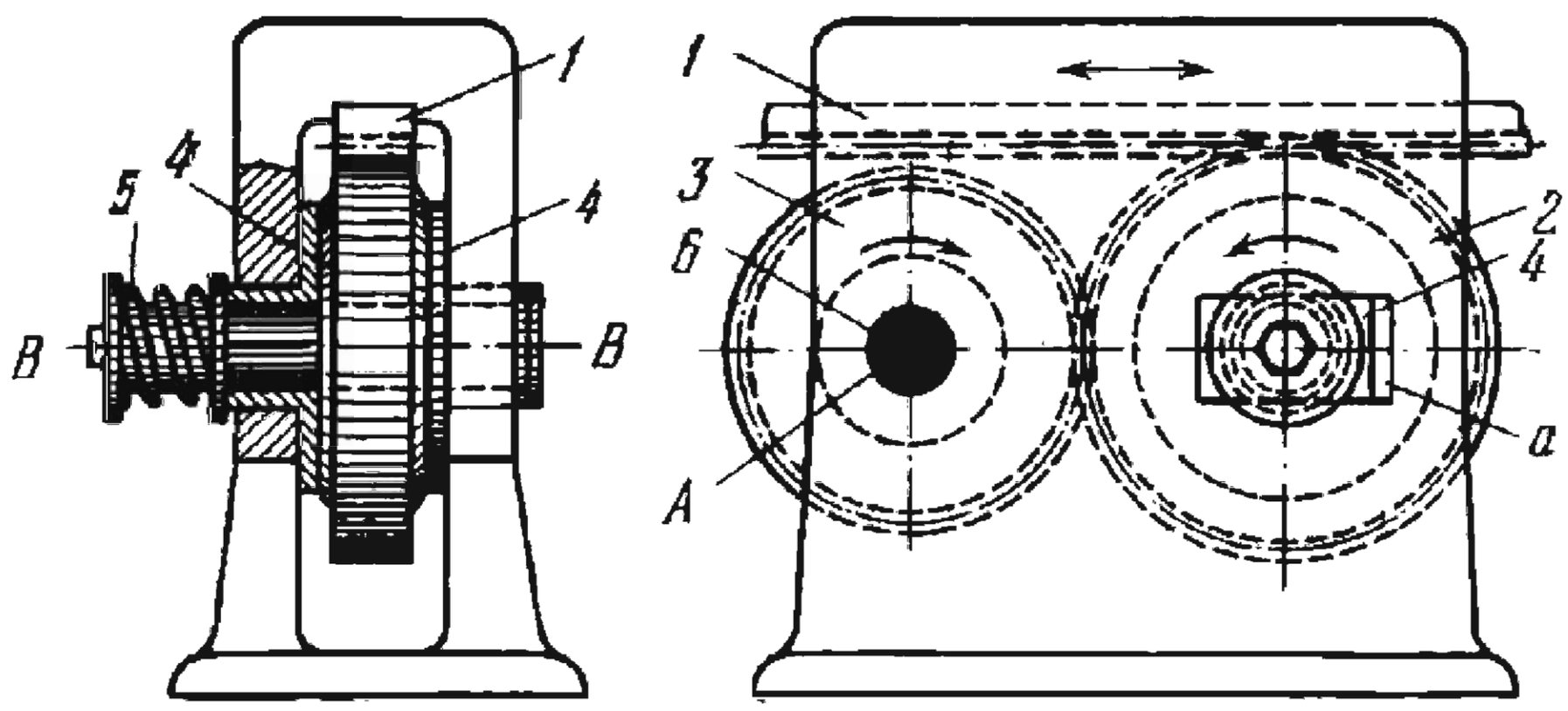

Gear *3* is keyed to driven shaft *6*, rotates about fixed axis *A* and intermittently meshes with gear *2* which rotates about axis *B-B*. Flanges *4* are held tightly against the sides of gear *2* by spring *5* and can slide with gear *2* and its shaft along fixed guide *a*. Gear *2* meshes with reciprocating rack *1*. Owing to the braking action of the flanges, gear *2* is shifted from one end of slot *a* to the other in each stroke of rack *1*. When gear *2* is at the left-hand end of slot *a* (as shown), because rack *1* is travelling toward the left, it meshes with gear *3* rotating it clockwise. When the rack begins its return stroke to the right, gear *2* is shifted to the right-hand end of slot *a* and out of engagement with gear *3*. Thus, driven shaft *6* has intermittent rotation, always in the same direction.

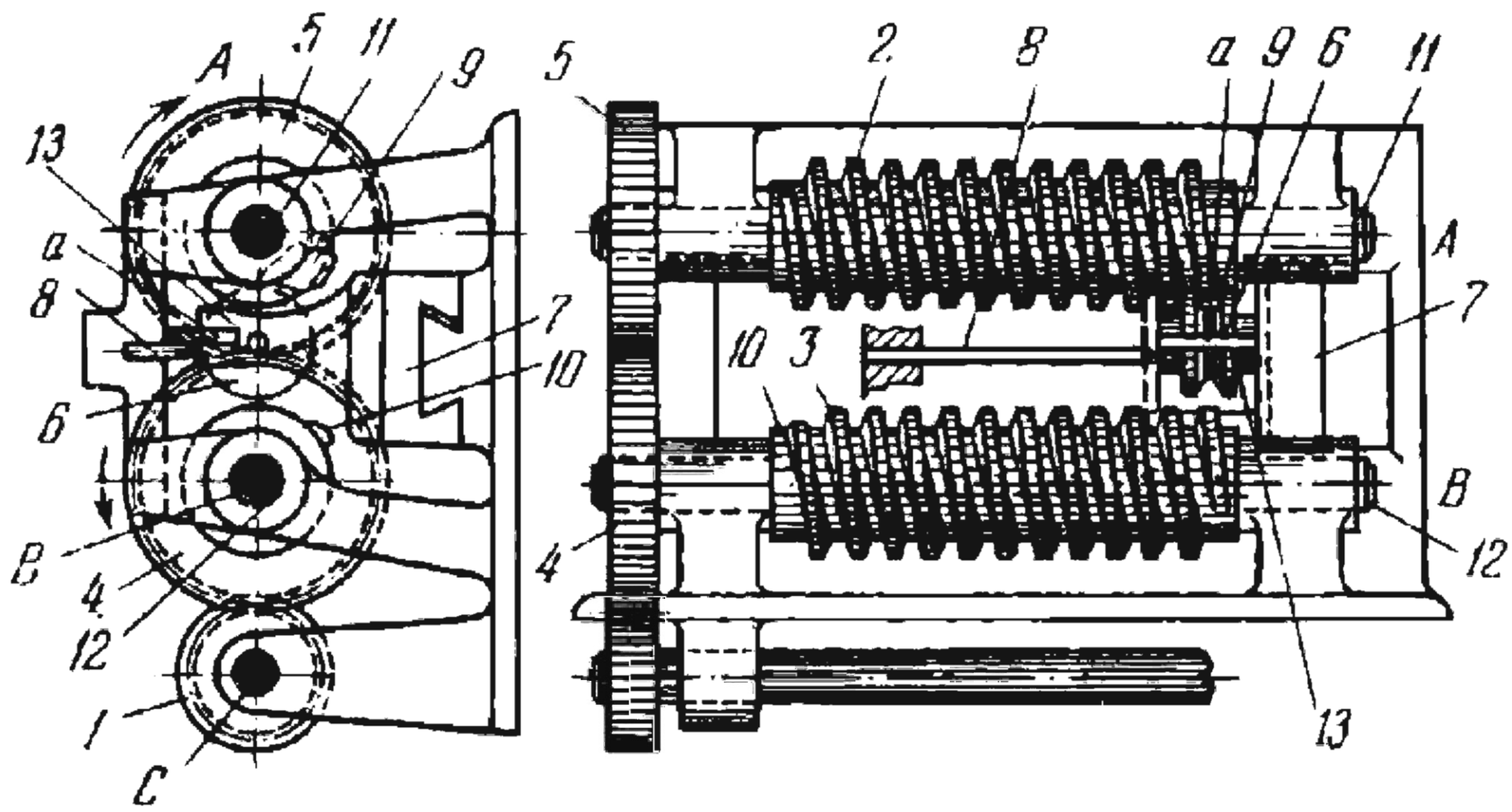

When gear *1* rotates about fixed axis *C*, right-hand screws *2* and *3*, keyed to shafts *11* and *12*, are driven in opposite directions (clockwise and counterclockwise, respectively) by gears *5* and *4* about fixed axes *A* and *B*. Follower-roll *6* is free to turn on its bearings in cross slide *13* which moves laterally in slide *7* so that roll *6* can be shifted into engagement with either screw. When roll *6* engages screw *2*, slide *7* travels to the right; when it engages screw *3*, slide *7* travels to the left. Roll *6* is held in engagement with each screw by insert *a* which slides along one or the other side of fixed bar *8*. When roll *6* reaches the end of its right-hand stroke (as shown), insert *a* on roll cross slide *13* has just passed the right end of bar *8*, and cam lug *9*, secured to the right end of screw *2*, contacts a flange of roll *6*, shifting the roll on cross slide *13* over into engagement with the thread on screw *3*. The lug holds slide *13* in this position until the left end of insert *a* passes the right-hand end of bar *8* which continues to hold roll *6* in engagement with screw *3*. A similar action occurs at the left end of the stroke of slide *7* where cam lug *10*, secured to the left end of screw *3*, shifts roll *6* into engagement with screw *2*. Thus slide *7* has a continuous reciprocating motion.

2945	DIFFERENTIAL RACK-AND-PINION ADDING MECHANISM FOR THREE ADDENDS	CxG MO

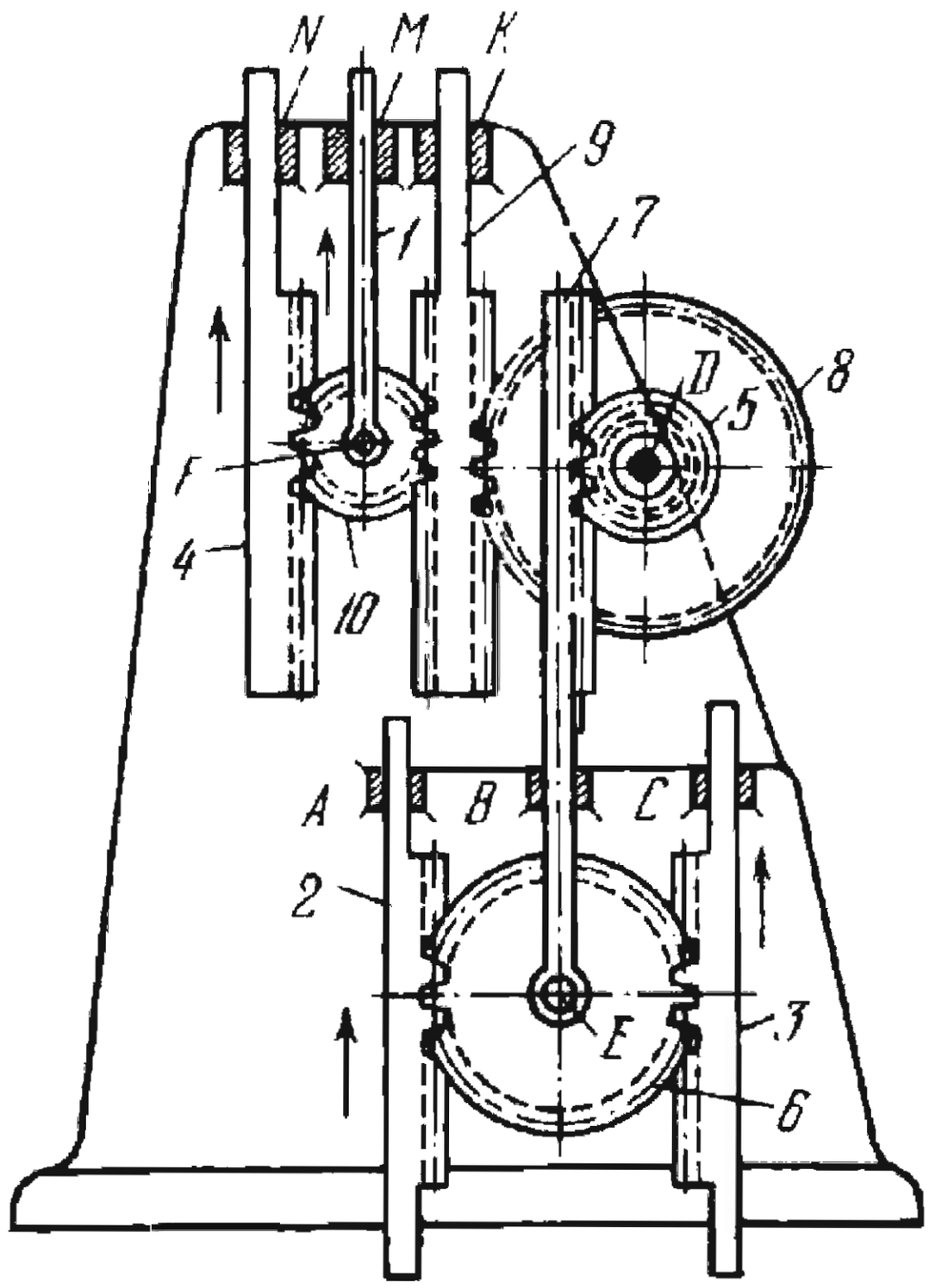

Rack *2* slides in fixed guide *A* and meshes with gear *6* which, in turn, meshes with rack *3*, sliding in fixed guide *C*. Gear *6* is connected by turning pair *E* to rack *7* which slides in fixed guide *B* and meshes with pinion *5*. Pinion *5* rotates about fixed axis *D* and is rigidly attached to gear *8* which meshes with two-sided rack *9*. Rack *9* slides in fixed guide *K* and meshes with pinion *10* which is connected by turning pair *F* to link *1*. Link *1* slides in fixed guide *M*. Pinion *10* meshes with rack *4* which slides in fixed guide *N*. The three addends are proportional to the linear displacements s_2, s_3 and s_4 of racks *2*, *3* and *4*. The linear displacement s_1 of link *1* is proportional to the half-sum of addends s_2, s_3 and s_4, which are entered by shifting racks *2*, *3* and *4*. Thus

$$s_1 = \frac{s_2 + s_3 + s_4}{2}$$

since the numbers of teeth of gears *5* and *8* are related by the equation $z_8 = 2z_5$. The required sum is determined by reading off the displacement of link *1* on a special scale (not shown).

2946	DIFFERENTIAL BEVEL GEARING ADDING MECHANISM FOR TWO ADDENDS	CxG MO

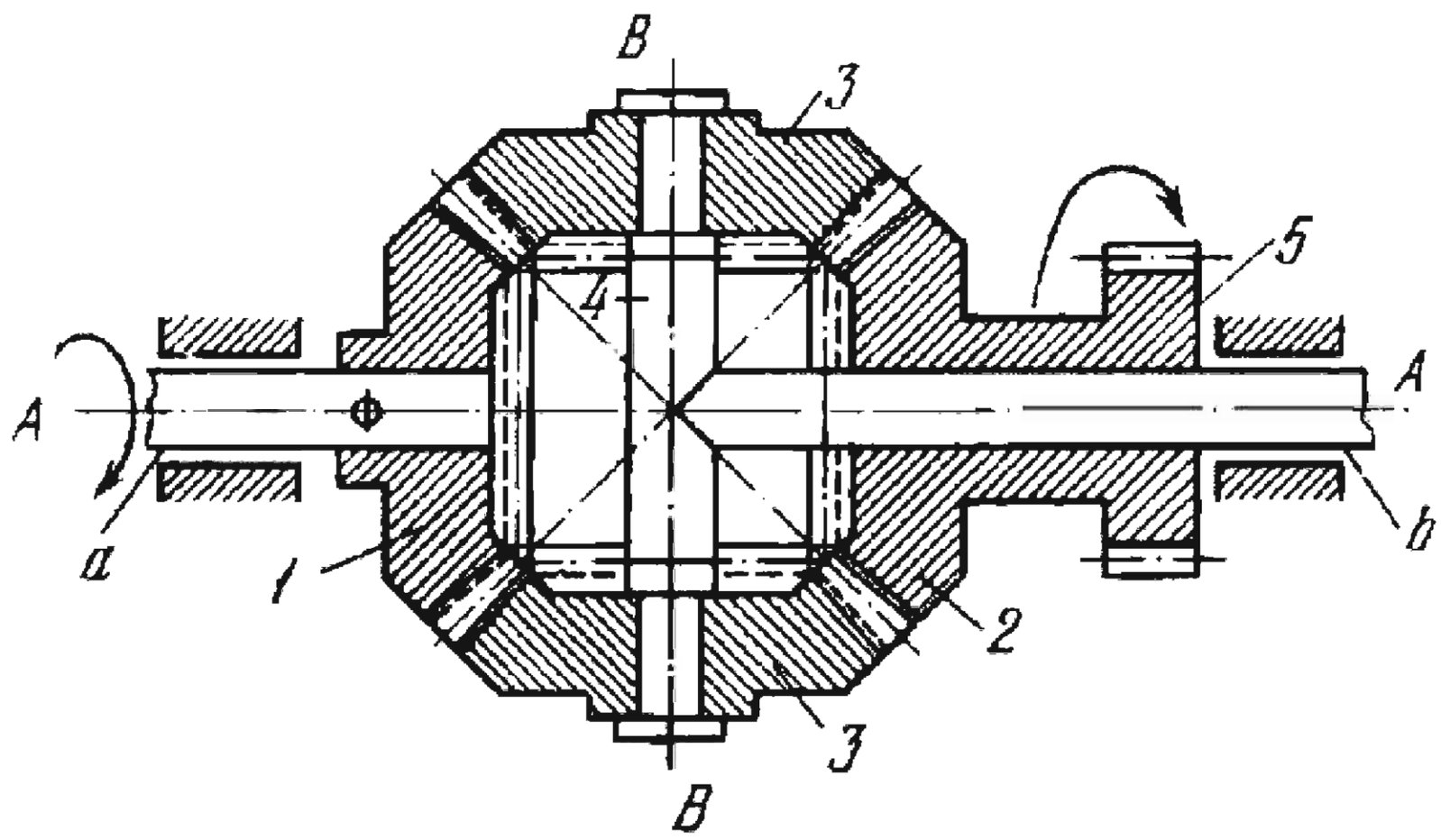

Bevel gear *1* is keyed to shaft *a*, rotates about fixed axis *A-A* and meshes with two bevel planet gears *3* of equal size which are connected by turning pairs *B* to carrier *4*. Shaft *b* of carrier *4* rotates about axis *A-A*. Planet gears *3* mesh with bevel gear *2* which rotates freely about shaft *b* and is rigidly attached to gear *5*. Gears *1* and *2* have the same number of teeth. The two addends are proportional to the angles of rotation φ_1 and φ_2 of gear *1* and gear *2*. Angle φ_4 of rotation of carrier *4* (and shaft *b*) is proportional to the half-sum of addends φ_1 and φ_2, which are entered by turning shaft *a* and gear *5*. Thus

$$\varphi_4 = \frac{\varphi_1 + \varphi_2}{2}.$$

The required sum of the two addends is read off on a special registering device (not shown).

2947	DIFFERENTIAL RACK-AND-PINION ADDING MECHANISM FOR TWO ADDENDS	CxG MO

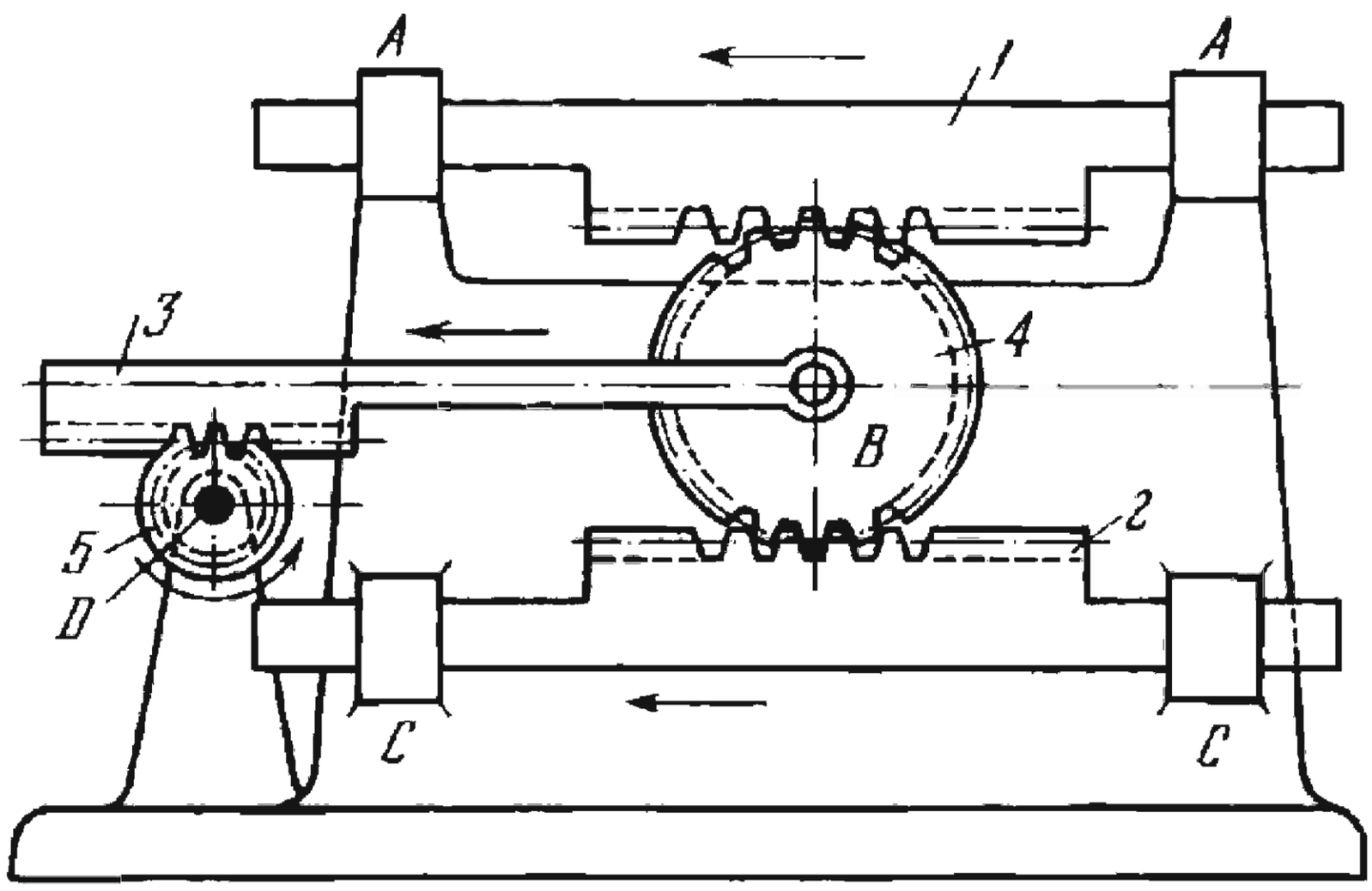

Gear rack *1* slides in fixed guides *A-A* and meshes with pinion *4* which, in turn, meshes with rack *2*. Rack *2* slides in fixed guides *C-C*. Rack *3* is connected by turning pair *B* to pinion *4* and meshes with pinion *5* which rotates about fixed axis *D*. The two addends are proportional to the linear displacements s_1 and s_2 of racks *1* and *2*. The linear displacement s_3 of rack *3* is proportional to the half-sum of addends s_1 and s_2, entered by shifting racks *1* and *2*. Thus

$$s_3 = \frac{s_1 + s_2}{2}.$$

The required sum is read off as the angle φ_5 of rotation of pinion *5* which is

$$\varphi_5 = \frac{s_3}{R} = \frac{1}{2R}(s_1 + s_2)$$

where R is the pitch radius of pinion *5*.

2948	RACK-AND-PINION MULTIPLIER MECHANISM FOR QUADRUPLING SLIDE TRAVEL	CxG MO

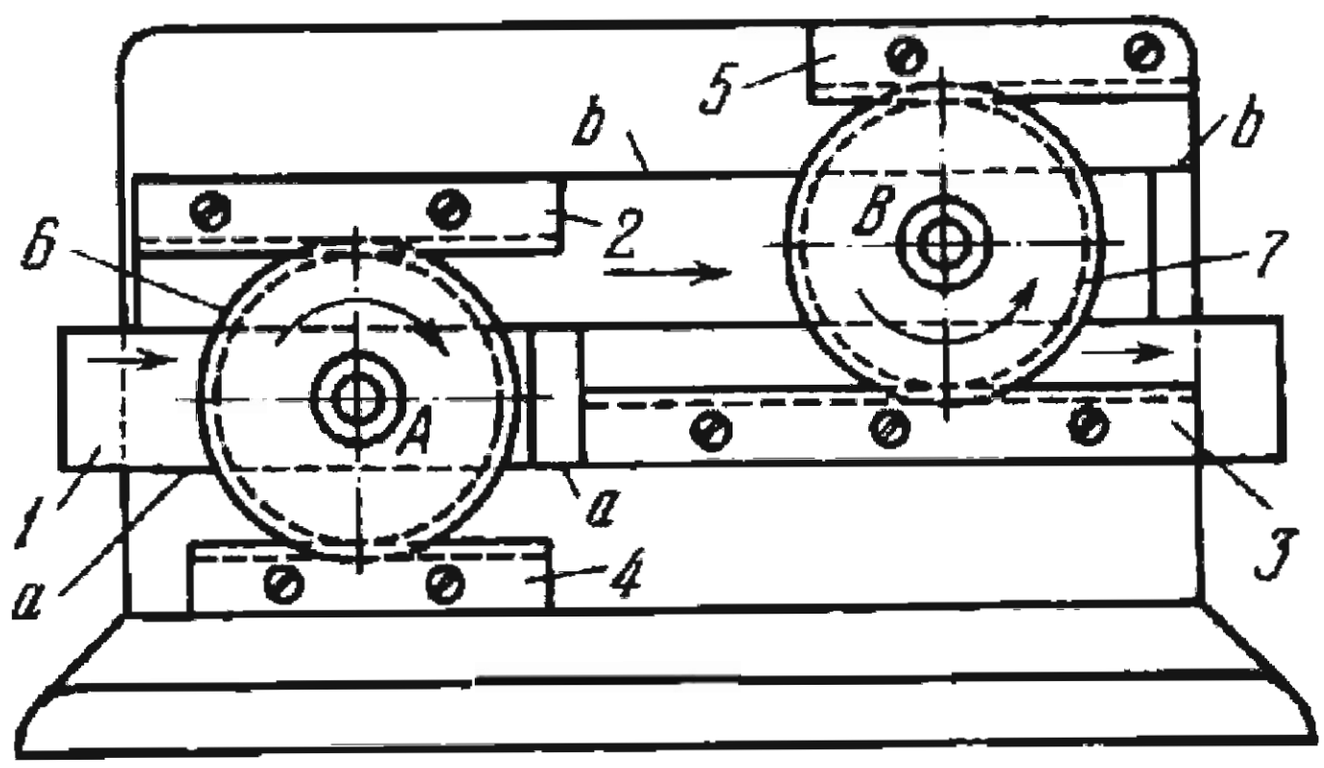

Link *1* slides along fixed guides *a-a* and is connected by turning pair *A* to pinion *6* which rolls along fixed rack *4*. Gear *6* also meshes with rack *2* which slides along fixed guides *b-b* and is connected by turning pair *B* to pinion *7*. Pinions *6* and *7* have the same pitch diameters. Pinion *7* rolls along fixed rack *5* and also meshes with rack *3* which slides along guides *a-a*. The displacement of rack *2* equals $s_2 = 2s_1$, and that of rack *3* equals $s_3 = 2s_2 = 4s_1$, where s_1 is the displacement of rack *1*.

2949	RACK-AND-PINION ADDING MECHANISM WITH A RACK-TYPE ZEROING DEVICE	CxG MO

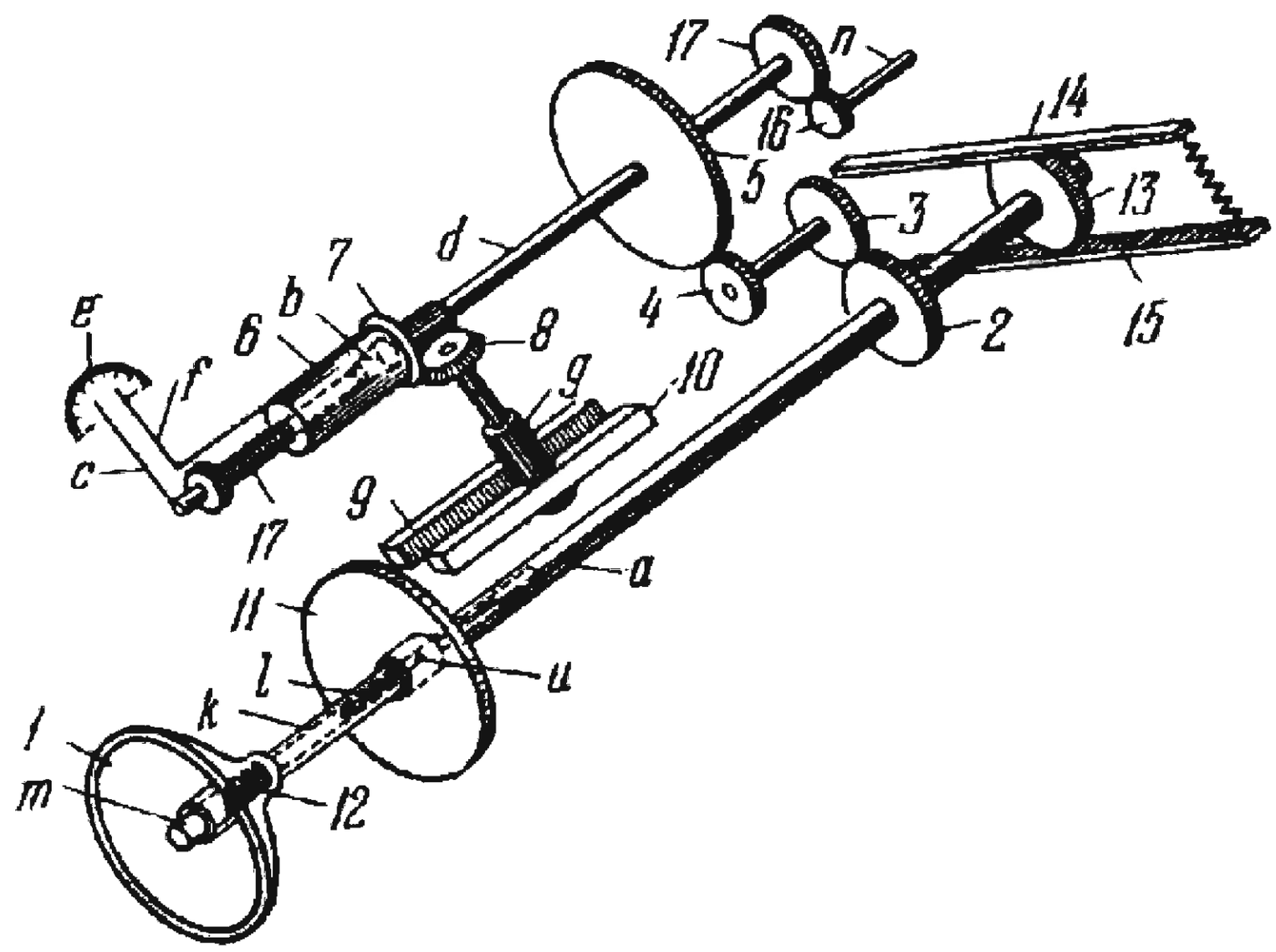

Addends are entered by turning handwheel *1* which is keyed to shaft *a* whose rotation is transmitted by gears *2*, *3*, *4* and *5* to shaft *d* with hand *c*. The amount of the addend is indicated on scale *e*. Rotation of shaft *d* is transmitted by cone *b* to friction bushing *6* which carries hand *f*. Hand *f* turns through the same angle as hand *c*. At the same time, the rotation of bushing *6* is transmitted through bevel gears *7* and *8* to pinion *g* which displaces racks *9* and *10* in opposite directions. As it travels to the left, rack *9* shifts disk *11* which is connected by pin *u* to rod *k* in the hollow part of shaft *a*. Thus, as disk *11* slides along shaft *a* within the limits allowed by slot *l*, it shifts rod *k*, overcoming the resistance of spring *12*. After entering one of the addends, button *m* of rod *k* is pushed in. This shifts rod *k* and disk *11* to the right, pushing rack *9* to the right so that rack *10* moves to the left. This motion continues until disk *11* contacts the ends of both racks after which further motion is impossible. In this position of racks *9* and *10*, and disk *11*, hand *f* is returned to zero while hand *c* indicates the previous reading. The subsequent addends are entered in the same way. Thus, after entering a number of addends, shaft *d* has been turned through an angle proportional to the sum of the addends. This sum, indicated on scale *e* by hand *c*, can be transmitted to other mechanisms by gears *17* and *16*, and shaft *n*. A locking device, consisting of gear *13* and racks *14* and *15*, serves to index the position of handwheel *1*, preventing unintentional rotation, and to apply a torque to shaft *d* which exceeds the torque produced between friction bushing *6* and shaft *d*. This is necessary to prevent the rotation of shaft *d* while hand *f* is being zeroed. A spring holds bevel gears *7* and *8* in engagement.

2950	GEARING MECHANISM FOR SOLVING A SYSTEM OF ALGEBRAIC EQUATIONS	CxG MO

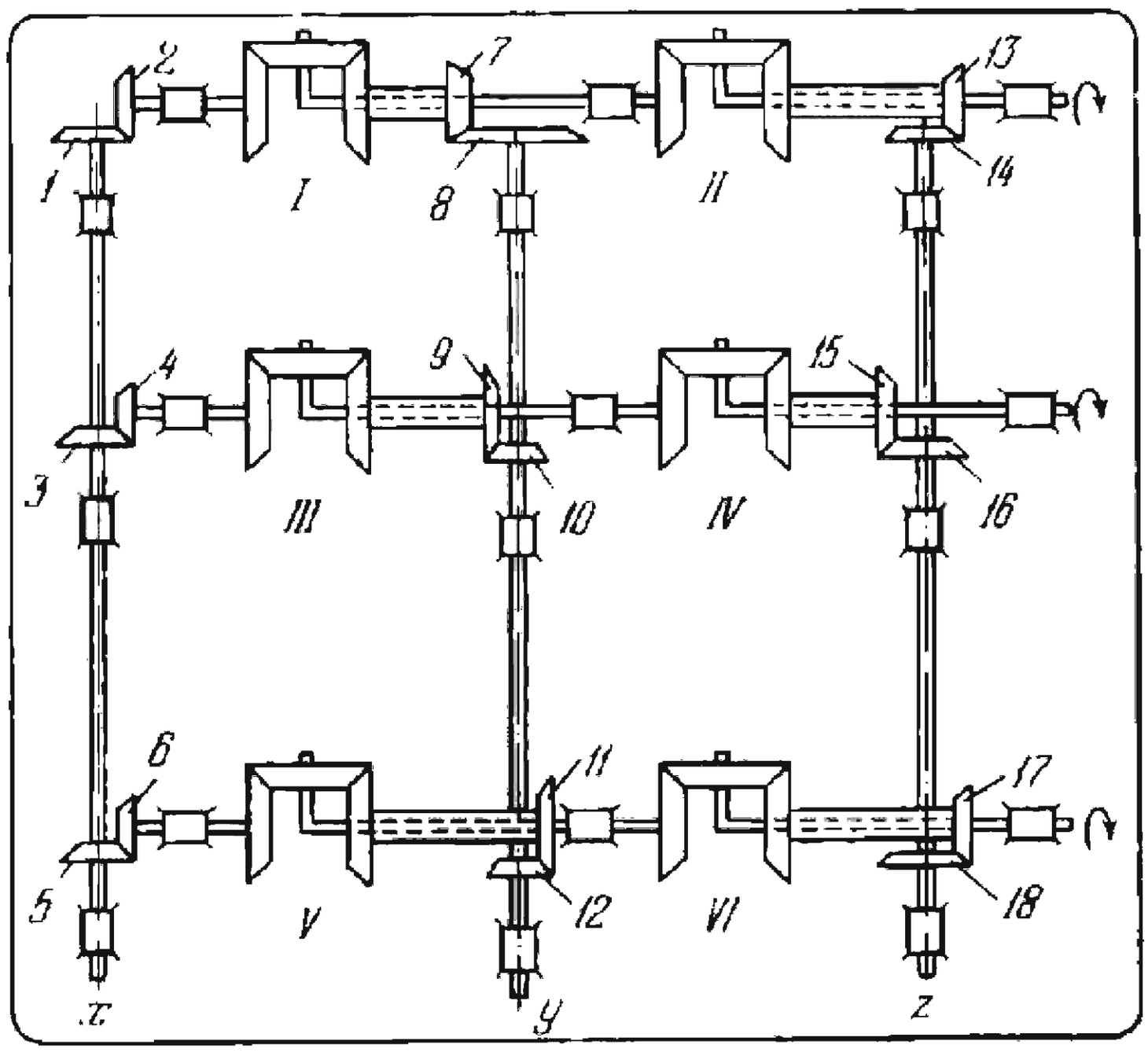

The mechanism can solve a system of three equations with three unknowns:

$$x + a_1y + b_1z = c_1$$
$$x + a_2y + b_2z = c_2$$
$$x + a_3y + b_3z = c_3$$

where a, b and c are given constants. The bevel gear pairs *1* and *2*, *3* and *4*, and *5* and *6* have a transmission ratio equal to unity. The transmission ratios of bevel gear pairs *7* and *8*, *9* and *10*, and *11* and *12* are

$$i_{7,8} = a_1, \quad i_{9,10} = a_2 \quad \text{and} \quad i_{11,12} = a_3.$$

The transmission ratios of bevel gear pairs *13* and *14*, *15* and *16*, and *17* and *18* are

$$i_{13,14} = 0.5b_1, \quad i_{15,16} = 0.5b_2 \quad \text{and} \quad i_{17,18} = 0.5b_3.$$

Owing to the properties of a bevel gear differential, the carrier of differential *II* turns an amount equal to one-fourth of the left side of the first equation, the carrier of differential *IV* an amount equal to one-fourth of the left side of the second equation and the carrier of differential *VI* an amount equal to one-fourth of the left side of the third equation. The angles of rotation of shafts x, y and z are proportional to the values of the unknowns.

2951	PLANETARY GEARING MECHANISM OF A HOISTING PULLEY	CxG MH

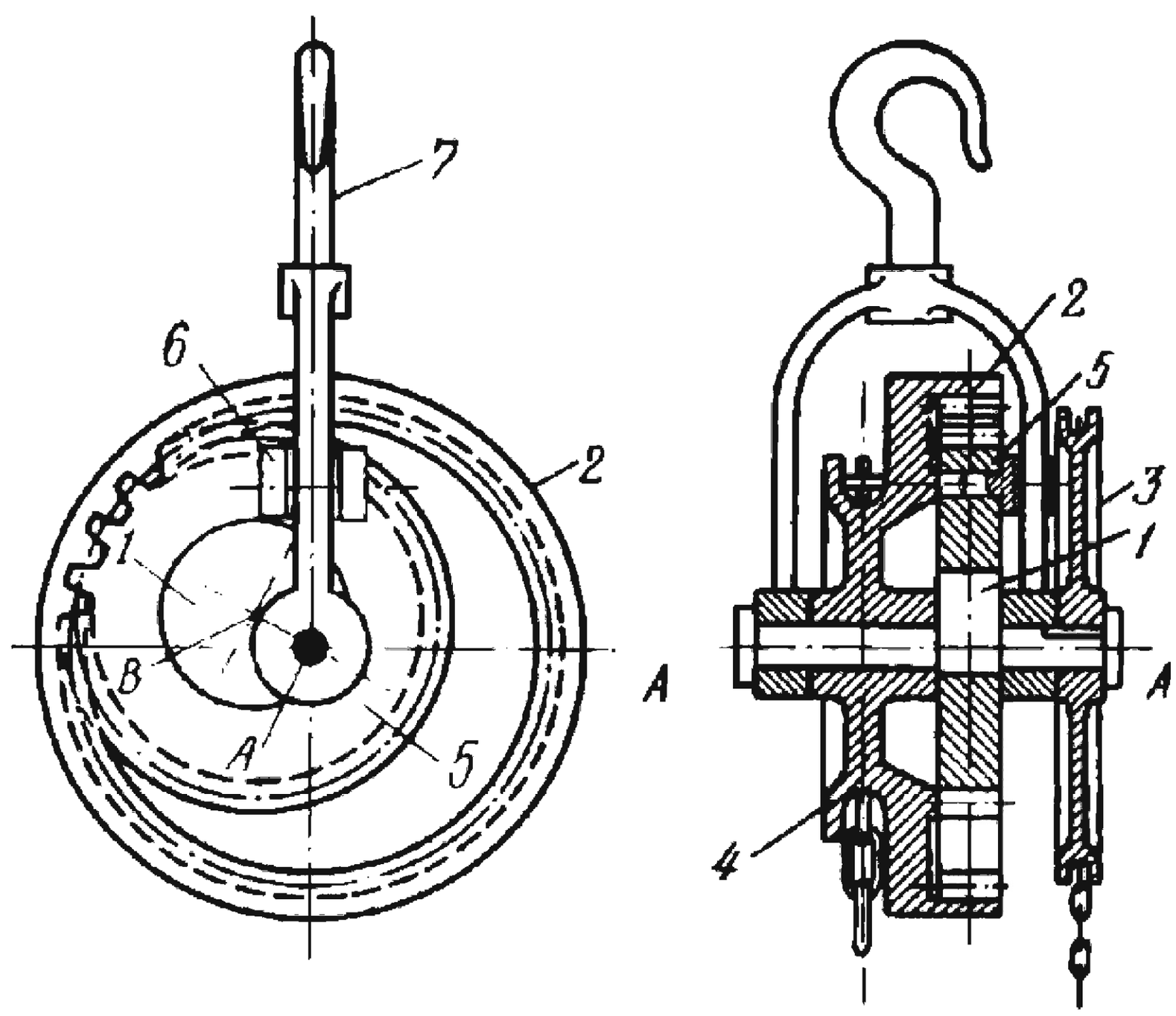

Carrier *1* rotates about fixed axis *A* and is connected by turning pair *B* to gear *5* which meshes with internal gear *2*. Guide *6* is connected by a turning pair to gear *5* and slides on member *7*. Chain sheave *3*, the driving member over which the hand chain runs, is keyed to the carrier shaft. Hoisting chain sheave *4*, the driven member, is rigidly attached to (or integral with) internal gear *2*. The load being hoisted applies a constant torque to sheave *4* which is overcome by the torque applied to hand chain sheave *3*. The load is hoisted with a large mechanical advantage.

2952	PLANETARY GEARING MECHANISM OF A PULLEY BLOCK	CxG MH

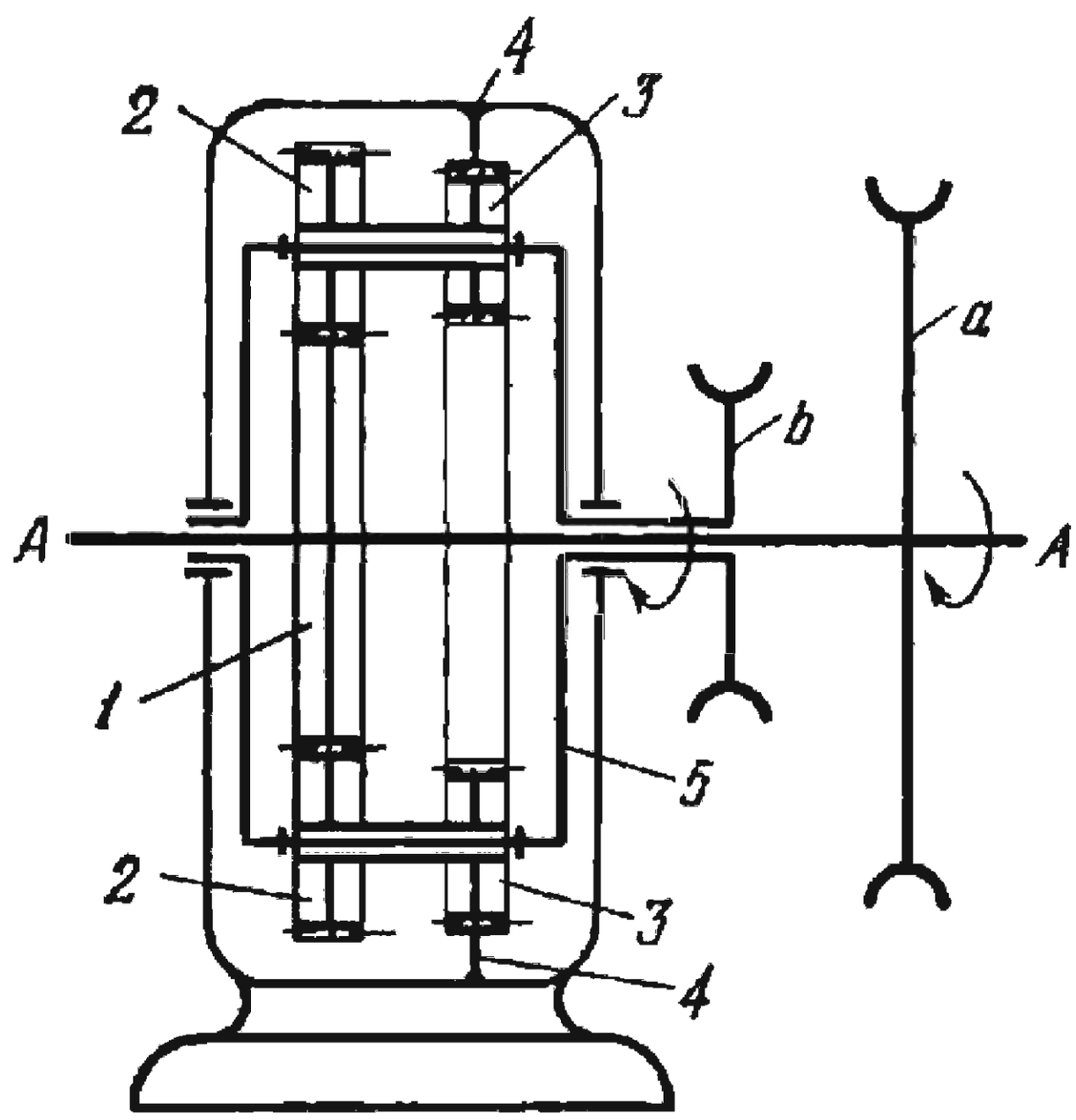

Gear *1* and chain sheave *a* are keyed to shaft *A*. Gear *1* meshes with planet gears *2* which are rigidly attached to planet gears *3*. The planet gears are connected by turning pairs to carrier *5* which is rigidly attached to chain sheave *b*. Planet gears *3* mesh with fixed internal gear *4*. The speeds n_1 and n_5 of gear *1* and carrier *5* (in rpm) are related by the equation

$$n_5 = n_1 \frac{z_1 z_3}{z_1 z_3 + z_2 z_4}$$

where z_1, z_2, z_3 and z_4 are the numbers of teeth of gears *1*, *2*, *3* and *4*. Thus driven sheave *b* rotates in the same direction as driving sheave *a*, over which the hand chain runs, only at a lower speed, and hoists the load with a large mechanical advantage.

2953	PLANETARY GEARING MECHANISM OF AN ELECTRIC HOIST	CxG MH

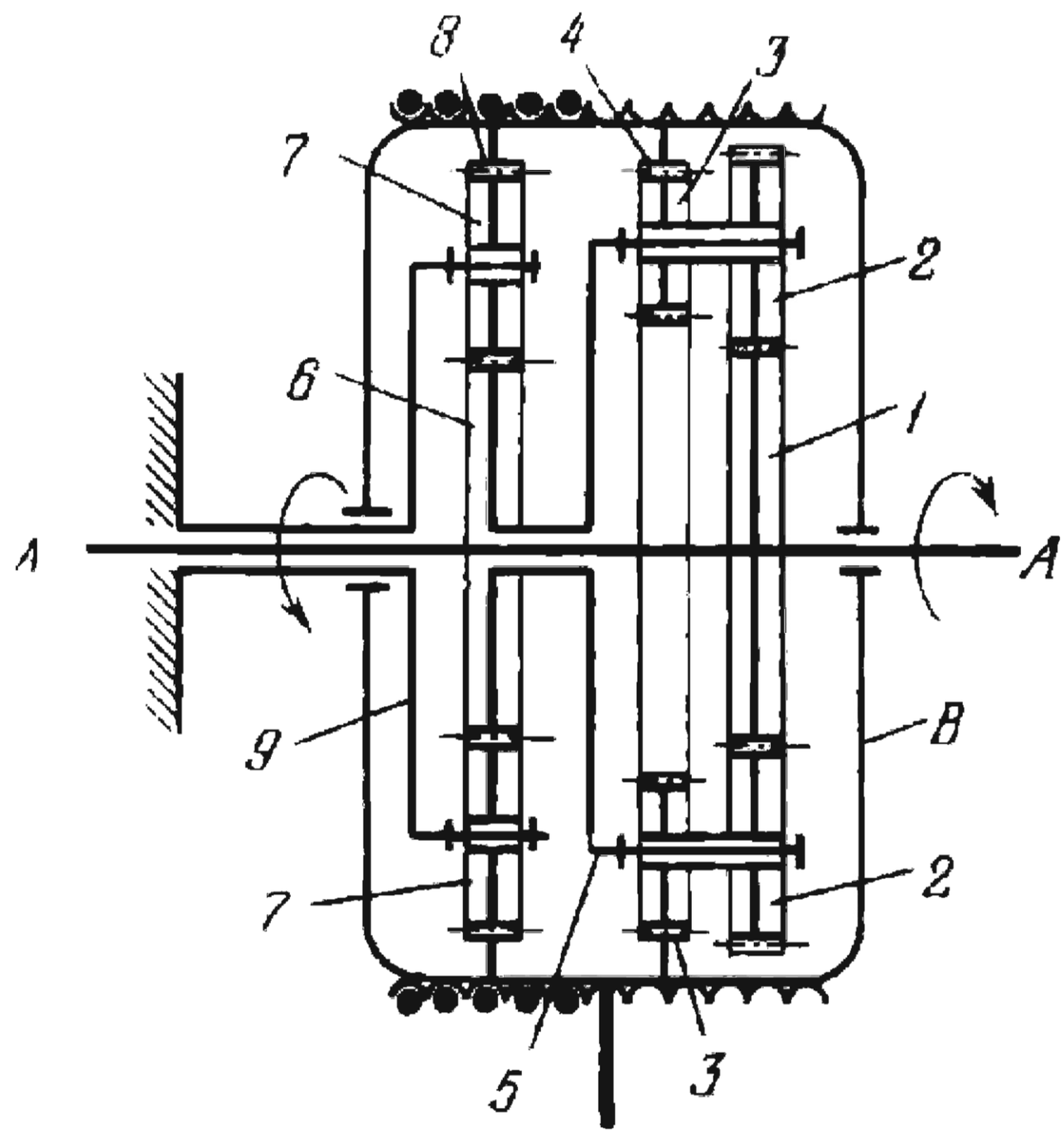

Drum *B* of the electric hoist is driven from shaft *A* to which gear *1* is keyed. Gear *1* meshes with planet gears *2* which are rigidly attached to planet gears *3*. Gears *3* mesh with internal gear *4* of drum *B*. Planet gears *2* and *3* are connected by turning pairs to carrier *5* which is rigidly attached to gear *6*. Gear *6* meshes with gears *7* which rotate about the studs of fixed member *9* and mesh with internal gear *8*. Gear *8* is also rigidly attached to drum *B*. The speeds n_1 and n_8 of shaft *A* and drum *B* (in rpm) are related by the equation

$$n_8 = -n_1 \frac{z_1 z_3 z_6}{z_2 z_4 z_6 + z_2 z_4 z_8 + z_1 z_3 z_8}$$

where z_1, z_2, z_3, z_4, z_6 and z_8 are the numbers of teeth of gears *1*, *2*, *3*, *4*, *6* and *8*. Thus, drum *B* and shaft *A* rotate in opposite directions, with the drum running at a lower speed so that it hoists the load with a large mechanical advantage.

2954	DIFFERENTIAL GEARING MECHANISM OF A TWO-DRUM ELECTRIC HOIST	CxG MH

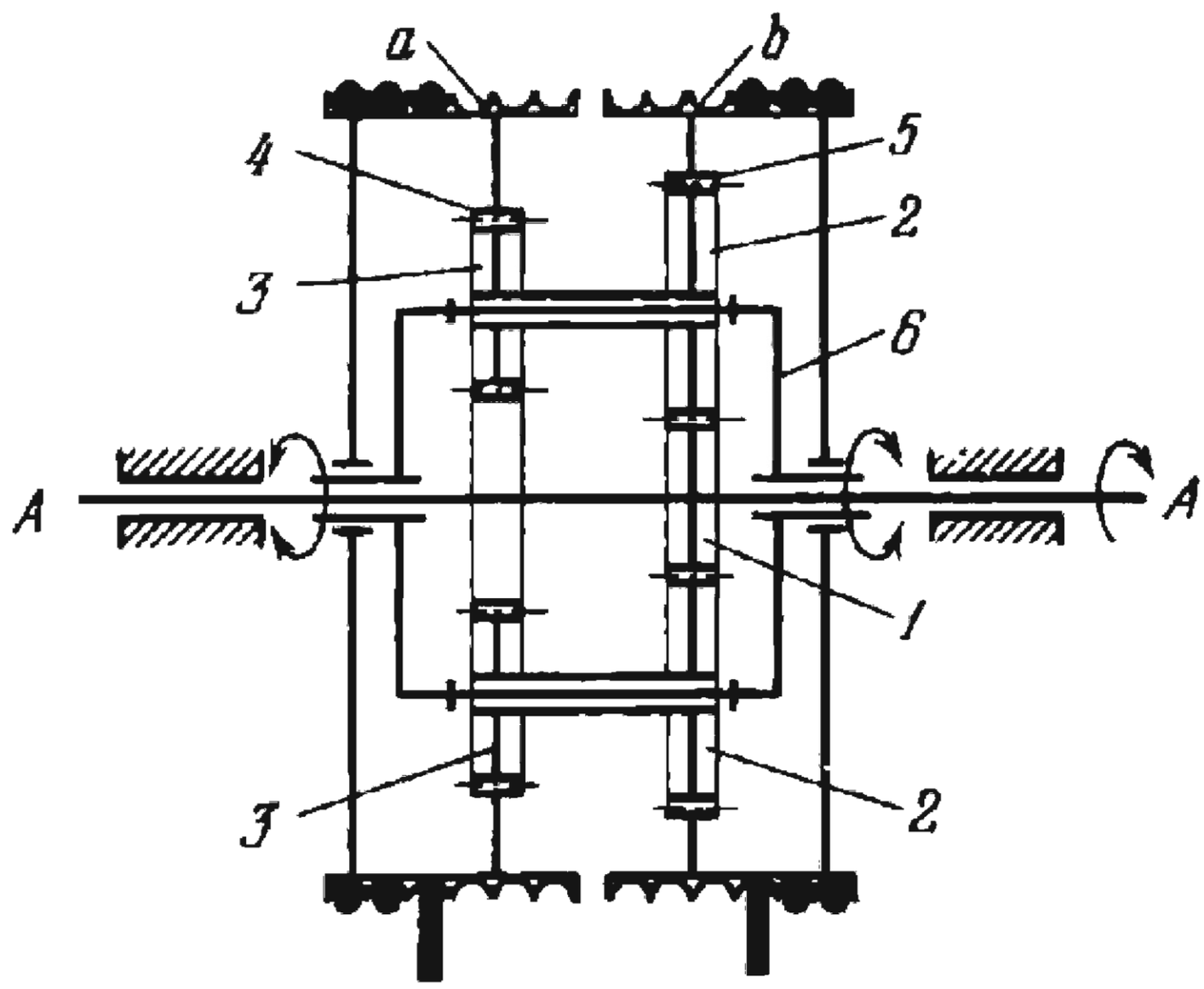

Gear *1* is keyed to the driving shaft, rotates about fixed axis *A* and meshes with planet gears *2* which, in turn, mesh with internal gear *5*, rigidly attached to hoisting drum *b*. Planet gears *3* are rigidly attached to gears *2* and mesh with internal gear *4*, rigidly attached to hoisting drum *a*. Planet gears *2* and *3* are connected by turning pairs to carrier *6* which rotates freely about axis *A*. The speeds n_1, n_5 and n_4 of gear *1*, and drums *b* and *a* (in rpm) are related by the equation

$$n_1 = n_5 \frac{z_5}{z_1} \frac{z_1 z_3 - z_2 z_4}{z_3 z_5 - z_2 z_4} + n_4 \frac{z_4}{z_1} \frac{z_2 z_5 - z_1 z_4}{z_3 z_5 - z_2 z_4}$$

where z_1, z_2, z_3, z_4 and z_5 are the numbers of teeth of gears *1*, *2*, *3*, *4* and *5*. The mechanism permits various modes of operation in hoisting. If drum *b* is braked, a load can be hoisted by drum *a* and vice versa. If one of the drums is rotated by the action of a descending load, the other drum can hoist a load, etc.

2955	CLOSED-SYSTEM DIFFERENTIAL GEARING MECHANISM OF AN ELECTRIC PULLEY BLOCK	CxG MH

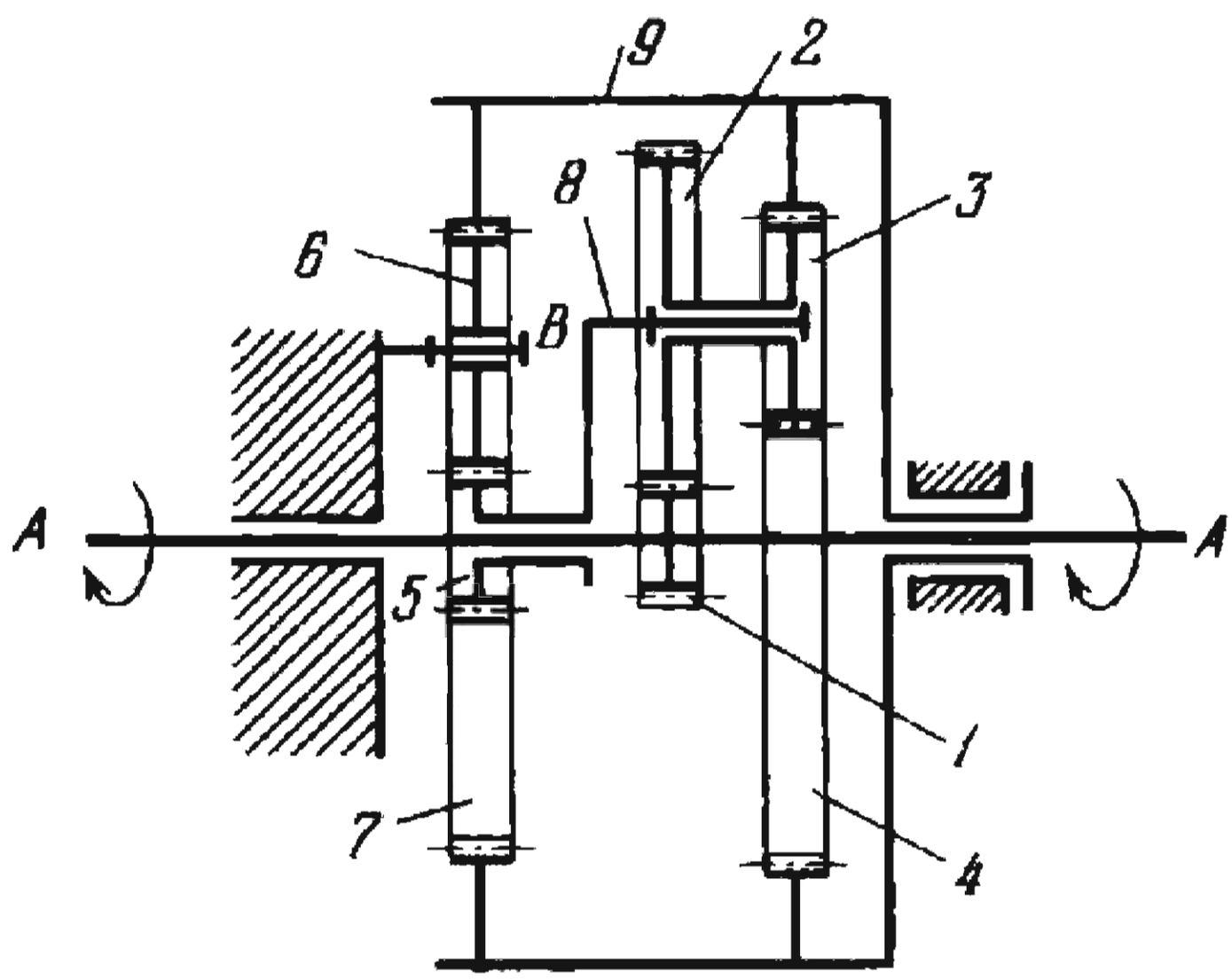

Gear *1* is keyed to the driving shaft, rotates about fixed axis *A* and meshes with planet gear *2* which is rigidly attached to planet gear *3*. Gear *3* meshes with internal gear *4* which is rigidly attached to drum *9* of the pulley block. Drum *9* rotates about axis *A*. Internal gear *7* is rigidly attached to drum *9* and meshes with gear *6* which rotates about fixed axis *B*. Gear *6* meshes with gear *5* which is rigidly attached to carrier *8*. Carrier *8* is connected by a turning pair to planet gears *2* and *3*. The speeds n_1 and n_9 of gear *1* and drum *9* (in rpm) are related by the equation

$$n_9 = n_1 \frac{z_1 z_3 z_5}{z_2 z_4 z_7 - z_2 z_4 z_5 + z_1 z_3 z_7}$$

where z_1, z_2, z_3, z_4, z_5 and z_7 are the numbers of teeth of gears *1*, *2*, *3*, *4*, *5* and *7*.

2956	PLANETARY ECCENTRIC-CARRIER GEARING MECHANISM OF A PULLEY BLOCK	CxG MH

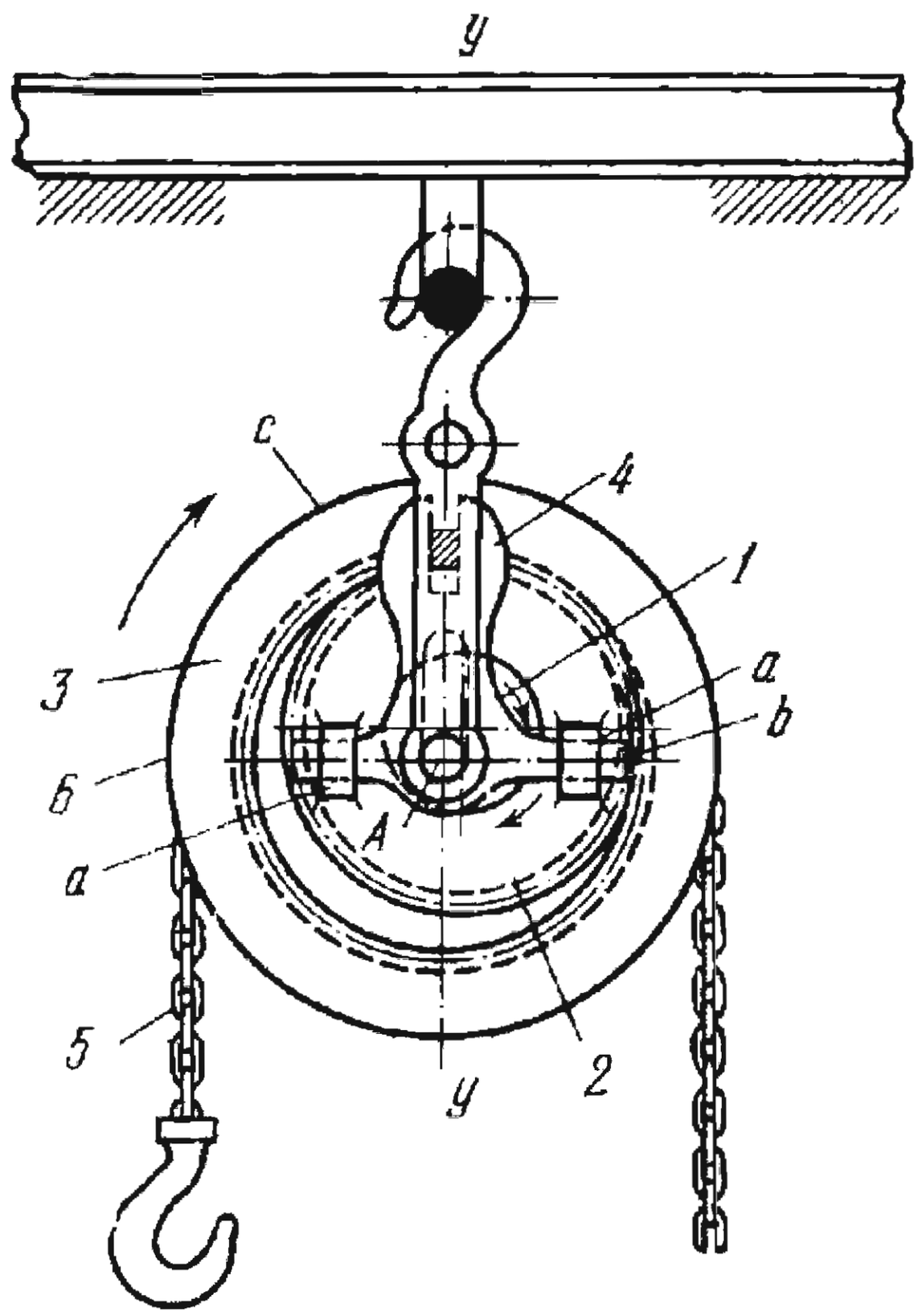

The carrier is designed as round eccentric *1* which rotates about axis *A* of crosspiece *4*. Crosspiece *4* can slide vertically along axis *y-y* and has a collar encircling eccentric *1* and two pins *b* which slide horizontally in guides *a-a* of gear *2*. Gear *2* is connected by a turning pair to eccentric *1* and meshes with internal gear *3* which rotates about axis *A* and is rigidly attached to (or integral with) chain sheave *6*. Hoisting chain *5* runs over sheave *6*. The speeds n_1 and n_3 of carrier *1* and gear *3* (in rpm) are related by the equation

$$n_3 = n_1 \frac{z_3 - z_2}{z_3}$$

where z_2 and z_3 are the numbers of teeth of gears *2* and *3*. When eccentric *1* rotates, gear *2* has a circular translational motion, gear *3* and sheave *6* rotate at a much lower speed than eccentric *1*, and chain *5* hoists the required load with a large mechanical advantage.

2957	PLANETARY GEARING MECHANISM OF A PULLEY BLOCK	CxG MH

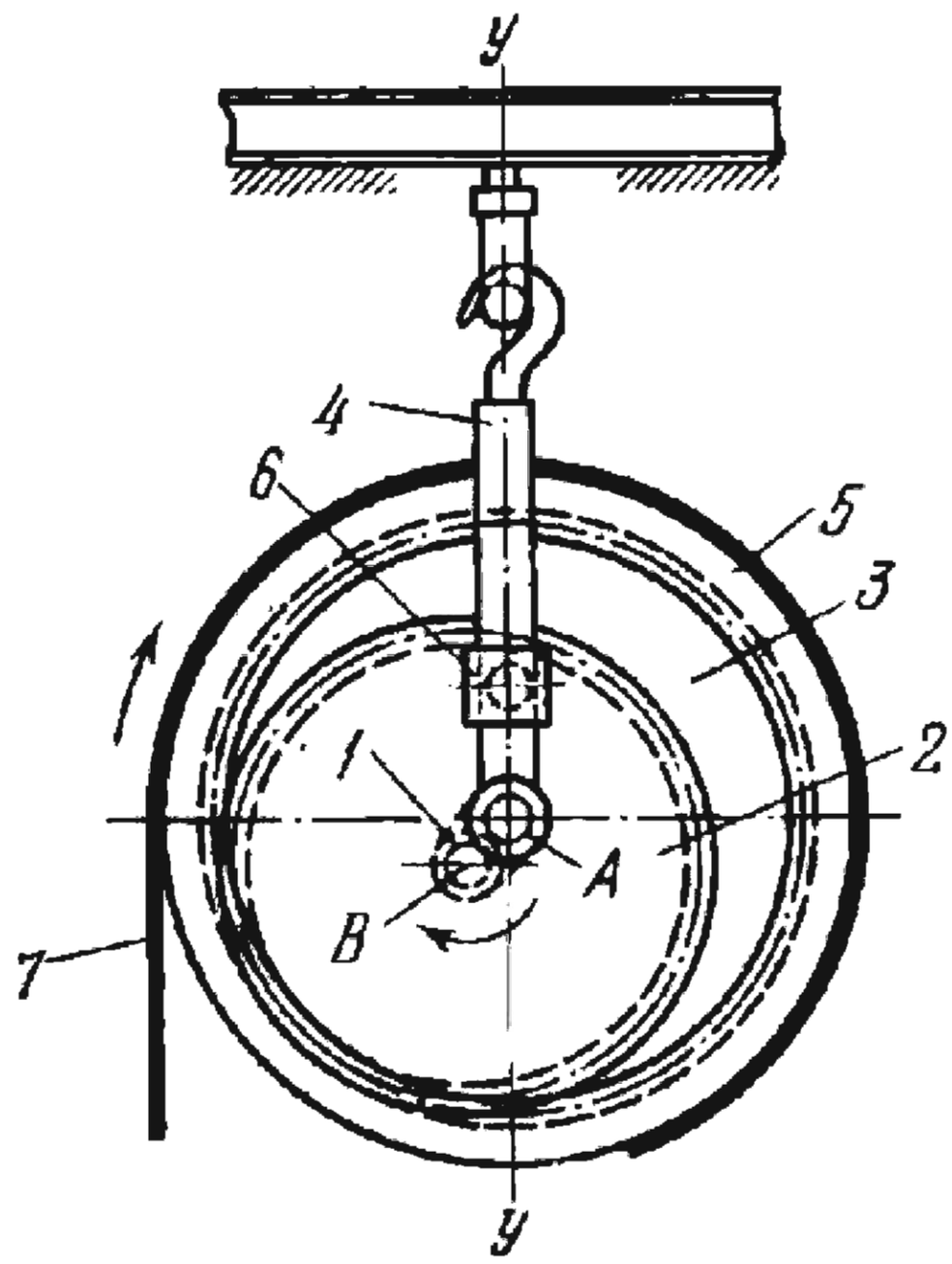

Carrier *1* rotates about axis *A* of link *4* and is connected by turning pair *B* to gear *2*. Guide *6* is connected by a turning pair to gear *2* and slides on link *4* along axis *y-y*. Gear *2* meshes with internal gear *3* which rotates about axis *A* and is rigidly attached to rope drum *5*. The speeds n_1 and n_3 of carrier *1* and gear *3* (in rpm) are related by the equation

$$n_3 = n_1 \frac{z_3 - z_2}{z_3}$$

where z_2 and z_3 are the numbers of teeth of gears *2* and *3*. When carrier *1* rotates, gear *2* has a circular translational motion, and gear *3* and drum *5* rotate at a much lower speed than carrier *1*, winding up rope *7* to hoist the required load with a large mechanical advantage.

2958	PLANETARY GEARING MECHANISM OF A CHAIN HOIST	CxG MH

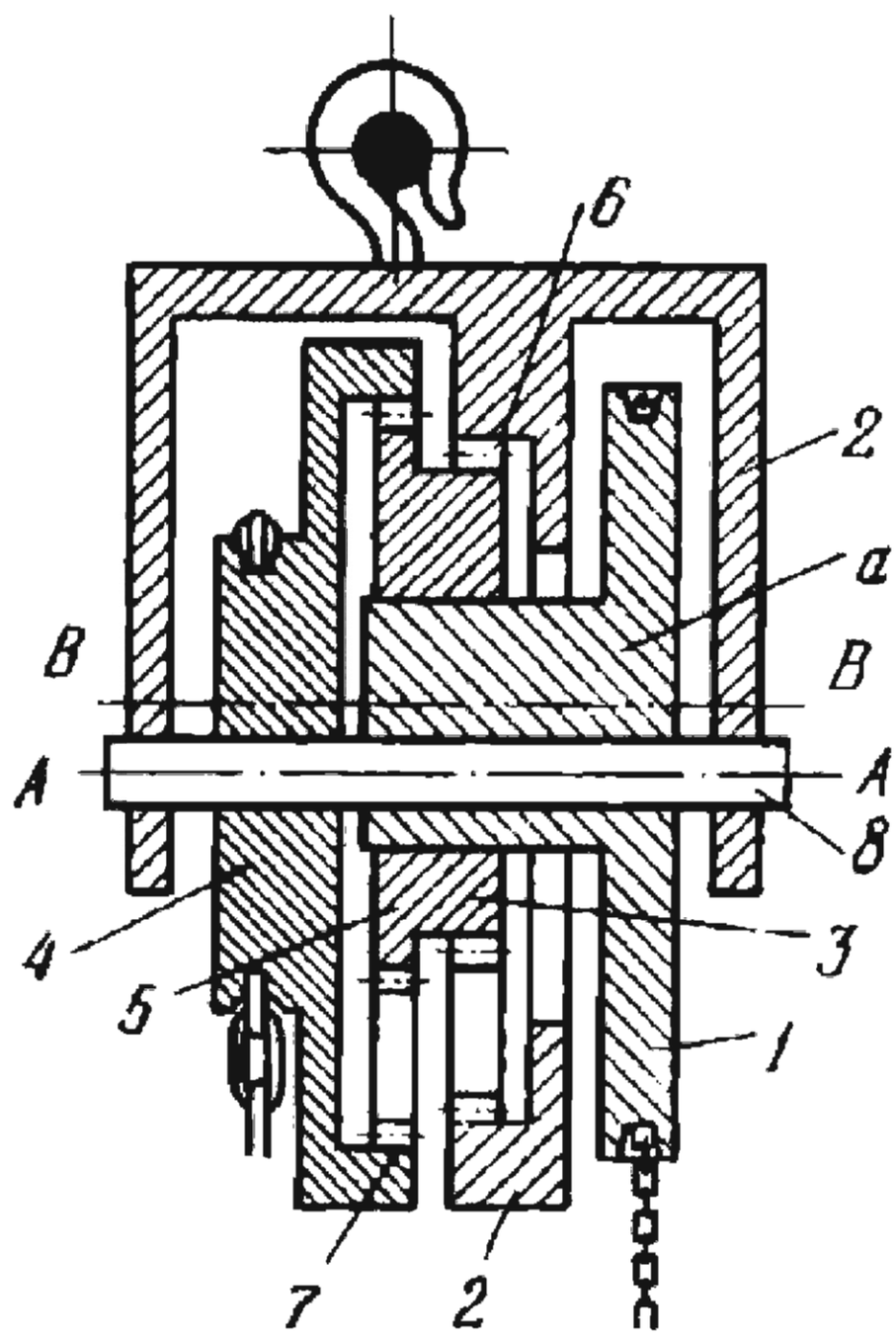

Driving sheave *1*, over which the hand chain runs, is the carrier and rotates about axis *A* on stud shaft *8* of block *2*. Eccentric *a* of sheave *1* is connected by a turning pair to planet gears *3* and *5*. Gears *3* and *5* are rigidly attached together and mesh with internal gear *6*, rigidly attached to block *2*, and internal gear *7* which is rigidly attached to hoisting chain sheave *4*. The speeds n_1 and n_4 of driving sheave *1* and hoisting sheave *4* (in rpm) are related by the equation

$$n_4 = n_1 \frac{z_7 z_3 - z_5 z_6}{z_7 z_3}$$

where z_3, z_5, z_6 and z_7 are the numbers of teeth of gears *3*, *5*, *6* and *7*, which are selected so that the difference $z_7 z_3 - z_5 z_6$ is very small. When sheave *1* rotates, sheave *4* rotates at a much lower speed, hoisting the required load with a large mechanical advantage.

2959	GEARING MECHANISM OF A VIBRATION-TESTING MACHINE	CxG VM

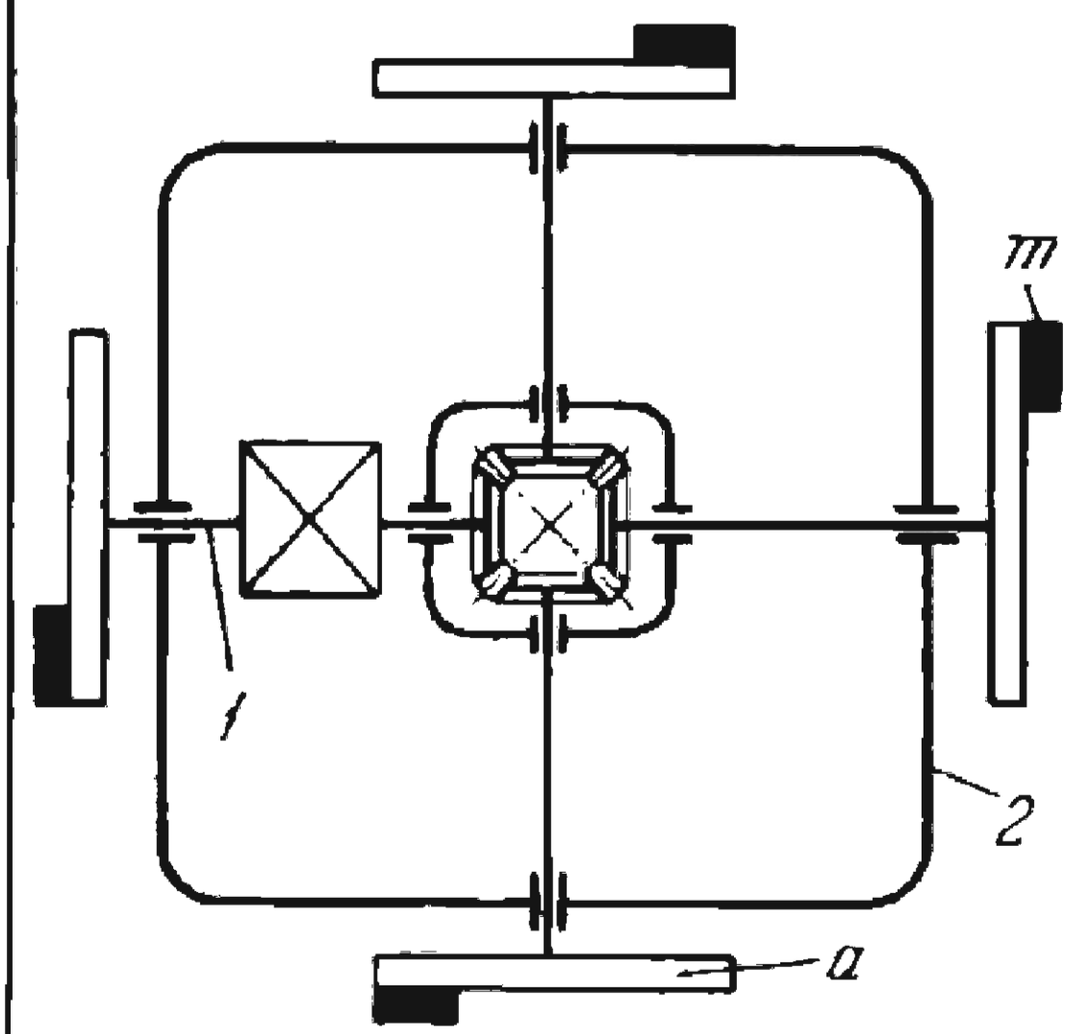

Identical unbalanced masses *m* are secured to disks *a* in such a way that the resultant of the unbalanced forces acts along an axis perpendicular to the plane of the drawing, or so that a torque is produced with respect to this axis. Frame *2* of the machine is rigidly attached to the structure being tested. When shaft *1* rotates, all disks rotate and a vibrational load is applied to the foundation or support being tested.

2960	GEARING MECHANISM OF A VIBRATION-TESTING MACHINE	CxG VM

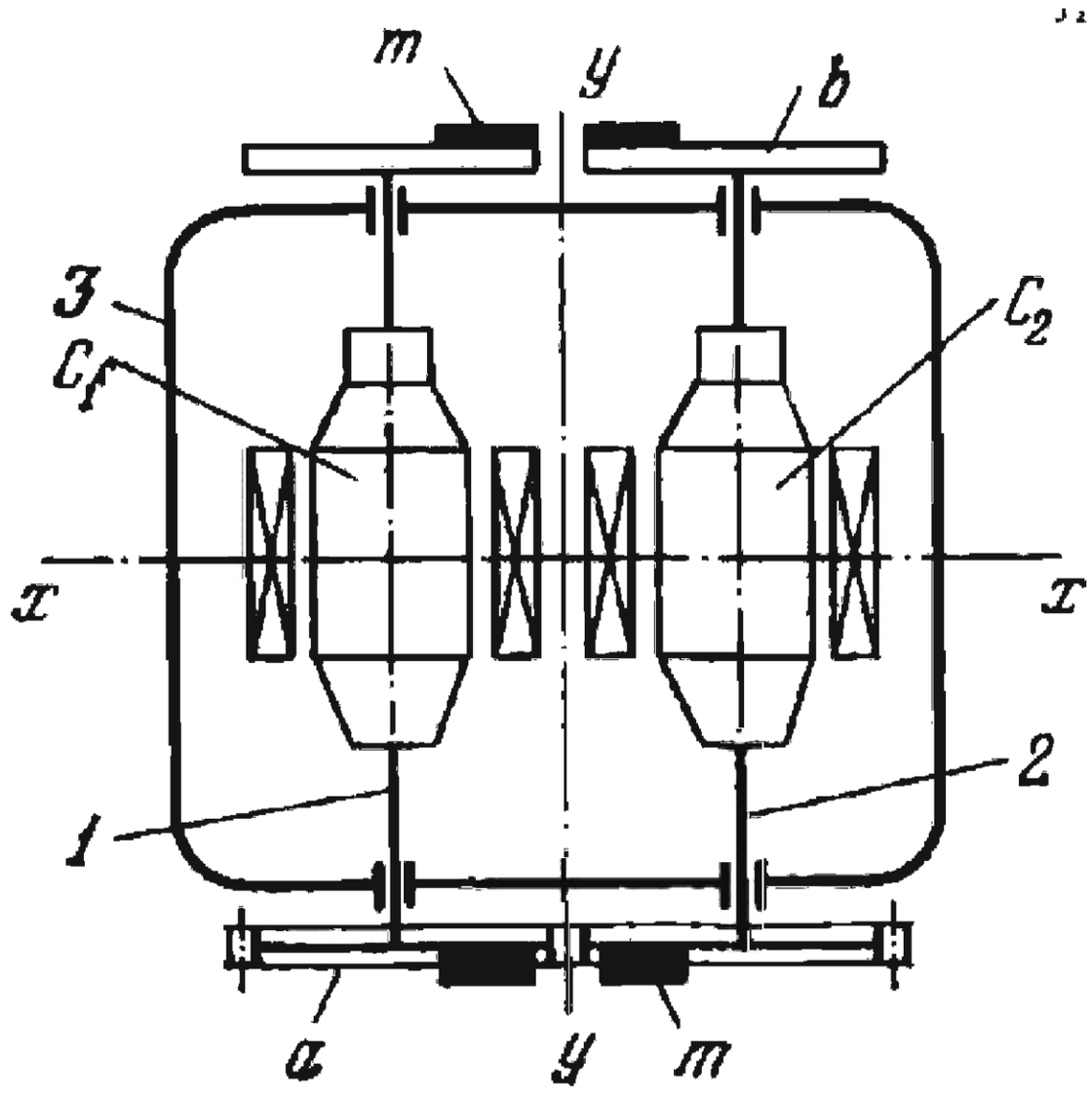

Identical unbalanced masses *m* are secured to gears *a* and disks *b* so that either the resultant of the unbalanced forces acts along an axis perpendicular to the plane of the drawing, or a torque is produced with respect to this axis, or with respect to axis *x-x*. Frame *3* of the machine is rigidly attached to the structure being tested. Rotation is powered by two electric motors C_1 and C_2 linked together by meshing gears *a*. When shafts *1* and *2* rotate, a vibrational load is applied to frame *3* and to the structure being tested.

2961	GEARING MECHANISM OF A MULTIPLE-MASS VIBRATOR	CxG VM

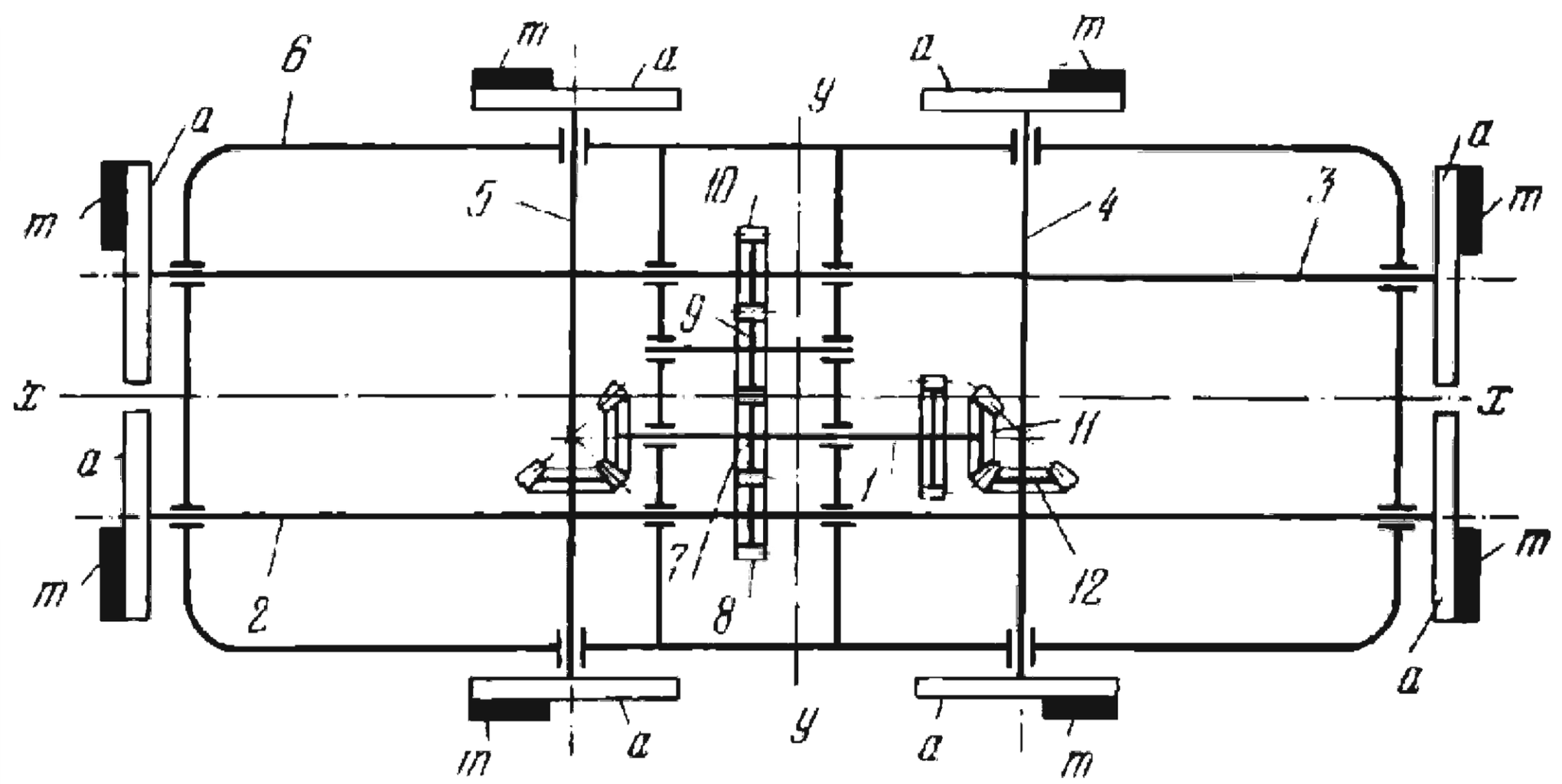

Identical unbalanced masses *m* are secured to disks *a* in such a way that the resultant of the unbalanced forces acts along axis *x-x* or *y-y* or an axis perpendicular to the plane of the drawing, or so that a torque is produced with respect to one of these axes. Rotation is transmitted from shaft *1* to shafts *2* and *3* through gears *7*, *8*, *9* and *10*, and to shafts *4* and *5* through bevel gears *11* and *12*. When shaft *1* rotates, a vibrational load is applied to frame *6* of the vibrator and to the structure which is being tested.

2962	PLANETARY SPUR GEARING MECHANISM OF A REVERSING AND DISENGAGING CLUTCH	CxG C

Disks *e* of friction clutch *5* rotate together with carrier *H*, sliding along its axis. Disk *d* is rigidly attached to the clutch housing, and disk *c* is keyed to shaft *b*. Gear *4* is keyed to shaft *b* and meshes with planet gears *3* which are connected by a turning pair to carrier *H*. Intermediate gear *2* is connected by a turning pair to carrier *H* and meshes with planet gears *3* and with sun gear *1* which is keyed to shaft *a*. When clutch *5* is shifted to the right, shafts *a* and *b* rotate at the same speed in the same direction. When clutch *5* is shifted to the left, shafts *a* and *b* rotate in opposite directions with the transmission ratio

$$i_{ab} = -\frac{z_4}{z_1}$$

where z_1 and z_4 are the numbers of teeth of gears *1* and *4*. When clutch *5* is in its neutral position (as shown) and a resistance torque is applied to shaft *b*, this shaft is stationary and planet gears *3* roll around stationary gear *4*.

2963	PLANETARY BEVEL GEARING MECHANISM OF A REVERSING AND DISENGAGING CLUTCH	CxG C

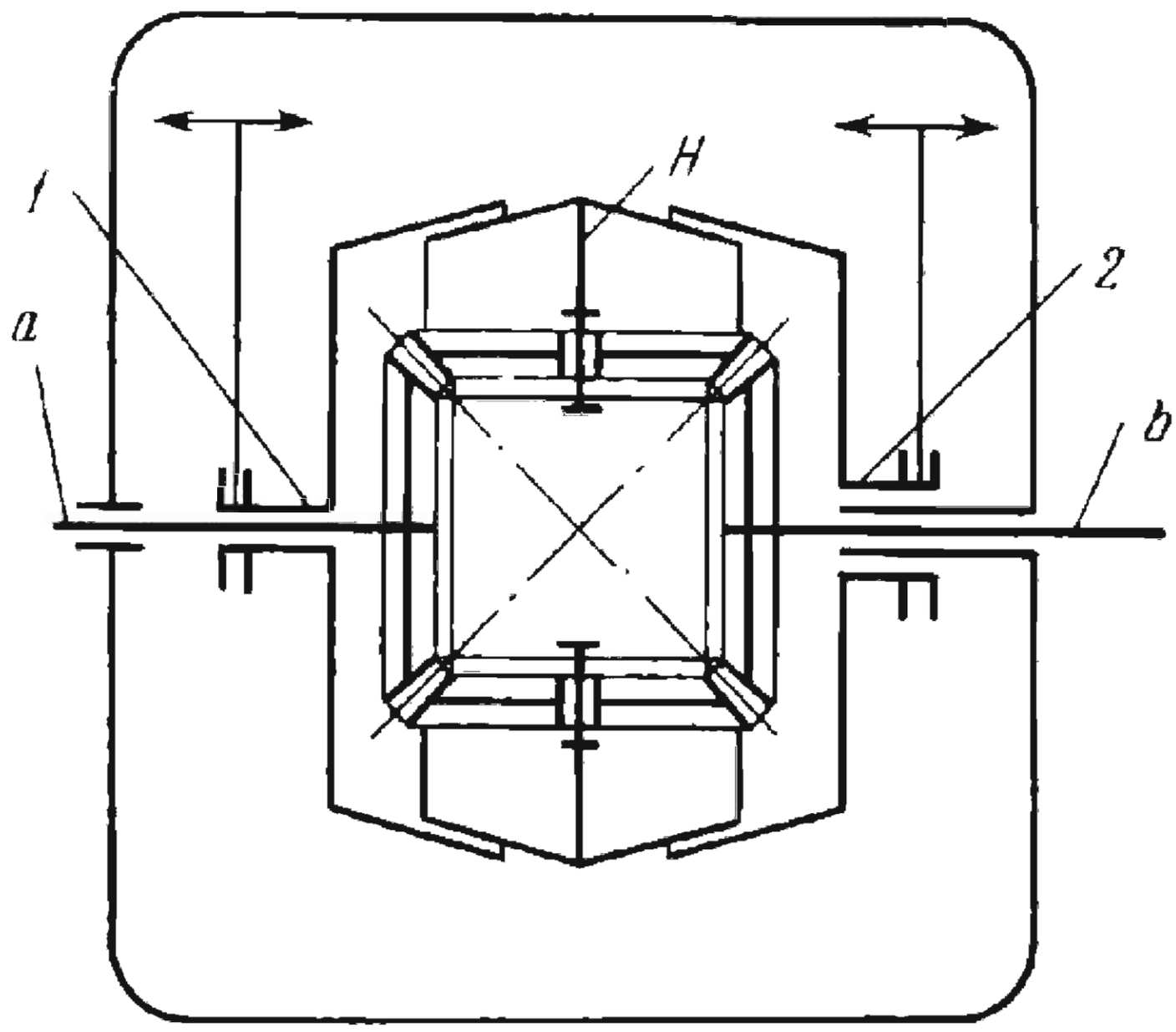

Cone friction clutch *1* rotates together with shaft *a*, sliding along its axis. Cone friction clutch *2* slides along the fixed housing. When clutch *1* is engaged to carrier *H*, driven shaft *b* rotates in the same direction as driving shaft *a*. When clutch *2* is engaged to carrier *H*, shaft *b* rotates in the opposite direction. When both clutches, *1* and *2*, are disengaged (as shown) and a resistance torque is applied to shaft *b*, this shaft is stationary.

2964	RACK-AND-PINION MECHANISM OF A CLOCKWORK TACHOMETER	CxG M

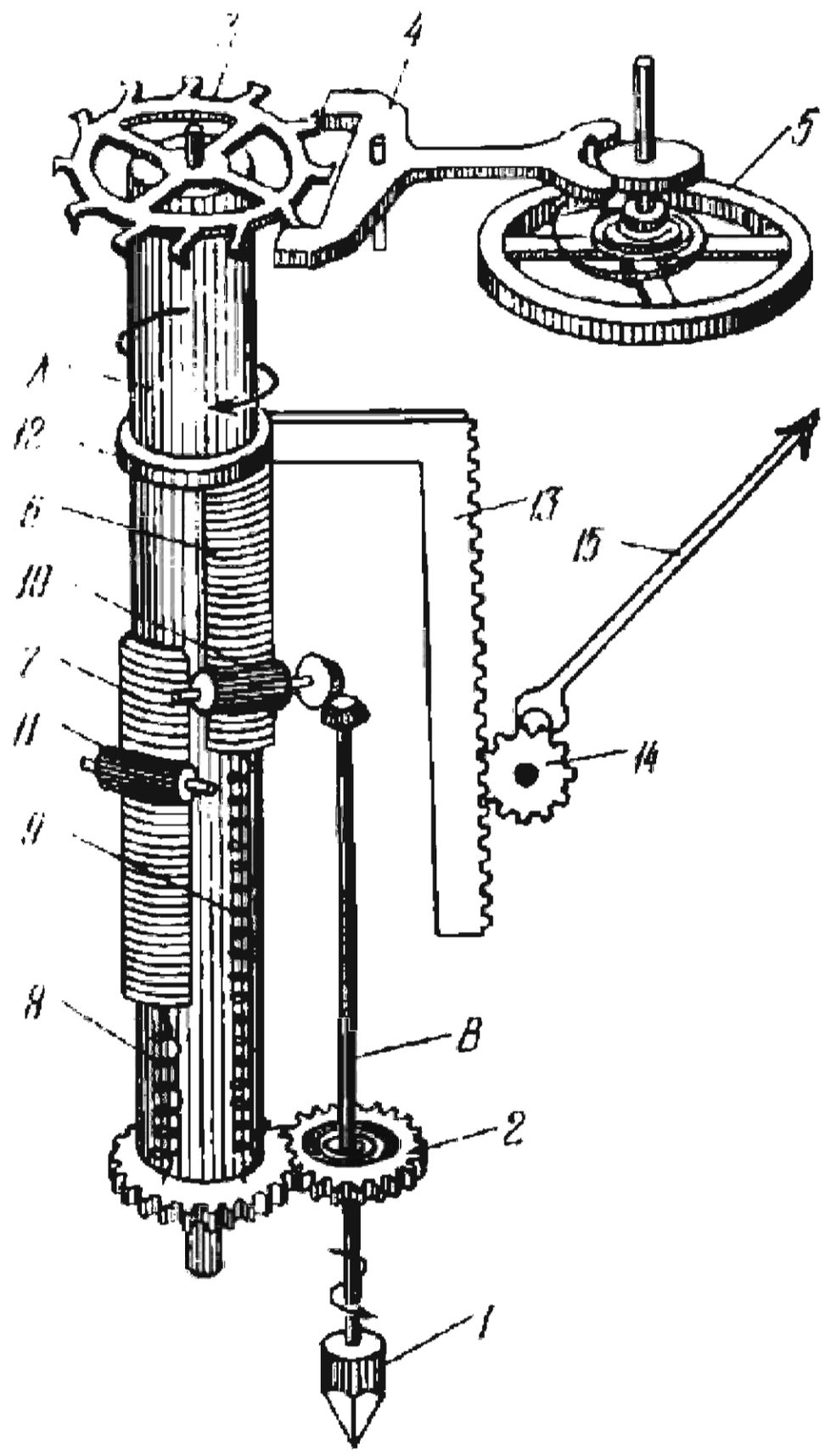

Point *1* is held firmly in contact with the shaft whose speed is to be determined, and its rotation is transmitted from shaft *B* to shaft *A* through the friction spring clutch enclosed in gear *2*. The angular velocity of shaft *A* is maintained constant by means of clockwork consisting of escape wheel *3*, anchor *4* and balance wheel *5*. If the shaft being tested runs at a different speed than the one corresponding to the constant speed of shaft *A*, the friction clutch in gear *2* begins to slip so that the constant speed of shaft *A* is independent of the speed of the tested shaft. Cylindrical gear racks *6* and *7* slide along shaft *A* and are returned to their initial position by springs *8* and *9*. Pinion *10* is driven by shaft *B*. Fixed pinion *11* is held to shaft *A* at an angle of 120° to pinion *10*. During an interval corresponding to one-third revolution of shaft *A*, rack *6* meshes with pinion *10* and is displaced a distance proportional to the number of revolutions of shaft *B* (and the shaft being tested) in this interval. During the next one-third revolution, rack *6* meshes with fixed pinion *11* and consequently remains at the same height. Thus, racks *6* and *7* are alternately raised an amount proportional to the number of revolutions of shaft *B* in the time interval corresponding to one-third revolution of shaft *A*. Racks *6* and *7* raise ring *12* which carries gear rack *13*. This rack rotates pinion *14* and hand *15* which indicates the average speed of the shaft being tested during one-third revolution of shaft *A*.

2965	RACK-AND-PINION MECHANISM OF A DIAL INDICATOR	CxG M

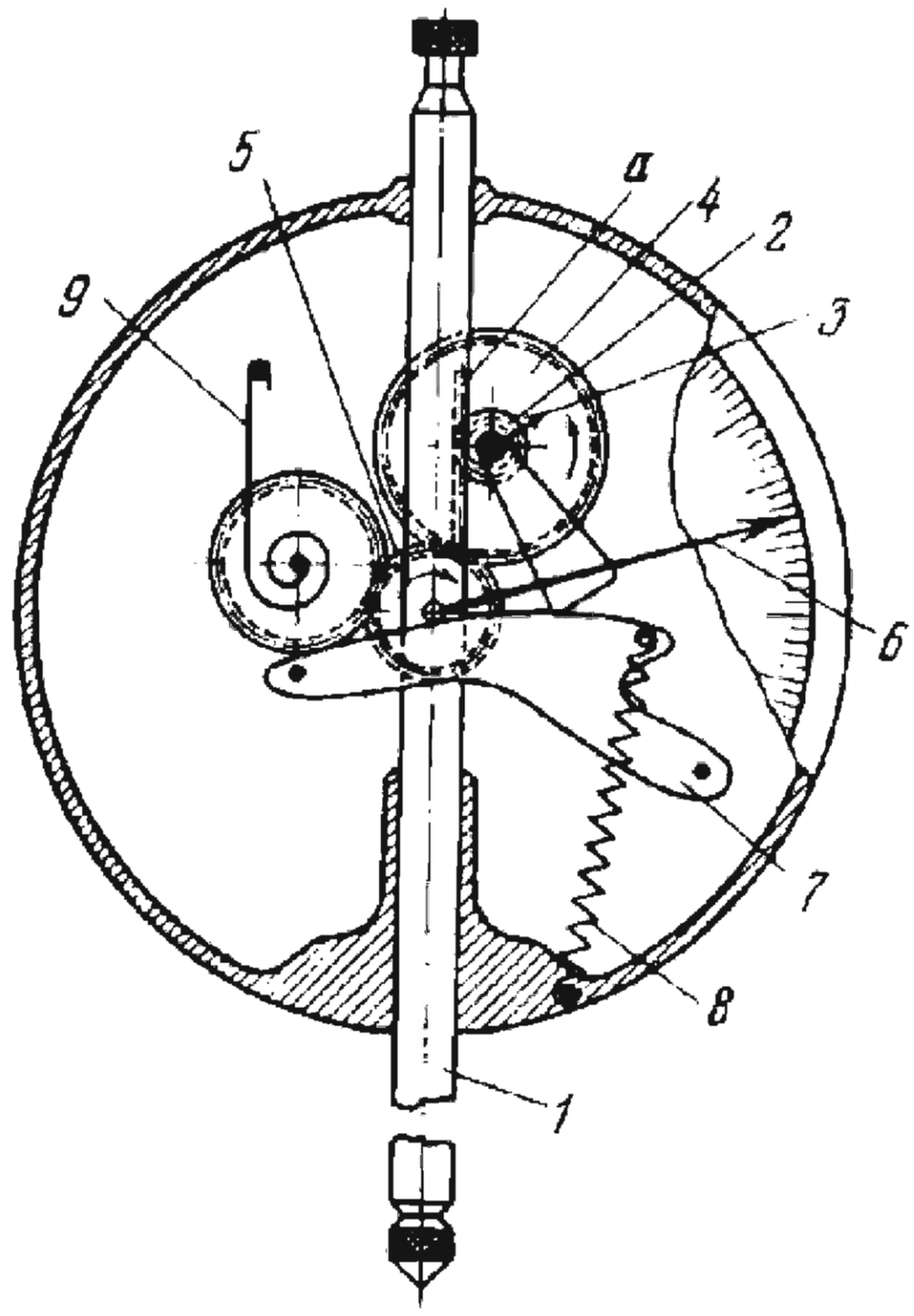

Gear rack *a*, cut on indicator spindle *1*, meshes with pinion *2*. Rigidly attached to pinion *2* are gear *4* and revolution-counter hand (telltale) *3* which indicates the number of whole millimetres of displacement of spindle *1* on a small scale (not shown). Rotation is transmitted through gear *5* to hand *6* which indicates hundredths of a millimetre on the large scale. Through profiled lever *7* spring *8* applies the measuring pressure to spindle *1*. As spring *8* stretches, the arm of the applied force is reduced and the pressure on the spindle remains the same for its initial and final positions. Spring *9* eliminates backlash in the gearing.

2966	RACK-AND-PINION MECHANISM OF A DIAL INDICATOR	CxG M

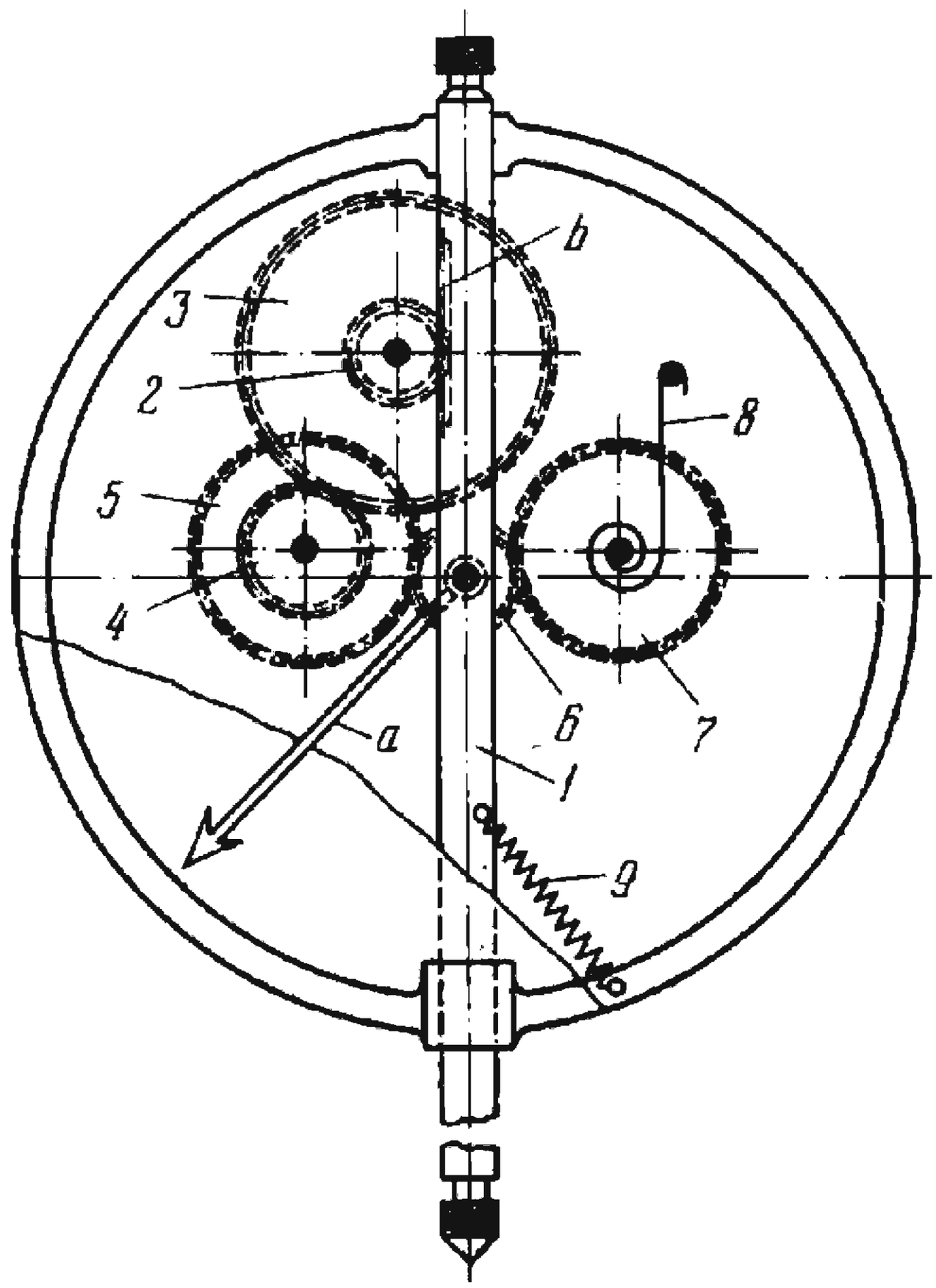

Gear rack *b*, cut on indicator spindle *1*, meshes with pinion *2* which is rigidly attached to a shaft together with gear *3*. Gear *3* meshes with gear *4* which is rigidly attached to a shaft together with gear *5*. Gear *5* meshes with pinion *6* to which hand *a* is rigidly attached. Backlash in the gearing and between rack *b* and pinion *2* is eliminated by pressure gear *7* and spiral spring *8*. The contact pressure required in measurement is applied by spring *9*.

2967	RACK-AND-PINION MECHANISM OF A CENTRIFUGAL RECORDING TACHOMETER	CxG M

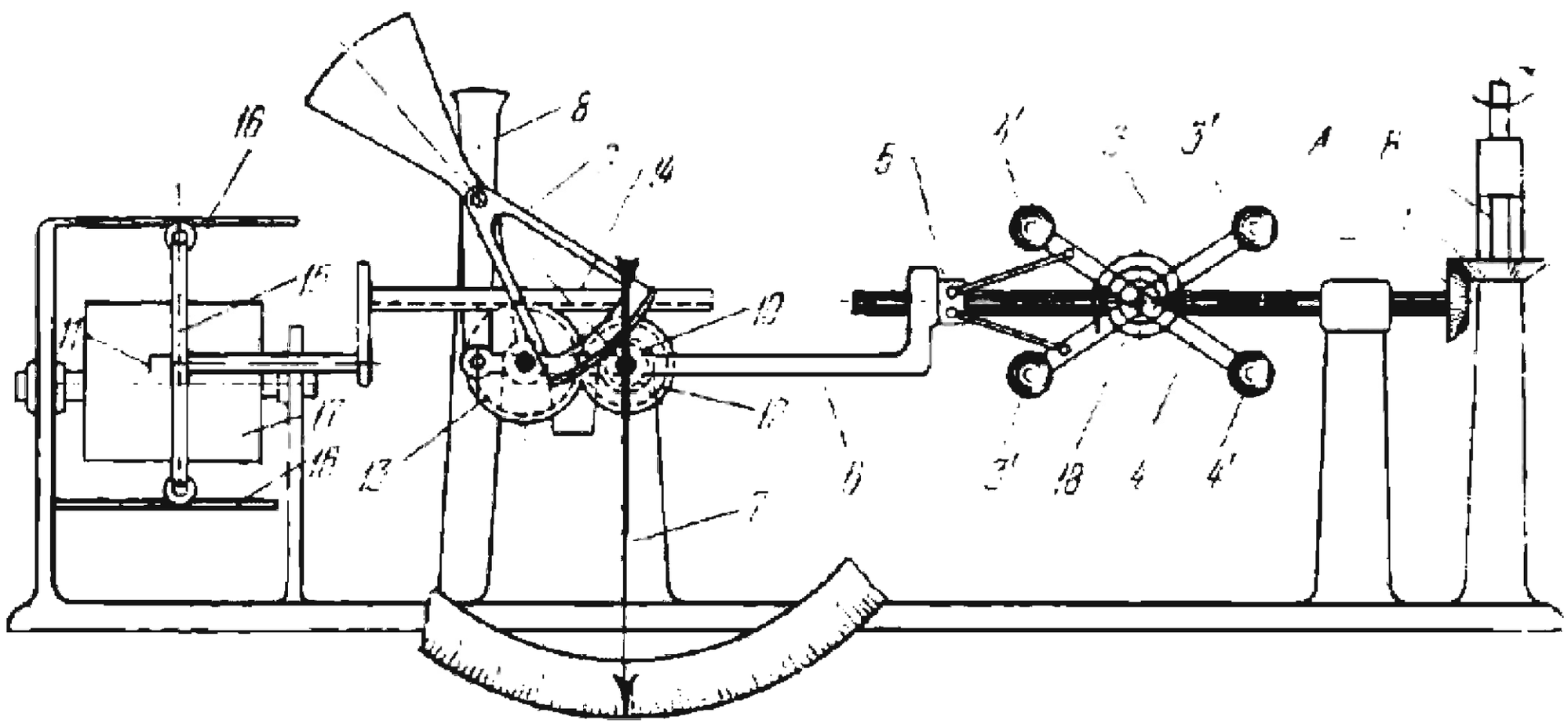

Rotation is transmitted from the shaft whose speed is being recorded to tachometer shaft *A* through shaft *B* and bevel gears *1* and *2*. Hinged to shaft *A* are levers *3* and *4* with weights *3'* and *4'* at their ends. When shaft *A* rotates, the centrifugal force spreads weights *3'* and *4'* and sleeve *5* is shifted to the right together with lever *6*. Motion is transmitted simultaneously to hand *7* (through lever *8*, segment gear *9*, rigidly attached to lever *8*, and pinion *10*) and to pen *11* (through gears *12* and *13*, gear rack *14* and slider *15*). Slider *15*, carrying pen *11*, moves along guides *16*. Drum *17* is driven at constant speed by clockwork. Spring *18* returns levers *3* and *4* to the initial position. Thus the angular velocity of the shaft being tested is simultaneously indicated by hand *7* and recorded on drum *17*.

2968	PLANETARY GEARING BRAKE MECHANISM OF A SAFETY DEVICE	CxG B

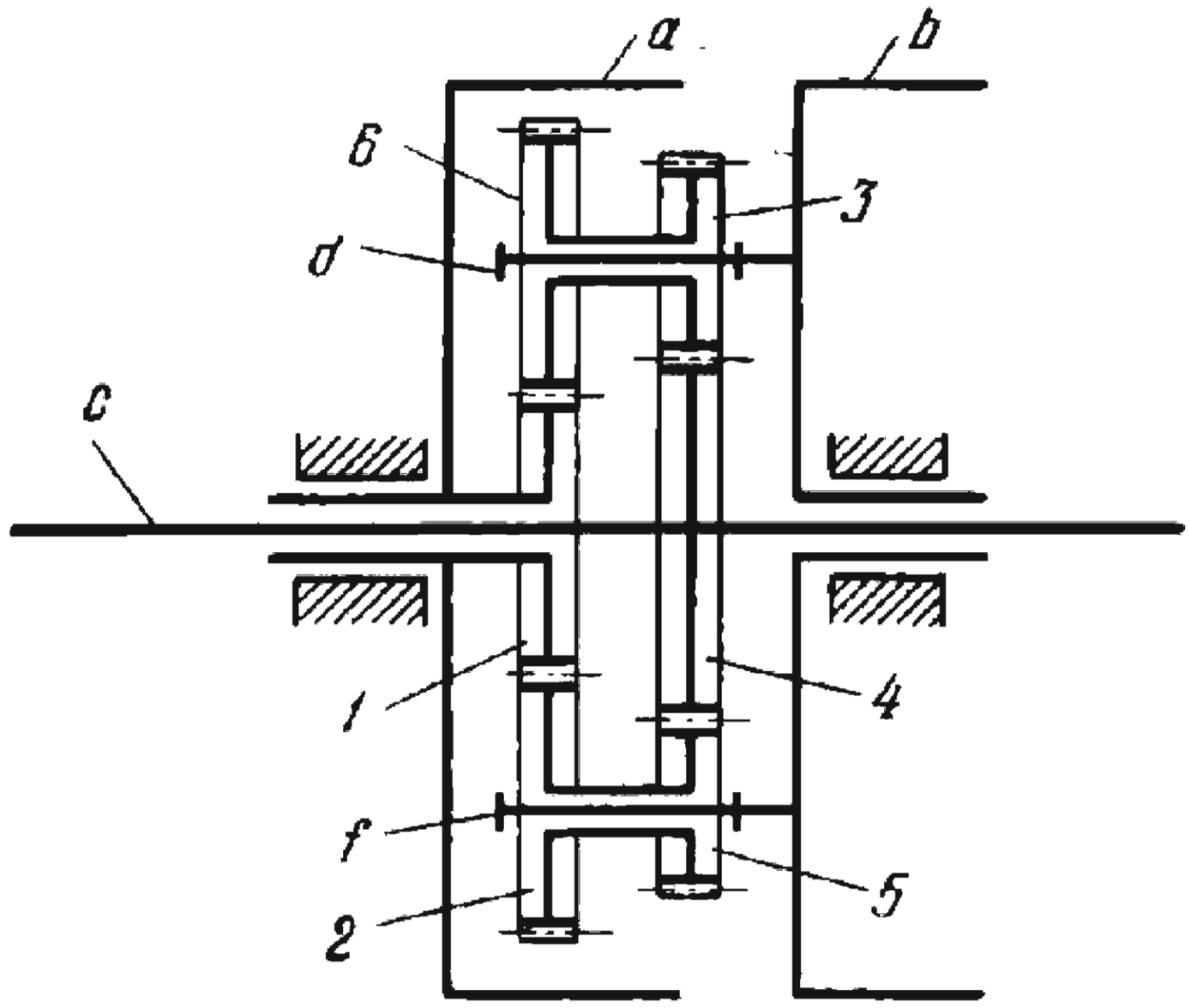

Drum *a* is rigidly attached to gear *1* which meshes with planet gears *2* and *6* of equal pitch diameter. Rigidly attached to gears *2* and *6* are planet gears *5* and *3* of equal pitch diameter. Studs *d* and *f*, about which planet gears *6* and *3*, and *2* and *5* rotate, are rigidly attached to drum *b*. Driven gear *4* is keyed to shaft *c* and meshes with planet gears *3* and *5*. When a brake is applied to drum *b*, studs *d* and *f* are stationary. When shaft *c* is subject to an overload, drum *b* begins to slip, and gears *2*, *5*, *6* and *3* roll around sun gears *1* and *4*.

2969	WORM GEARING MECHANISM OF THE DRIVE AND GOVERNOR OF A SPRING-DRIVEN MOTOR	CxG FD

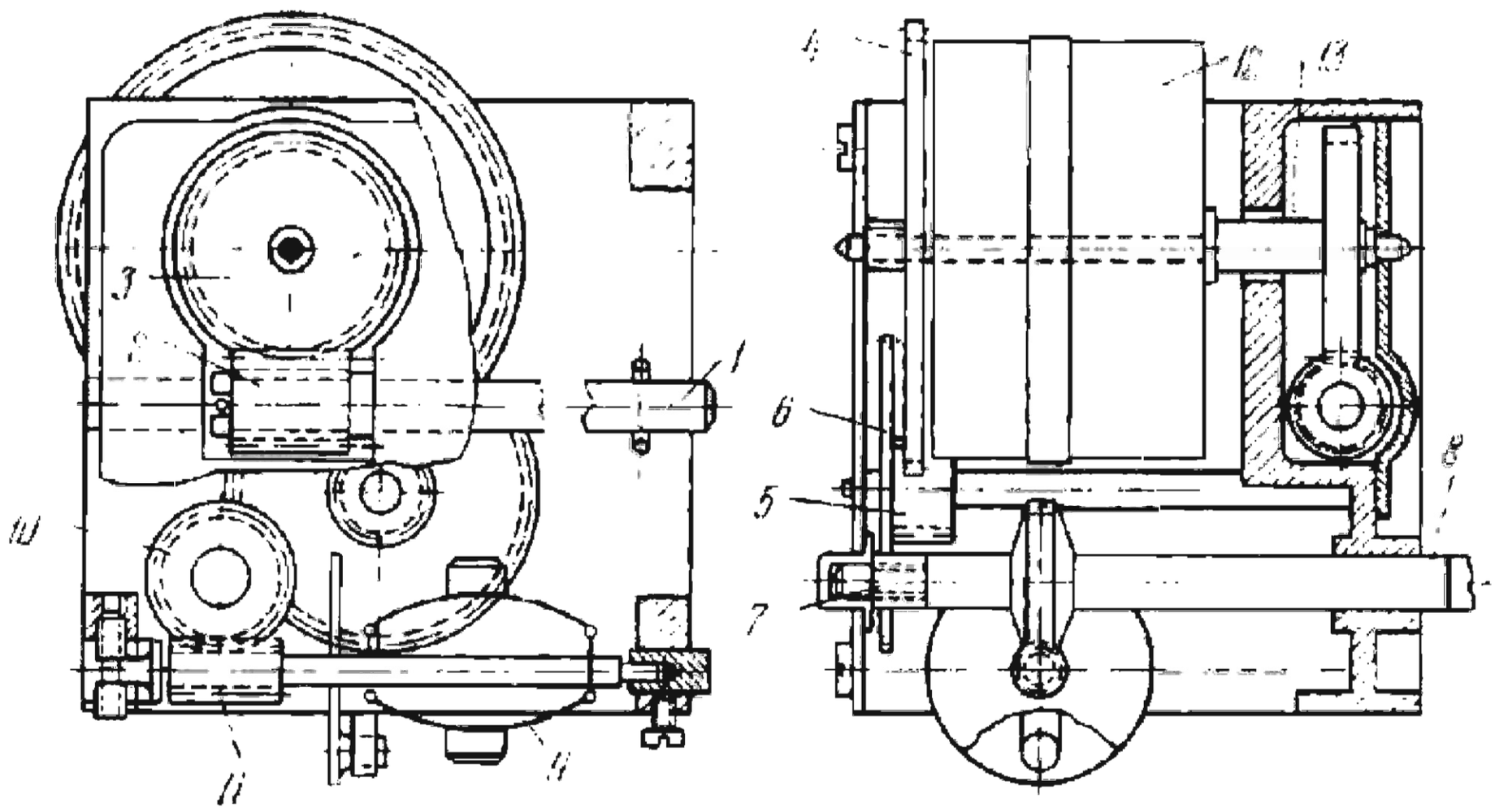

Rotation is transmitted from shaft *1* through worm *2* and worm wheel *3* to shaft *13*. This winds up a flat spiral power spring enclosed in casing *12*. One end of the spring is secured to shaft *13* and the other to casing *12*. The energy stored in the spiral spring is transmitted through gear *4*, rigidly attached to casing *12*, and gears *5*, *6* and *7* to driven shaft *8*. The speed of shaft *8* is controlled by spring-type centrifugal governor *9* which is driven through worm wheel *10* and worm *11*.

2970	DIFFERENTIAL GEARING MECHANISM FOR SWIVELLING AIRCRAFT PROPELLER BLADES	CxG FD

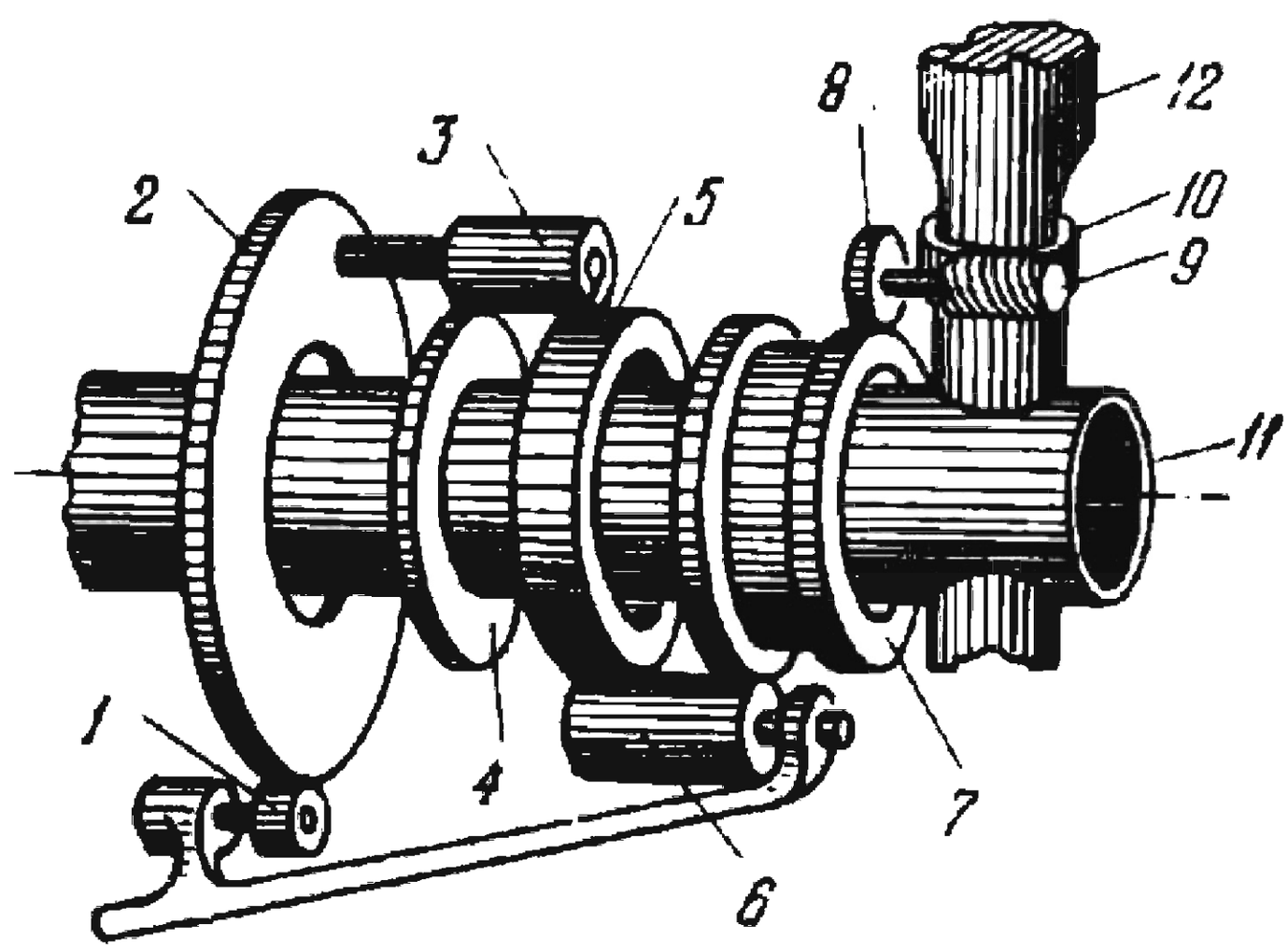

Gear *4* is rigidly attached to shaft *11* and propeller blade *12* can only swivel with respect to this shaft. Pinion *1* is driven by an electric motor (not shown). Gears *4* and *5* have different numbers of teeth and mesh with planet gear *3*. When the electric motor is switched off, gear *2* is stationary and rotation is transmitted from gear *4* through planet gear *3* and gears *5* and *6* to gear *7*. In this case, gears *4* and *7* rotate at the same speed so that gear *8* does not rotate about its axis and the blade is not swivelled. But if the electric motor is switched on, gears *4* and *7* rotate at different speeds so that gear *8* turns and, through worm *9* and worm wheel *10*, swivels blade *12*.

2971	INTERMITTENT GEARING MECHANISM OF A CONVEYER CHAIN	CxG FD

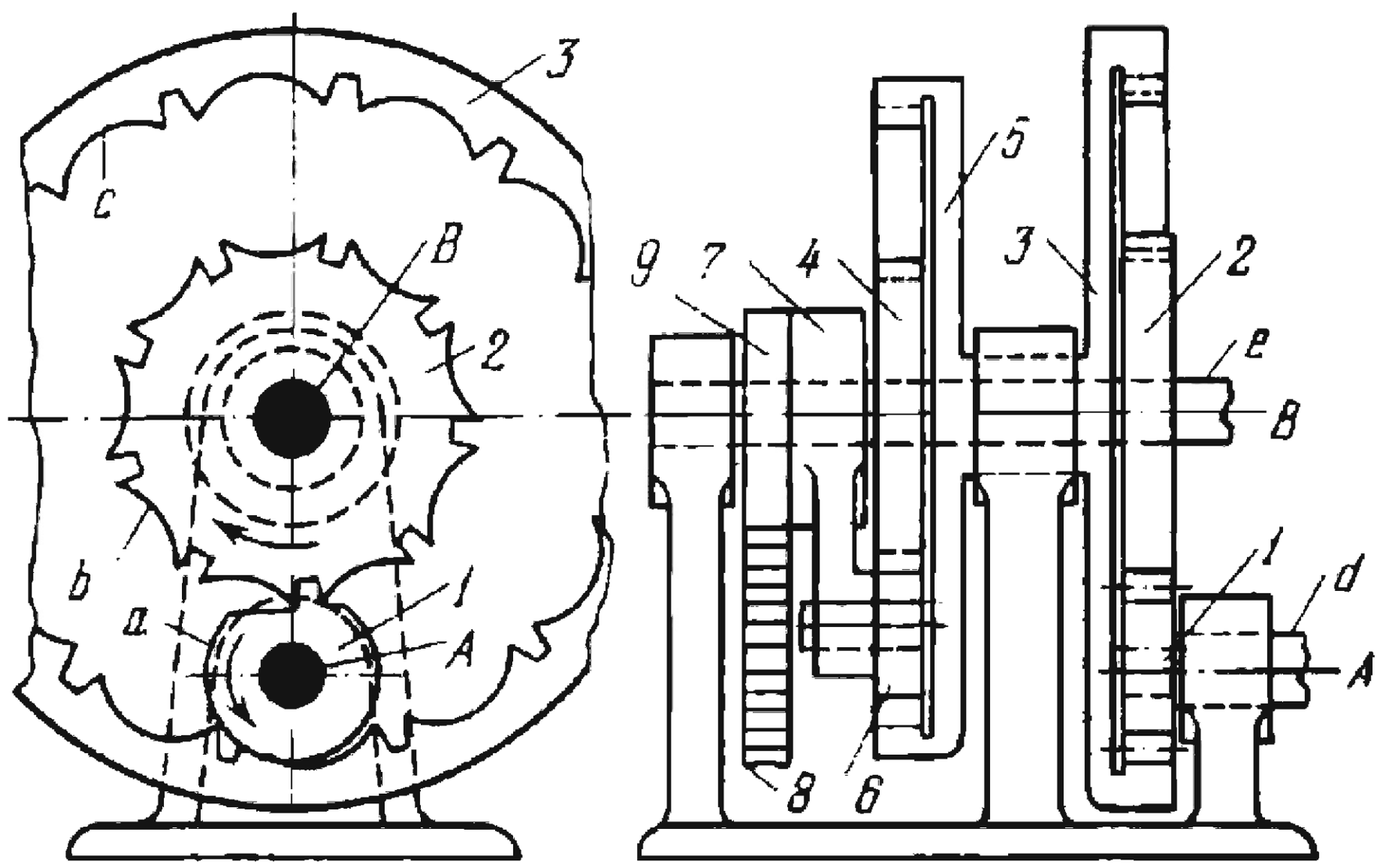

Single-tooth driving gear *1* is keyed to shaft *d*, rotates about fixed axis *A* and meshes alternately with external gear *2* and internal gear *3*, rotating one of them a fraction of a revolution at a time and locking the other during this time. The locking effect is obtained by the engagement of concentric locking surface *a* on gear *1* and concave surfaces *b* on gear *2* or *c* on gear *3*. Gears *2* and *4* are keyed to shaft *e*, and internal gear *5* is keyed to the sleeve of gear *3* which rotates freely on shaft *e*. The rotation of gears *3* and *5* or of gears *2* and *4* is transmitted to planet gear *6* which rolls around gear *4* or in gear *5*, whichever is stationary at the time. Planet gear *6* is connected by a turning pair to carrier *7* and rotates it about shaft *e*. Carrier *7* is rigidly attached to sprocket *9* over which conveyer chain *8* runs. Thus, when shaft *d* rotates continuously in one direction, chain sprocket *9* rotates intermittently, first in the forward direction and then a smaller amount in the reverse direction. This cycle of motion is repeated.

2972	PLANETARY GEARING MECHANISM FOR SPINNING ROPE	CxG FD

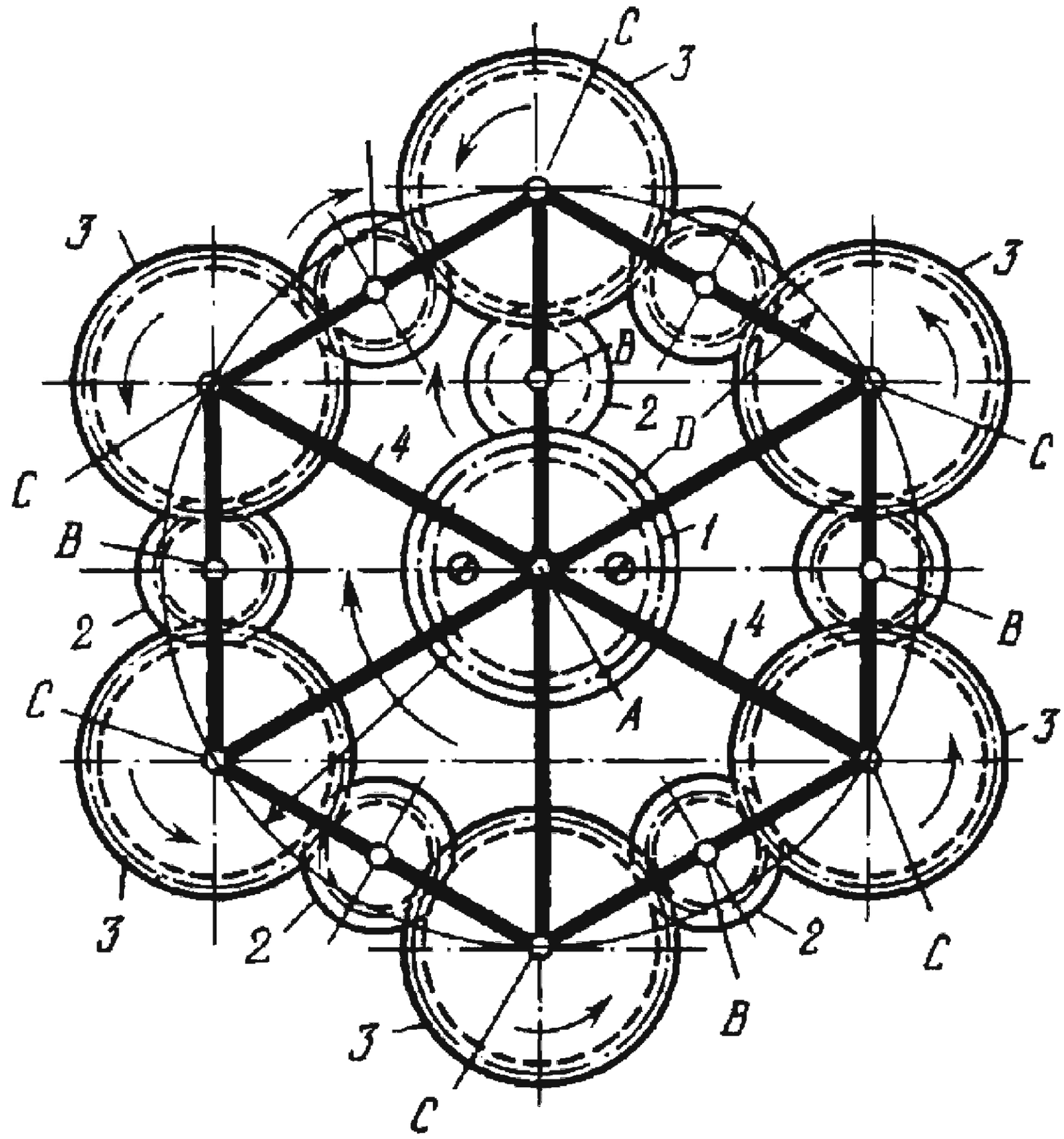

Carrier *4* rotates about fixed axis *A* and is connected by turning pairs *B* and *C* to planet gears *2* and *3*. One planet gear *2* meshes with a gear *3* and with fixed gear *1*. Each of the other gears *2* meshes with two adjacent gears *3*. Carrier *4* is designed as a polygon with equal sides (a hexagon in the given case). The length of each side is equal to distance $\overline{AC}$. Thus the apexes of the hexagon lie on a circle of diameter $D = 2\overline{AC}$. Gears *1* and *3* have the same number of teeth. Thus all points of gears *3* have circular translational motion at the velocity of point *C* of carrier *4*.

2973	PLANETARY GEARING MECHANISM OF A FLAT-BED PRINTING PRESS	CxG FD

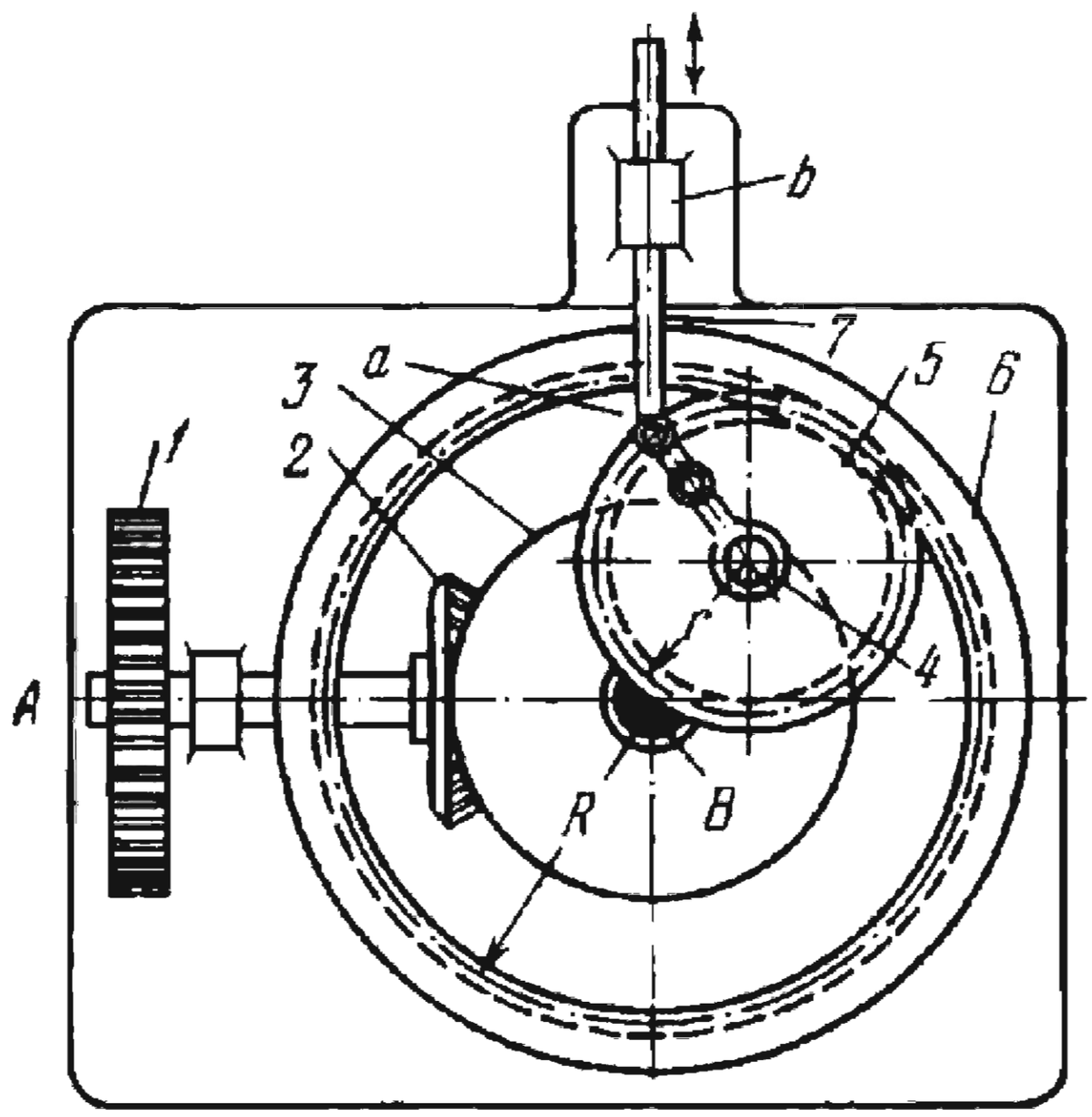

The dimensions of the links comply with the condition: $2r = R$, where r and R are the pitch radii of planet gear *5* and internal gear *6*. When gear *1* rotates about fixed axis *A*, rotation is transmitted through bevel gear *2* to bevel gear *3* which rotates about fixed axis *B* and carries stud *4* about which gear *5* rotates. Gear *5* meshes with fixed internal gear *6*. Connected by a turning pair to gear *5* is link *7* which is connected to the press bed (not shown) and reciprocates in fixed guide *b*. Point *a*, the pivot of link *7*, is located on the pitch circle of gear *5*.

2974	GEARING MECHANISM FOR FORMING A HELICAL RIBBON	CxG FD

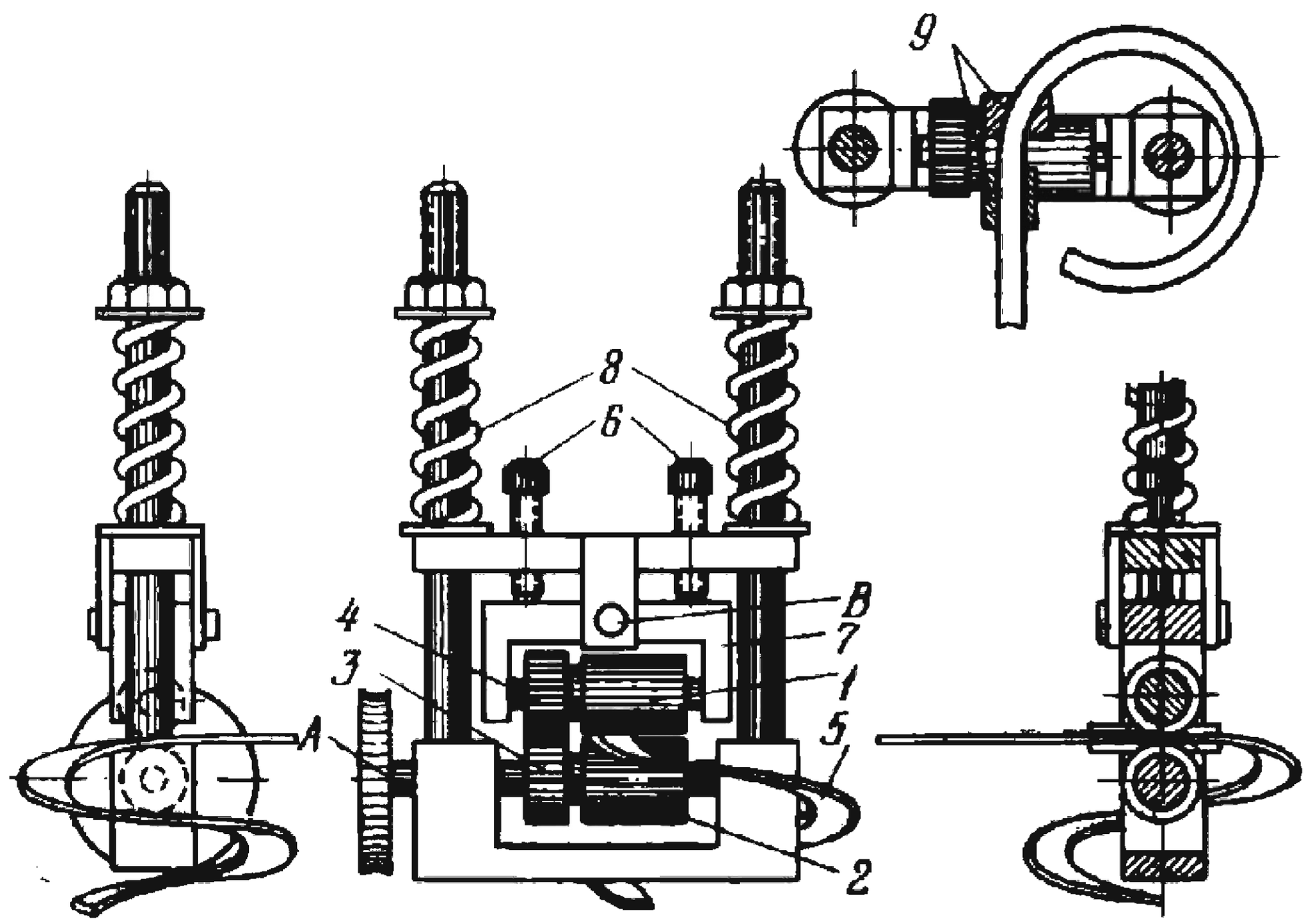

Rolls *1* and *2*, whose axes make a small angle, are driven from shaft *A* through meshing gears *3* and *4*. The strip of stock *5* is subject to varying pressure as it passes through the rolls. The left edge is subject to more strain than the right edge. This forms the straight strip into a helical ribbon. The angle between the rolls is adjusted by screws *6* which turn yoke *7* about fixed axis *B*. Pressure is applied to the top roll by springs *8* whose tension can be varied by nuts. The diameter of the helix is maintained constant by guide *9*.

2975	RACK-AND-PINION MECHANISM OF A PRECISION HELICAL GRINDING ATTACHMENT	CxG FD

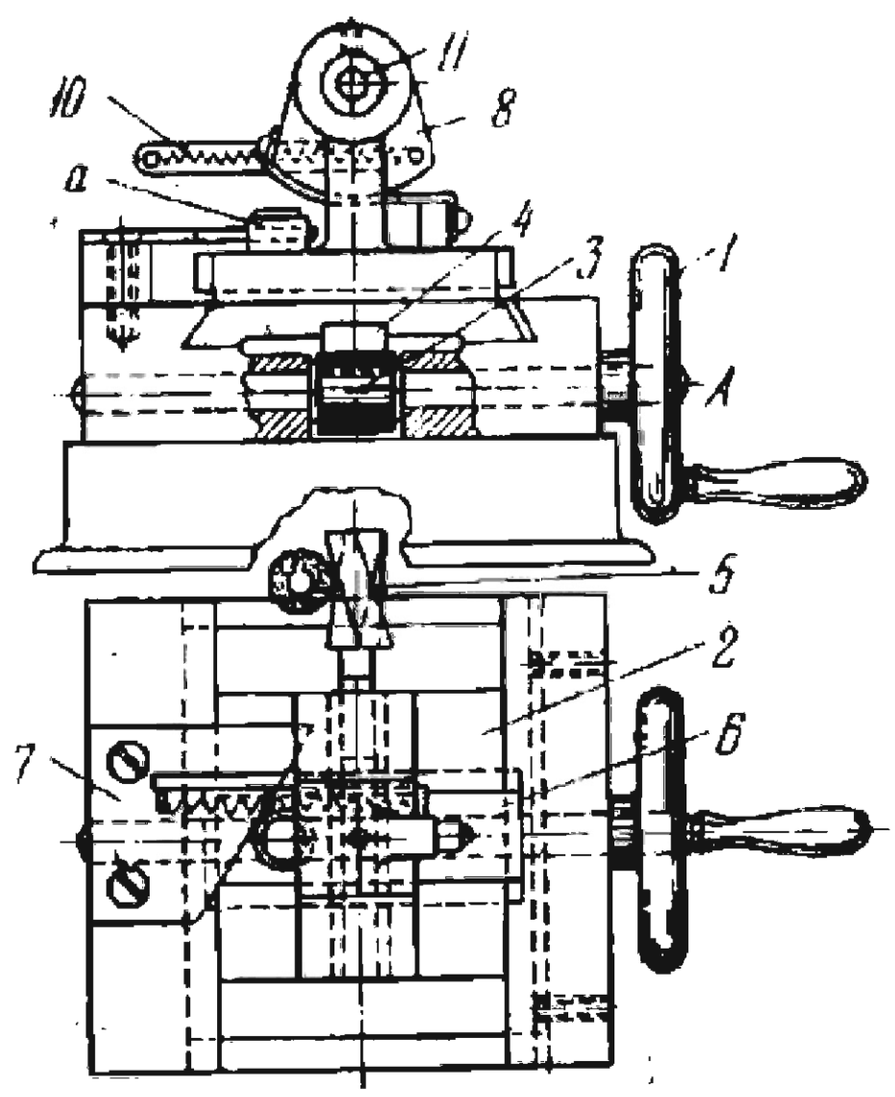

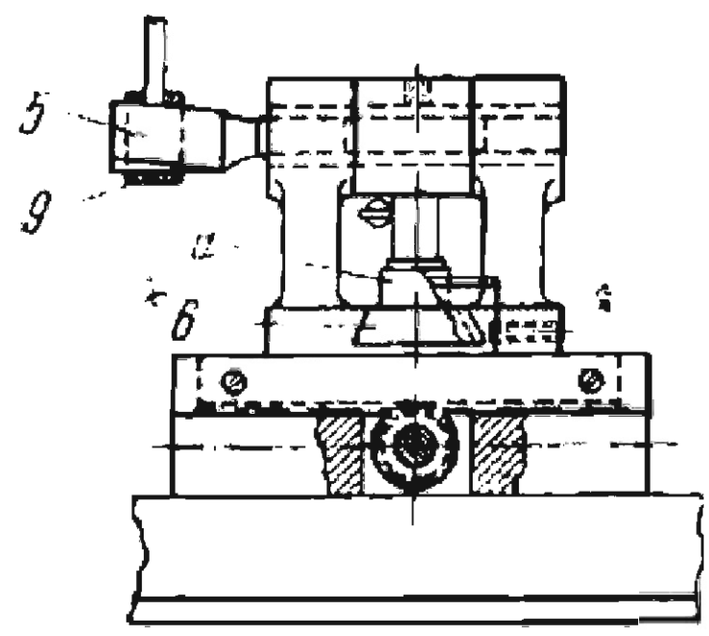

When handwheel *1* is rotated about fixed axis *A*, motion is transmitted to slide *2* through pinion *3* and rack *4*. This traverses shaft *11* with workpiece *5*. At this, roller *a*, mounted on cross-slide *6*, contacts cam *7* and moves crosswise with respect to slide *2*, turning quadrant *8*, connected to cross-slide *6* by a flexible steel band, and shaft *11*. Thus, a helical motion is imparted to workpiece *5*. This enables the helical surface on the workpiece to be precisely ground by grinding wheel *9*.

Spring *10* holds roller *a* in contact with cam *7*.

2976	GEAR AND SCREW REVERSING MECHANISM OF A BOBBIN WINDING FRAME	CxG FD

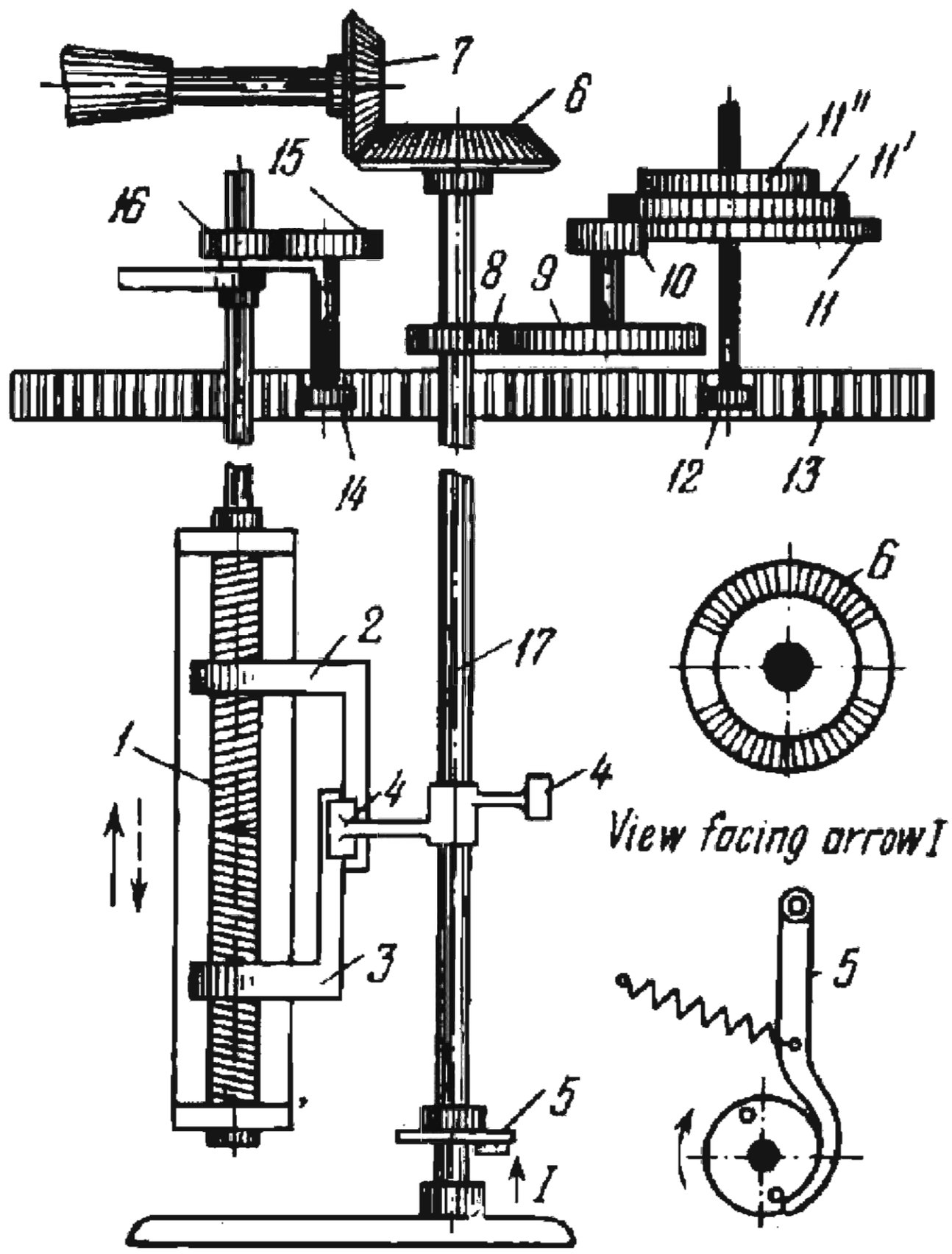

Screw *1*, having right- and left-hand threads, and nuts with plates *2* and *3*, together with the bobbin carriage, are reciprocated vertically by a special mechanism (not shown). Reversing dogs *4*, rigidly mounted on shaft *17*, prevent rotation of the shaft while the dogs slide along the plates of links *2* and *3*. As soon as one of the dogs *4* passes the end of a bar of link *2* or *3*, shaft *17* is turned by lever *5* and link *6*, keyed to shaft *17* and comprising two bevel gear segments, is brought into mesh with bevel gear *7*. Rotation is transmitted through spur gears *8*, *9*, *10*, *11* and *12*, rack *13*, gears *14*, *15* and *16* to screw *1* and, as a result, the distance is reduced between links *2* and *3*. After making one-half revolution, gear *6* stops and the carriage with the bobbin is reversed. When it has travelled a certain distance, rack *13*, by means of a certain mechanism (not shown), reduces the angular velocity of the bobbin. Upon each reversal of shaft *17*, the angular velocity of the bobbin is reduced due to the displacement of rack *13* and the stroke of the carriage is reduced because links *2* and *3* are brought closer and closer together. This imparts the required shape to the roving wound onto the bobbin. Depending upon the thickness of the roving being wound, gear *10* is engaged to gear *11*, *11'* or *11''*.

2977	GEARING MECHANISM OF A CONTROLLABLE-PITCH PROPELLER	CxG FD

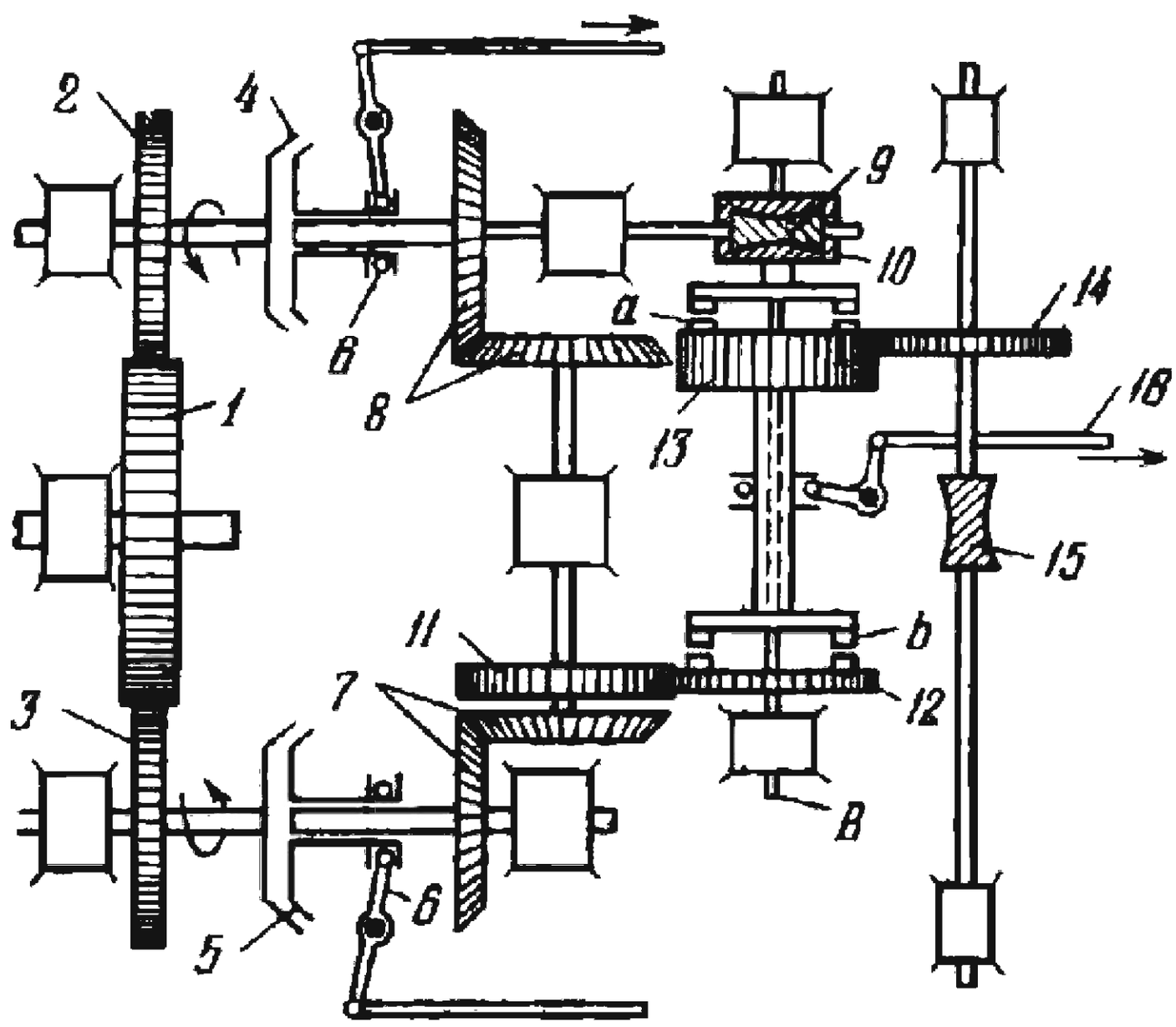

Gear *1* meshes with and drives gears *2* and *3*. When clutch *4* is engaged by means of shifter *6*, rotation of gear *2* is transmitted through worm *9*, worm wheel *10* and, if clutch members *a* are engaged, further through gears *13* and *14* to worm *15*. The pitch of the propeller (not shown) is either increased or decreased, depending upon the direction of rotation of worm *15*. When clutch *5* is engaged by means of another shifter *6*, rotation of gear *3* is transmitted through bevel gears *7* and *8*, worm *9*, worm wheel *10* and further through gears *13* and *14* to worm *15* which now rotates in the reverse direction. Worm *9* and worm wheel *10* have a high transmission ratio and serve for slowly varying the pitch of the propeller. If the pitch is to be rapidly changed, clutch members *a* are disengaged and members *b* are engaged by means of shifter lever *16*. Then rotation is transmitted through gears *11*, *12*, *13* and *14*. In this case, if clutch *5* is engaged, rotation is transmitted from gear *3* through bevel gears *7*, gears *11* and *12*, and further through gears *13* and *14* to worm *15*. If clutch *4* is engaged, rotation is transmitted from gear *2* through bevel gears *8*, gears *11*, *12*, *13* and *14* to worm *15* which then rotates in the reverse direction.

INDEX

Adding mechanism,
differential bevel gearing, for two addends, 622
differential rack-and-pinion, for three addends, 621
differential rack-and-pinion, for two addends, 623
lever-gear, with zeroing hand, 220
rack-and-pinion, with rack-type zeroing device, 625
worm-gear, 504
worm-gear, with flexible link, 505
Artobolevsky, 191, 192, 193
Axial motion mechanism, bevel gear, of inking cylinders in platen printing presses, 117

Band-brake mechanism, ratchet-type, 440
for hoisting, 439
Band clamping mechanism, lever-gear, Ustsov, 254
Bar cutter mechanism, lever-gear, 281
Bevel gearing mechanism,
of a differential, 591
of a differential with interlocking clutch, 593
spatial differential, with crown gears, 597
Bevel and spur gearing mechanism of a differential, 592
Blade-turning mechanism, lever-gear, 127
Brake mechanism, planetary gearing, of a safety device, 643

Cam and gear mechanism for converting motion, 612
Cam-gear mechanism,
with complex driven link motion, 468
differential, closed-system, 467
with internal engagement, 466
rapid-rise, 465
Cam-lever mechanism, planetary, with variable driven lever dwell, 470
Cam-pin-wheel mechanism with pin-wheel dwells, 298
Cam slot milling mechanism, sine-curve, slotted-lever-gear, 286
Centrifugal recording tachometer mechanism, rack-and-pinion, 642
Centrifugal tachometer mechanism, lever-gear, 247, 249
with speed gearbox, 246
Centrode gearing,
elliptical and oval, three-link, 30, 31
elliptical, three-link, 21
logarithmic-curve, four-lobe, three-link, 25
logarithmic-curve, three-lobe, three-link, 24
logarithmic-curve, two-lobe, three-link, 23

Centrode gearing,
oval, four-lobe, three-link, 28
oval, three-link, with two- and three-lobe wheels, 29
oval, three-lobe, three-link, 27
oval, two-lobe, three-link, 26
three-link, with circular and noncircular wheels, 32
three-link, with noncircular pinion and rack, 41
Chain hoist mechanism, planetary gearing, 634
Checking mechanism, lever-gear, for tractor gearbox covers, 265
Circular sawing machine mechanism, lever-gear, 283
Clamping device, rack-and-pinion, 114
Clock spring winding mechanism, ratchet-gear, 375
Clockwork drive mechanism, pendulum, ratchet, 459
Clockwork tachometer mechanism,
cam-gear, 476-7
rack-and-pinion, 639
Clutch mechanism, lever-gear, for intermittent motion, 256
Contour turning mechanism, complex, planetary, lever-gear, 289
Controllable-pitch propeller mechanism, gearing, 652
Conveyer chain mechanism, intermittent gearing, 646
Conveyer mechanism, differential, cam-gear, 481
Coordinate mechanism,
polar, lever-gear, 208, 210
rectangular, rack-type, slotted-lever-gear, 205
rectangular, screw-type, slotted-lever-gear, 207
rectangular, spiral-type, slotted-lever-gear, 206
spatial, lever-gear, 209
Copying device mechanism,
cam-gear, for tracing curves, 479
worm gearing, 513
Cosine generator, lever-gear, 202
Counter, automatic ratchet-type, for log chain conveyer, 456
Counter mechanism,
coaxial, pin-wheel, 369
single-pin-wheel, 368
Crank-and-rocker-arm mechanism, planetary, lever-gear, 171
Cylinder cam machining mechanism, worm gearing, 512

Detent mechanism, ratchet-type, 436, 437
Dial feed mechanism, ratchet, 457
Dial indicator mechanism,
rack-and-pinion, 640, 641
worm gearing, 507
Differential bevel gearing mechanism,
with carrier drive, 586
with different size gears, 587
Differential gearing mechanism with eccentric parallel-crank linkage, 581
Differential gearing and screw mechanism, 594
Differential mechanism, gear-and-wedge, for changing eccentricity, 109
Double gear for eliminating backlash in toothed gearing, 110
Double-swing mechanism,
four-gear, planetary, lever-gear, 138
two-gear, planetary, lever-gear, 136
Dough kneading machine mechanism, lever-gear, 259, 273, 274
Drive and governor mechanism, worm gearing, of spring-driven motor, 644
Dwell mechanism,
adjustable, spatial, cam-gear, 469
double-ratchet, 423
nonsymmetric, pin-wheel-sprocket, with external engagement, 311
pin-rack-sprocket, 320
pin-wheel, 317, 328, 330
pin-wheel-cam, 331
pin-wheel-lever, 332

Dwell mechanism,
pin-wheel, with locking pawl, 317
pin-wheel, with nonuniform gear rotation, 327
pin-wheel-rack, 319
pin-wheel-sprocket, 326
pin-wheel-sprocket of a counter, 318
pin-wheel-sprocket, with external engagement, 310, 312, 321, 322, 324
pin-wheel-sprocket, with internal engagement, 313, 314
pin-wheel-sprocket, with locking pawl, 315, 316
pin-wheel-sprocket, with locking rollers, 323
pin-wheel-sprocket, with three driven links, 625
planetary, cam-gear, 472
ratchet-type, 424, 425
ratchet-type, for sprocket-chain conveyer, 427
spatial, cam-gear, 471
spatial, pin-wheel-cam, 329, 330
toothed, four-link, with circular locking feature, 78
toothed, three-link, with straight locking feature, 78
Dynamograph ratchet mechanism, spring-type, tension, Revyakin, 455

Electric hoist mechanism, planetary gearing, 629
Electric hoist mechanism, two drum, differential gearing, 630
Electric pulley block mechanism, closed-system, differential gearing, 631
Elliptical gearing, four-link, with three gears, 71
Escapement mechanism, 376, 377, 385, 394
fork-type, 394
rack-type, 387
rack-type, of a typewriter carriage, 460
ratchet, pin-type, 374

Feed mechanism,
adjustable, ratchet-type, 448
automatic, ratchet-type, 450
cam-gear, 474
differential intermittent, ratchet-type, 449
intermittent, ratchet-type, 451
strip, toothed rack-and-gear, 103
Feeding mechanism,
gear-and-screw, 106
intermittent gearing, 363
paper sheet, lever-gear, 271
toolhead, gear-and-screw, planetary, 104
toothed rack-and-pinion, for cylindrical parts, 103
Feeding and shearing mechanism, gear-type, three-link, 107
Fergusson, 549
Flat-bed printing press mechanism, planetary gearing, 648
Flax fibres treating mechanism, lever-gear, 288
Flax scutcher mechanism, planetary, lever-gear, 285
Flour mill gearing, spatial, pin-wheel, 365

Gear-screw mechanism with segment gear, 493
Gearbox mechanism,
eight-speed, with clutch, intermeshing gear cones and sliding key, 538
eight-speed, with two cluster gears and clutch, 537
five-speed, with gear cone and tumbler gear, 531
five-speed, with intermeshing gear cones and sliding key, 534
five-speed, reversible, 532
five-speed, with two gear cones and slanting guide, 533
four-speed, with clutches on input and intermediate shafts, 524
four-speed, with clutches on input and output shafts, 522, 525
four-speed, with clutches on input shaft, 526

Gearbox mechanism,
four-speed reversible, with brake drums, 528
four-speed reversible, with claw clutch, 529
four-speed reversible, with clutch on input shaft, 527
of reversing and disengaging clutch with brake drum, 530
six-speed, with clutch on output shaft, 535
six-speed, with clutches on input and output shafts, 536
sixteen-speed, with four clutches, 540, 541
sixteen-speed, with friction clutch and sliding gears, 544
sixteen-speed, with three output shafts, 542-543
three-speed, 519, 521, 523
twelve-speed, with two clutches and flexible link, 539
twenty-four-speed, with sliding cluster gears, 545
two-speed, 518, 520
two-speed, with toothed clutch, 517
Gearing mechanism,
for driving two shafts intermittently and alternately, 616
of multiple-mass vibrator, 636
for one way rotation with reversing drive, 617
for solving system of algebraic equations, 626
of vibration-testing machine, 635
Gearing, three-link, with alternating rotation of driven mangle gear, 49
Geneva wheel and intermittent gear mechanism, combined, with periods of uniform rotation, 356
Geneva wheel mechanism,
external, four-slot, 333
external, four-slot, with locking slot, 354, 359
external, four-slot, oval-pin, 353
external, four-slot, two-pin, 355
external, six-slot, 334
external, six-slot, two-pin, 352
external, three-slot, three-pin, 339
external, twelve-slot, 344
five-slot, with reversible driven gear, 358
four-slot, lever-drive, 345, 347
four-slot, planetary-drive, 346
four-slot, with unequal idle periods, 337
four-slot, with unequal idle periods and unequal rotation periods, 338
inverse, eight-slot, 350
inverse, four-slot, 335
inverse, three-slot, 336, 351
with noncircular gears, 341
six-slot, with locking lever, 342, 343
six-slot, quadruple, 348
sliding-pin, 340
spatial, ten-slot, 361
spherical, four-slot, 360
three-slot, link-gear-drive, 349
Geneva wheel and segment gear mechanism, combined, for intermittent table rotation, 357
Gershgorin, 188
Governor, escapement-type,
of alarm clock, 432
with balance, 431
with pendulum, 431
Grinding attachment mechanism, lever-gear, 275

Harmonic analyzer mechanism, lever-gear, 215
Harmonic analyzer mechanism, slotted-lever-gear, 217
Harmonic-motion plate cam machining mechanism, worm gearing, 514
Head feed mechanism, cam-gear, 475
Helical gearing mechanism with driven slide dwells, 500
Helical grinding attachment mechanism, precision, rack-and-pinion, 650
Helical ribbon forming mechanism, gearing, 649

Helical and worm gearing mechanism with driven wheel dwells, 501
Hoisting pulley mechanism, planetary gearing, 627

Indexing device mechanism, ratchet, 454
Indexing device, rack-and-pinion, 113
Integrator mechanism, lever-gear, 222
Interlocking mechanism, pin-ratchet-wheel, 328
Intermittent gearing mechanism, differential, 610
Intermittent gearing mechanism, planetary, 570
Intermittent rotation mechanism, rack-and-gear, 619
Intermittent rotation mechanism, spatial, pin-wheel, 362

Jack, rack-and-pinion, with ratchet pawl, 115

Level maintaining mechanism, lever-gear, for molten metal in linotype, 269
Lever-gear mechanism,
for adjusting crank throw, 157
for adjusting reciprocating slide position while device is running, 158
with cam slot, 151, 165
with circular and noncircular gears, 149, 169
with circular and noncircular gears and retaining slot, 148
with complex gear, 125
with complex gear and driven link dwell, 126
with complex rack, 124
for converting oscillating motion into variable reversing motion, 166
for doubling slide stroke, 167
with driven slider dwells, 225
with eccentric gear, 170
with noncircular gear and driven link dwell, 228
with noncircular gear and flexible link, 168
with noncircular gear and two dwells, 235
of Roman drive, 150
with round rack, 131
with two cam slots, 164
with two driven link dwells, 226
with uniform driven link motion, 144
for variable reciprocating slide motion, 160
with variable slider motion, 153
Loading mechanism, automatic, bevel gear, 105
Long-dwell mechanism, ratchet-type, 426

Microscope drawtube mechanism, worm gearing and cam, 511
Microscope mechanism, lever-gear, 266
Milling mechanism, cam slot, lever-gear, 272
Multiplier mechanism,
differential, lever-gear, 204
rack-and-pinion, for quadrupling slide travel, 624

Norman, 245

Operating claw mechanism, motion picture camera,
lever-gear, 237, 238, 239
slotted-lever-gear, 236
Oval-turning device mechanism, planetary, slotted-lever-gear, 260
Overload release mechanism, toothed, of flexible coupling, 111
Overload release mechanism, worm gearing, 502
Overrunning mechanism, ratchet, lever-type, 399

Paper length meter mechanism, lever-gear, 267
Paper strip cutting mechanism, planetary, lever-gear, 290
Parallel-crank mechanism,
external planetary, lever-gear, 133
internal planetary, lever-gear, 134, 137
planetary, lever-gear, with fixed sun gear, 132
Pin-rack gearing, lever-gear, 295, 296
Pin-rack mechanism, spiral wheel, 299
Pin-wheel gearing,
bevel, 303, 305
complex rack, 297
external, Reuleaux, 293
face, 301
internal, Reuleaux, 294
spatial, 300
spatial crossed-axes, 304
tapered, Roemer, 302
Pin-wheel mechanism,
internal planetary, 306, 307
with reversible driven gear, 308
with reversing driven wheel, 309
slotted-link, 297
Pin-wheel-rack mechanism with rack dwells, 298
Pinion-and-rack gearing, duplex, four-link, 70
Piston machine mechanism, lever-gear, 250, 251
Planer mechanism, slotted-lever-gear, 280
Planetary gearing mechanism,
of a compensator, 611
of drive pulley mounted on carrier, 559
Fergusson, 549
four-link, of demonstration model, 553
lever-eccentric, 123
with noncircular gears, 568
with one sun and three planet gears, 547
with one sun and two planet gears, 546
reversible, with two brake drums, 555
slotted-link, with two driven link dwells, 122
of three-step drive pulley, 560
with toothed clutch, 566
triple, of an electric hoist, 571
with two driven links, 548, 565
of two-step drive pulley, 557
with worm gearing, 563
Planetary mechanism, lever-gear, 175
with complex driven link motion, 178
with driven link dwells, 231
with driven rocker arm dwells, 230
with noncircular sun gear, 129
with nonuniform driving link velocity, 177
with nonuniform driven shaft velocity, 176
with periodically variable driven link velocity, 181
with straight-slot lever, 142
with two-slot lever, 141
Planetary mechanism, sliding-lever-gear, 173
Planetary mechanism, slotted-lever-gear, 140
with four instantaneous driven link dwells, 232
with short driven link reverse motions, 156
Planimeter mechanism,
external planetary, lever-gear, 211, 213, 214
internal planetary, lever-gear, 212
lever-gear, 216, 223
Plunger mechanism, sewing machine, lever-gear, 269
Printing device mechanism, gear-ratchet, 461
Pulley block mechanism, planetary eccentric-carrier gearing, 632
ulley block mechanism, planetary gearing, 628, 633

Rack-gear mechanism with driven slider dwell, 224, 227
Rack-and-gear mechanism with ratchet wheels, 415

Rack mechanism,
ratchet-tooth, 374, 383
ratchet-tooth, with cylindrical locking element, 438
ratchet-tooth, with sliding locking element, 438
ratchet-type, of a hoist, 442
ratchet-type, of a jack, 449
Rack-and-pinion gearing, duplex, with ratchet wheel, 53
Rack-and-pinion mechanism, double, 618
Rack-and-pinion mechanism, lever-gear, 130
Radial integrimeter mechanism, slotted-lever-gear, 218, 219
Ratchet-gear mechanism,
for periodically variable rotary motion, 417
pin-rack, 413
planetary, 416
planetary, with elastic link, 419-422
Ratchet mechanism,
with ball-type locking elements, 434
cam-driven, 407
of chronometric tachometer, 433
with common latch for several links, 406
for converting reciprocating motion into rotation, 401
double-detent, 434, 435, 436
double-pawl, 397
double-pawl-drive, 412
with elastic link, 402, 403
forked-pawl, pin-wheel, 386
four-pawl-drive, 414
free-wheeling, 410
friction-pawl, 409
friction-rack, 375
with helical slot, 408
internal-tooth, external-pawl, 391
internal-tooth, internal-pawl, 390
lever-gear, with elastic link, 418
lever-pawl, 388
overrunning, internal-tooth, four-pawl, 398
pin-rack, 384
pin-wheel, 387
push-button, 393
rack-type, with complex pawl motion, 392
reversible-pawl, 379, 380, 395
reversible-pawl, internal-tooth, 373
reversible-pawl, pin-rack, 386
reversible-pawl, rack-type, 384
with reversible radial pawl, 405
reversible reciprocating-pawl, 395
rocking-link, 407
roller-pawl, pin wheel, 396
shaped-pawl, pin-wheel, 396
silent, 392
sliding-pawl, 378, 381, 382, 389, 410
sliding-pawl, rack-type, 388
sliding-pawl, with three driving pawls, 405
spatial, with face-type ratchet-wheel, 389
spatial, rack-type, 385
special-tooth, 391
spring-drive, 400
spring-pawl, 373, 383
stepped-pawl, 378
stepped-segment, 380
two-directional, 408, 409
with two driving and one locking pawls, 411
two-wheel, 390
variable-motion, 393
wedge-link, 404
Ratchet-type mechanism,
of a hoist, 441, 443, 444
spatial, of a hoist, 441
triple-pawl, of a hoist, 445, 446
Reciprocating printing roll mechanism, lever-gear, 269
Reducing gear mechanism,
differential, 580
differential bevel, with two driving links, 590
differential high-ratio, spur, 579
differential, with hollow-journal carrier, 577
differential reversible, with braked carrier and drum, 585

Reducing gear mechanism,
differential, with triple toothed clutch, 578
differential, with two pairs of planet gears, 576
differential, with worm wheel segment, 599
planetary, with annular carrier, 554
planetary bevel, with off-axial planet gears, 574
planetary bevel, triple, 573
planetary double, with bevel gears, 562
planetary double, with internal gears, 561
planetary, four-link, with external gearing, 552
planetary, four-link, with idler planet gear, 558
planetary, four-link, with one internal gear, 550
planetary, four-link, with two internal gears, 551
planetary, high-ratio, 564, 575
planetary, with parallel-crank drive, 556
planetary, reversible, 569
planetary reversible, with brake drums, 572
planetary, triple, 567
worm, single-stage, 503
Reel winding mechanism, lever-gear, for typewriter ribbon, 262
Reuleaux, 293, 294
Reversing clutch, toothed, for bevel gearing, 112
Reversing and disengaging clutch mechanism,
planetary bevel gearing, 638
planetary spur gearing, 637
Reversing mechanism,
bevel-gear, clutch-type, 609
gear and screw, of bobbin winding frame, 651
gear-type, 613
planetary, lever-gear, 179
rapid, gear and screw, 620
Revolution counter mechanism,
precision, ratchet, 453
worm gearing, 506, 508
Revyakin, 455
Rifling device mechanism, gun barrel, lever-gear, 284
Roemer, 302
Roll mechanism, lever-gear, 276
Rope spinning mechanism, planetary gearing, 647

Safety clutch mechanism,
lever-gear, 255
ratchet-tooth, 379
Saw mechanism, planetary, lever-gear, 263
Screw-conveyer drive, bevel-gear, three-link, 104
Screw and gear mechanism,
four-link, 75
four-link for telescopic gearing, 73
planetary, four-link, 74
Scotch-yoke mechanism,
complex, lever-gear, with adjustable rod stroke, 163
lever-gear, with adjustable slider stroke, 162
lever-gear, with approximately uniform slider motion, 161
lever-gear, with circular and noncircular gears, 145
lever-gear, with elliptical gear, 147
planetary-gear, cardan-type, 121
planetary, lever-gear, 174
planetary, lever-gear, with approximate driven link dwell, 234
planetary, lever-gear, with driven link stroke adjustment, 180
planetary, lever-gear, with long driven link dwells, 233
Setting mechanism, gear-type, 615
Shutter exposure adjustment, escapement-type, 432
Shuttle mechanism, lever-gear, 264
Sifter mechanism,[1] lever-gear, with elastic links, 252
Slay mechanism, planetary, lever-gear, 287
Slider-crank mechanism,
differential, lever-gear, 172

Slider-crank mechanism,
external planetary, lever-gear, 128
internal planetary, lever-gear, 135
planetary, lever-gear, 155
planetary, lever-gear, Watt, 139
with segment gear and rack, 142
with uniform slider motion, 154
Slider-drive mechanism, lever-gear, 152
Slotted-lever-gear mechanism,
for converting rotation into oscillation, 159
with driven link dwell, 229
with driven link stroke adjustment, 258
with segment gear, 146
with two circular gears, 140
Slotter mechanism, rack-and-pinion, 279
Speed-changing mechanism, toothed, multiple crown-gear and shifting pinion, 66
Speed governor mechanism, ratchet-type,
of clockwork, with frictional-rest escapement, 428
of clockwork, with pin pallet escapement, 429
with elastic link, 430
Spindle feed mechanism, cam-gear, 473
Spiral-engagement gearing, three-link, with helical link motion, 65
Spiral ratchet wheel mechanism, 381
Sprocket cutting fixture, pin-wheel, 366
Spur and bevel gearing mechanism with variable transmission ratio, 614
Spur gearing mechanism of a differential,
with external gears, 584
with one internal gear, 582
with two internal gears, 583
Steering gear mechanism, automobile, worm gearing, 511
Stereoscope mechanism, lever-gear, 277
Stop device, toothed,
differential, three-link, for watches, 118
planetary, three-link, for watches, 116
Straight-line mechanism,
approximate, lever-gear, 241, 242
exact, lever-gear, 243
lever-gear, Norman, 245
planetary, lever-gear, 244
Straight-line press mechanism, planetary, lever-gear, 240
Strain wave gearing mechanism,
coaxial double, with ball-type wave generator, 603
coaxial double, with cam-type wave generator, 602
coaxial double, two-stage, with elliptical wave generator, 605
coaxial triple, with ball-type wave generator, 607
coaxial triple, with internal roller wave generator, 608
coaxial triple, with roller wave generator, 606
Swinging fan mechanism, worm-lever, 495
Switch mechanism, ratchet-type, 452
Switching mechanism, lever-gear, 257
Swivelling mechanism, differential gearing, for aircraft propeller blades, 645

Tachometer mechanism, lever-gear, 248
Tachoscope mechanism, cam-gear, 478
Tangent generator, screw-gear, 203
Tester mechanism, involute profile, lever-gear, 282
Tongs mechanism, lever-gear, with gear segments, 253
Toothed gearing, bevel,
planetary, three-link, with circular pinion and crown gear, 61
three-link, with alternating driven link rotation, 84
three-link, with circular pinion and crown gear, 58

Toothed gearing, circular,
external bevel, planetary, three-link, 59
external bevel, three-link, 56
external, planetary, three-link, 35
external, three-link, 33
internal bevel, planetary, three-link, 60
internal bevel, three-link, 57
internal planetary, three-link, 36
internal, three-link, 33
skew bevel, three-link, 62
Toothed gearing,
complex rack-and-pinion, three-link, 50
duplex rack-and-pinion, three-link, 50
duplex rack-and-pinion, three-link, with safety cams, 51
duplex rack-and-pinion, three-link, with safety teeth, 52
four-link, for driving two non-parallel racks, 70
intermittent, four-link, 74
intermittent, three-link, with dwells and circular locking feature, 89
internal, three-link, with straight-profile gears, 34
noncircular spiral, three-link, 37
nonreversible, rack-and-pinion, 55
oscillating, rack-and-pinion, three-link, 54
planetary, rack-and-pinion, three-link, 37
rack-and-pinion, three-link, 34
round rack-and-pinion, three-link, 51
spatial, three-link, with circular gears, 63
spatial, three-link, with driven link dwells and grooved locking feature, 80
Toothed gearing, three-link,
with intermittent driven link rotation, 94
with alternating rotation of driven composite gear, 48
with alternating rotation of driven gear, 42, 46
with circular-eccentric and non-circular gears, 38, 39, 40
with curvilinear oscillating rack and eccentric circular pinion, 52
with double-rim circular and noncircular gears, 45
with driven gear dwells, 76, 86
with driven gear dwells and circular locking feature, 90, 92, 93, 96
with driven gear dwells and circular transition and locking feature, 91
with driven gear dwells and locking ring, 85
with driven gear dwell and swinging gear sector, 95
with driven gear dwells and rolling levers, 82
with driven gear dwells and rolling and sliding levers, 81
with driven gear dwells and shock-absorbing spider, 83
for driving parallel racks, 54
with four-stage transmission ratio, 47
with helical pinion and scroll gear, 64
with intermittent driven gear rotation, 87
with intermittent rack motion, 76
with short driven gear dwells, 86
with spherical engagement, 69
spiral-face-bevel, 67, 68
with stepwise rack motion, 77
with three-stage transmission ratio, 44
with two-stage transmission ratio, 43
with uniform intermittent driven link motion, 84, 97
with variable intermittent driven link motion, 98
Toothed rack mechanism, gear-lever, four-link, with two driven segment gears, 72
Tracing mechanism,
double-eccentric, lever-gear, for connecting-rod curves, 182

Tracing mechanism,
lever-gear, Artobolevsky, for pedal curves of cycloids of circles, 191, 192, 193
lever-gear, for complex connecting-rod curves, 195-199
lever-gear, for curves from their projections, 185
lever-gear, with curvilinear slotted link for connecting-rod curves, 183
lever-gear, Gershgorin, for ellipses, 188
lever-gear, for hyperbolas, 187
lever-gear, for portions of cubic parabolas, 190
lever-gear, for portions of parabolas, 189
lever-gear, for sine curves, 186
lever-gear, for sinusoid-type curves, 184
Scotch-yoke, planetary, lever-gear, for ovals, 201
slotted-lever-gear, for complex connecting-rod curves, 194, 200
toothed planetary, three-link, for cardioids, 101
toothed planetary, three-link, for ellipses, 100
toothed planetary, three-link, for epicycloids, 99
toothed planetary, three-link, for prolate cardioids, 102
toothed, three-link, for cycloids, 102
Typewriter carriage shifting mechanism, ratchet, 458

Ustsov, 254

Vane-type governor mechanism, worm gearing, of telegraph apparatus, 510
Variable-throw crank with toothed locking device, 108
Vibration table mechanism, slider-gear, 252

Warp feeding mechanism, pin-wheel, from warp beam to harness, 367
Washing machine mechanism, cam-gear, 480
Washing machine mechanism, lever-gear, 278
Watt, 139
Windshield wiper mechanism, automobile, lever-gear, 279
Wire coiler mechanism, worm and screw, 509
Wire feeding mechanism, ratchet-type, 447
Wobble-plate mechanism, spatial differential, 596
Work feeding mechanism, Geneva wheel, 364
Worm and bevel gearing mechanism of a differential, 589
Worm-gear mechanism,
for alternate intermittent parallel shaft rotation, 499
of a differential, 600, 601
for intermittent driven shaft rotation, 497
Worm gearing,
with alternately driven worms, 496
double-crown-gear, 490
double face-type pin-wheel, 492
double-wheel, 491
with driving worm wheel, 489
face-type pin-wheel, 488
hourglass, pin-wheel, 487
hourglass, three-link, 486
intermittent, triple-wheel, 498
three-link, 485
three-speed, 489
triple-wheel, 493
with worm disengagement, 502
Worm-lever gearing,
with sliding shaft, 494
with sliding worm, 494
Wrapper smoothing mechanism, lever-gear, over tapered ends of cigars, 261

To the Reader

Mir Publishers would be grateful for your comments on the content, translation and design of this book. We would also be pleased to receive any other suggestions you may wish to make.

Our address is:
USSR, 129820, Moscow I-110, GSP
Pervy Rizhsky Pereulok 2
Mir Publishers

Printed in the Union of Soviet Socialist Republics